Test report

Test Request By:	Bel Fuse Limited		
Tested Product Name:	0AKM Fuse	**Date of Received:**	2019/08/06
Type Designation:	0AKM 60A 0AKM 80A	**Serial No:**	Engineering Sample
Test Specification:	Qualification Test, refer to JSAE JASO D622		
Test Place:			
Test Result:	The tested sample mentioned above **Pass** the testing according to test specification		
Test By:		**Review By:** **:**	
Date:	2019/08/06	**Date:**	2019/08/30
Others: Qualification Test for 0AKM Series			

Confidential and Proprietary:
This is an unpublished work. The disclosure of this work is limited to selected person only. Further dissemination or disclosure to the public is PROHIBITED. And all rights thereunder are reserved to BEL Ltd.

TEST PLAN

No.	Group	Test item	Testing according to	Type name	Quantity	Test condition	Acceptable Value/Range
1	0	DCR	UL248-1	0AKM 60A 0AKM 80A	12pcs	Surrounding environment: 23+/ -5℃, measuring current <=10% rated current, test point: fuse cap	Test data
2	A	Temperature rise	I SO8820-8 JASO D622	0AKM 60A 0AKM 80A	2pcs from Item 1	Surrounding environment: 23+/ -5℃, measuring current 0.5In	<50K
3	B	Temperature /humidity cycling	JASO D622 6.3.4.1	0AKM 60A 0AKM 80A	2pcs from Item 1	10 temperature/humidity cycles per standard in a constant temperature and humidity chamber	No appearance damage，Rc < 10%
4	B	Hot / cold shock test	JASO D622 6.3.6	0AKM 60A 0AKM 80A	2pcs from Item 1	48 cycles，-30°C-100°C；	No appearance damage，Rc < 10%
5	B	High temperature storage	Bel Spec.	0AKM 60A 0AKM 80A	2pcs from Item 1	125℃ for 100 hours	No appearance damage，Rc < 10%
6	B	Mechanical shock	JASO D622 6.3.3	0AKM 60A 0AKM 80A	2pcs from Item 1	Ambient temperature: 23+ -5℃, fixed fuse in vibration tester, 10-55hz, sinusoidal, peak value 1.5mm; One way 2 hours, three ways	No appearance damage，Rc < 10%
7	B	Impulse current cycle test	Refer to JASO D622 6.3.2	0AKM 60A 0AKM 80A	2pcs from Item 1	Ambient temperature: 23+ -5 ℃ , impulse current 2In/0.25s and 0.5In/ 15s for one cycle, total 50,000 cycles.	No appearance damage，Rc < 10%
8	B	Wipe with Gasoline oil	Refer to GB/T31465.1-5.4	0AKM 60A 0AKM 80A	All the above tested samples	Wipe the tubes with gasoline / lube for 30s each,	Marking will be indelible and easily legible
9	B	Terminal strength test	JASO D622 ISO8820-8	0AKM 60A 0AKM 80A	All the above tested samples	Disassemble the fuse with 4.5+/-1Nm (M5)	Terminal remains physically intact after three times disassemble

Confidential and Proprietary:
This is an unpublished work. The disclosure of this work is limited to selected person only. Further dissemination or disclosure to the public is PROHIBITED. And all rights thereunder are reserved to BEL Ltd.

Content

1. **PURPOSE** ..... ERROR! BOOKMARK NOT DEFINED.

2. **TEST EQUIPMENT** ..... ERROR! BOOKMARK NOT DEFINED.

3. **TEST EQUIPMENT AND SCHEME** ..... ERROR! BOOKMARK NOT DEFINED.

4. **TEST RESULT** ..... ERROR! BOOKMARK NOT DEFINED.

4.1. Initial test test results ..... **Error! Bookmark not defined.**

4.1.1 DCR (No.1) 5

4.2. Electrical test results group A ..... **Error! Bookmark not defined.**

4.2.1 Temperature rise (No. 2) 6

4.3. Reliability test results group B ..... **Error! Bookmark not defined.**

4.3.1 Temperature /humidity cycling test result(No. 3) 7

4.3.2 Hot / cold shock test result (No. 4) 8

4.3.3 High temperature storage test result (No. 5) 9

4.3.4 Mechanical shock test result (No. 6) 10

4.3.5 Impulse current cycle test result(No. 7) 11

4.3.6 Test result of wiping the tubes with gasoline / lube, (No. 8) 12

4.3.7 Terminal strength test 12

5. TEST IMAGE ..... ERROR! BOOKMARK NOT DEFINED.

Confidential and Proprietary:
This is an unpublished work. The disclosure of this work is limited to selected person only. Further dissemination or disclosure to the public is PROHIBITED. And all rights thereunder are reserved to BEL Ltd.

1. Purpose

Verify the electrical and reliability of the product.

2. Test equipment

Equipment	Type	Manufacturer
Multimeter	34401A	Agilent
Programmable DC Power supply	PST-3201	GW
Programmable DC Power Supply	PSM-3004	GW
mOHM meter	1154D	DHK
Current Shunt	2M-05	T&M Research
Oscilloscope	TDS5104B	Tektronix
DC electronic Load	63209	Chroma
Electric vibration system	RT-S50ZY	SZZL
Power Supply	6V3000A	YST
Temperature Measurement	40032	TH
Temperature/Humidity Chamber	RHP-150CT	REALE
Thermal Shock Chamber	TSA-71H-W	REALE

Confidential and Proprietary:
This is an unpublished work. The disclosure of this work is limited to selected person only. Further dissemination or disclosure to the public is PROHIBITED. And all rights thereunder are reserved to BEL Ltd.

3. Test equipment and scheme

The test was conducted according to the test scheme of 0AKM_Test_Report_2019. Mark the sample number (sample number from 1-12) and use the same sample to test all items in the test plan.

4. Test result

4.1.1 Initial test result

4.1.2 DCR (No. 1)

Test result **pass**

Table 1 0AKM 60A (No. 1)

Type:	**Error! Reference source not found.**						
Start date:	2019/08/06			Finish date:	2019/08/06		
Room temperature:	24.7℃			Room humidity.	63%		
No.\ Item	DCR	Visual		No.\ Item	DCR	Visual	
Unit:	mΩ			Unit:	mΩ		
Maximum：				Maximum：			
Minimum:		No appearance damage		Minimum:		No appearance damage	
1	1.597	pass		7	1.591	pass	
2	1.586	pass		8	1.569	pass	
3	1.578	pass		9	1.578	pass	
4	1.586	pass		10	1.591	pass	
5	1.566	pass		11	1.596	pass	
6	1.568	pass		12	1.582	pass	

Table 2 0AKL 30A (No. 1)

Type:	**Error! Reference source not found.**						
Start date:	2019/08/06			Finish date:	2019/08/06		
Room temperature:	24.7℃			Room humidity.	63%		
No.\ Item	DCR	Visual		No.\ Item	DCR	Visual	
Unit:	mΩ			Unit:	mΩ		

Confidential and Proprietary:
This is an unpublished work. The disclosure of this work is limited to selected person only. Further dissemination or disclosure to the public is PROHIBITED. And all rights thereunder are reserved to BEL Ltd.

Maximum：				Maximum：			
Minimum:		No appearance damage		Minimum:		No appearance damage	
1	1.012	pass		7	1.024	pass	
2	1.007	pass		8	1.022	pass	
3	1.014	pass		9	1.010	pass	
4	1.011	pass		10	1.016	pass	
5	1.024	pass		11	1.009	pass	
6	1.015	pass		12	1.018	pass	

4.2. Electrical test result group A

4.2.1 Temperature rise (No. 2)

Test result: **pass**

Table 3 0AKL 20A (No. 2)

Type	0AKM 60A		
Start date:	2019/08/07	Finish date:	2019/08/07
Room temperature .	24.5℃	Room Humidity.	51%

No.\ Item	Temperature rise @0.5In	Visual					
Unit:	K						
Maximum：	50						
Minimum:		No appearance damage					
1	20.5	pass					
2	19.1	pass					

Table 4 0AKL 30A (No. 2)

Type	0AKM 80A		
Start date:	2019/08/07	Finish date:	2019/08/07

Confidential and Proprietary:
This is an unpublished work. The disclosure of this work is limited to selected person only. Further dissemination or disclosure to the public is PROHIBITED. And all rights thereunder are reserved to BEL Ltd.

Room temperature.	24.5℃			Room Humidity.	51%		
No.\ Item	Temperature rise @0.5In	Visual					
Unit:	K						
Maximum：	50						
Minimum:		No appearance damage					
1	24.3	pass					
2	23.6	pass					

4.3. Reliability test result group B

4.3.1 Temperature /humidity cycling test result(No. 3)

10 temperature-humidity cycles according the following setting and 24 hours per cycle

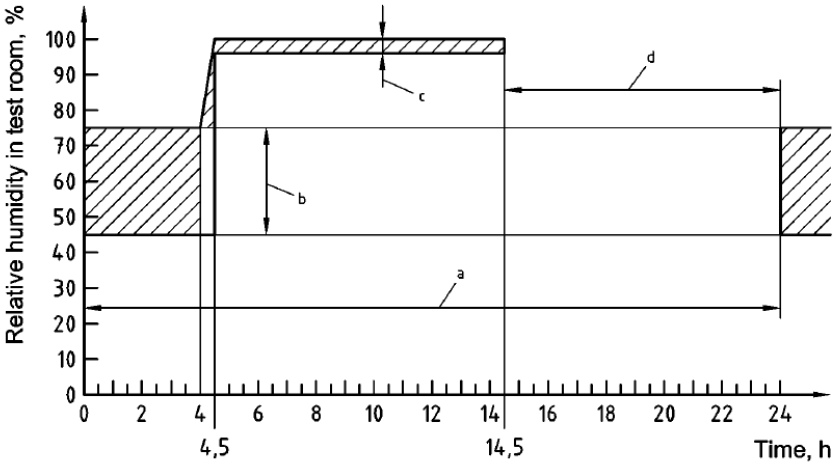

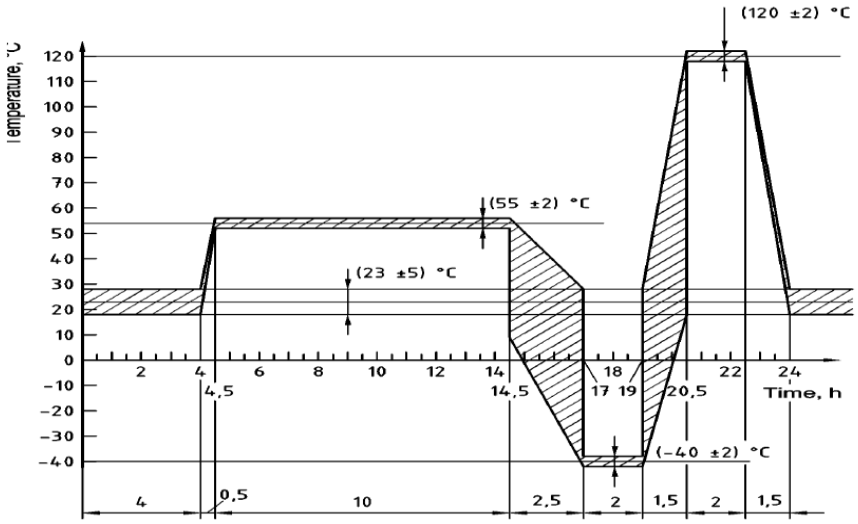

Confidential and Proprietary:
This is an unpublished work. The disclosure of this work is limited to selected person only. Further dissemination or disclosure to the public is PROHIBITED. And all rights thereunder are reserved to BEL Ltd.

Test result: **pass**

Table 5 Error! Reference source not found. (No. 3)

Type:	0AKM 60A						
Start date:	2019/08/06			Finish date:	2019/08/19		
Room temperature..:	24.8℃			Room Humidity.	58%		
No.\ Item	DCR	Visual					
Unit:	mΩ						
Maximum:							
Minimum:		No appearance damage					
3	1.593	pass					
4	1.606	pass					

Table 6 Error! Reference source not found. (No. 3)

Type:	0AKM 80A						
Start date:	2019/08/06			Finish date:	2019/08/19		
Room temperature..:	24.8℃			Room Humidity.	58%		
No.\ Item	DCR	Visual					
Unit:	mΩ						
Maximum:							
Minimum:		No appearance damage					
3	1.022	pass					
4	1.021	pass					

4.3.2 Hot / cold shock test result (No. 4))

48 cycles of hot / cold shock and the condition of single cycle as the following:

1. -30+/-2℃ continued 30min;
2. Switching time 15s maximum;
3. 100+/-2℃ continued 30min;
4. Switching time 15s maximum;

Test result: **pass**

Confidential and Proprietary:
This is an unpublished work. The disclosure of this work is limited to selected person only. Further dissemination or disclosure to the public is PROHIBITED. And all rights thereunder are reserved to BEL Ltd.

Table 7 **Error! Reference source not found.**(No. 4)

Type:	**Error! Reference source not found.**						
Start date:	2019/08/09			Finish date:	2019/08/14		
Room temperature.	25.1℃			Room humidity.	59%		
No.\ Item	DCR	Visual					
Unit:	mΩ						
Maximum：							
Minimum:		No appearance damage					
5	1.584	pass					
6	1.587	pass					

Table 8 **Error! Reference source not found.**(No. 4)

Type:	**Error! Reference source not found.**						
Start date:	2019/08/09			Finish date:	2019/08/14		
Room temperature.	25.1℃			Room humidity.	59%		
No.\ Item	DCR	Visual					
Unit:	mΩ						
Maximum：							
Minimum:		No appearance damage					
5	1.033	pass					
6	1.026	pass					

4.3.3 High temperature storage test result (No. 5)

Test result: **Pass**

Confidential and Proprietary:
This is an unpublished work. The disclosure of this work is limited to selected person only. Further dissemination or disclosure to the public is PROHIBITED. And all rights thereunder are reserved to BEL Ltd.

Table 9 **Error! Reference source not found.** (No. 5)

Type:	0AKM 60A						
Start date:	2019/08/12			Finish date:	2019/08/19		
Room temperature.	24.6℃			Room humidity.	66%		
No.\ Item	DCR	Visual					
Unit:	mΩ						
Maximum:							
Minimum:		No appearance damage					
7	1.601	pass					
8	1.582	pass					

Table 10 **Error! Reference source not found.** (No. 5)

Type:	0AKM 80A						
Start date:	2019/08/12			Finish date:	2019/08/19		
Room temperature.	24.6℃			Room humidity.	66%		
No.\ Item	DCR	Visual					
Unit:	mΩ						
Maximum:							
Minimum:		No appearance damage					
7	1.030	pass					
8	1.028	pass					

4.3.4 Mechanical shock test result (No. 6)

Test result: **Pass**

Table 11 **Error! Reference source not found.** (No. 6)

Type:	**Error! Reference**

Confidential and Proprietary:
This is an unpublished work. The disclosure of this work is limited to selected person only. Further dissemination or disclosure to the public is PROHIBITED. And all rights thereunder are reserved to BEL Ltd.

	source not found.		
Start date:	2019/08/21	Finish date::	2019/08/26
Room temperature.	24.8℃	Room humidity.	57%

No.\ Item	DCR	visual					
Unit:	mΩ						
Maximum:							
Minimum:		No appearance damage					
9	1.595	pass					
10	1.609	pass					

Table 12 **Error! Reference source not found.** (No. 6)

Type:	**Error! Reference source not found.**		
Start date:	2019/08/21	Finish date::	2019/08/26
Room temperature.	24.8℃	Room humidity.	57%

No.\ Item	DCR	visual					
Unit:	mΩ						
Maximum:							
Minimum:		No appearance damage					
9	1.019	pass					
10	1.025	pass					

4.3.5 Impulse current cycle test result(No. 7)

Test result: **Pass**

Table 13 **Error! Reference source not found.** (No. 7)

Type:	**Error! Reference source not found.**		
Start date::	2019/08/10	Finish date:	2019/08/22
Room temperature.	25.3℃	Room humidity.	63%

Confidential and Proprietary:
This is an unpublished work. The disclosure of this work is limited to selected person only. Further dissemination or disclosure to the public is PROHIBITED. And all rights thereunder are reserved to BEL Ltd.

No.\ Item	DCR	Visual					
Unit:	mΩ						
Maximum：							
Minimum:		No appearance damage					
11	1.611	pass					
12	1.598	pass					

Table 14 **Error! Reference source not found.** (No. 7)

Type:	**Error! Reference source not found.**						
Start date::	2019/08/10			Finish date:	2019/08/22		
Room temperature.	25.3℃			Room humidity.	63%		
No.\ Item	DCR	Visual					
Unit:	mΩ						
Maximum：							
Minimum:		No appearance damage					
11	1.021	pass					
12	1.027	pass					

4.3.6 Test result of wiping the tubes with gasoline / lube, (No. 8)

*Gasoline is GB #92, lubricating oil is synthetic oil.

Test result: **Pass**

Table 15 **Error! Reference source not found.** (No. 8)

Type:	0AKM 60A						
Start date::	2019/08/28			Finish date:	2019/08/28		
Room temperature.	25.2℃			Room humidity.	62%		
No.\ Item	Marking can be recognized		No.\ Item	Marking can be recognized			
Unit:			Unit:				
Maximum：			Maximum：：				

Confidential and Proprietary:
This is an unpublished work. The disclosure of this work is limited to selected person only. Further dissemination or disclosure to the public is PROHIBITED. And all rights thereunder are reserved to BEL Ltd.

Minimum::			Minimum::				
1	pass		7	pass			
2	pass		8	pass			
3	pass		9	pass			
4	pass		10	pass			
5	pass		11	pass			
6	pass		12	pass			

Table 16 **Error! Reference source not found.** (No. 8)

Type:	0AKM 80A						
Start date::	2019/08/28			Finish date:	2019/08/28		
Room temperature.	25.2℃			Room humidity.	62%		
No.\ Item	Marking can be recognized		No.\ Item	Marking can be recognized			
Unit:			Unit:				
Maximum：			Maximum：：				
Minimum::			Minimum::				
1	pass		7	pass			
2	pass		8	pass			
3	pass		9	pass			
4	pass		10	pass			
5	pass		11	pass			
6	pass		12	pass			

4.3.7 Terminal strength test, (No. 9)

*Gasoline is GB #92, lubricating oil is synthetic oil.

Test result: **Pass**

Table 1 Error! Reference source not found. (No. 9)

Type:	0AKM 60A		
Start date:	2019/08/09	Finish date:	2019/08/26
Room temperature.	25.7℃	Room humidity.	67%

Confidential and Proprietary:
This is an unpublished work. The disclosure of this work is limited to selected person only. Further dissemination or disclosure to the public is PROHIBITED. And all rights thereunder are reserved to BEL Ltd.

No.\ Item	Times of disassembling	Visual		No.\ Item	Times of disassembling	Visual	
Unit:				Unit:			
Maximum：				Maximum：			
Minimum:	3	No appearance damage		Minimum:	3	No appearance damage	
1	>3	pass		7	>3	pass	
2	>3	pass		8	>3	pass	
3	>3	pass		9	>3	pass	
4	>3	pass		10	>3	pass	
5	>3	pass		11	>3	pass	
6	>3	pass		12	>3	pass	

Table 2 Error! Reference source not found. (No. 9)

Type:	0AKM 80A		
Start date:	2019/08/09	Finish date:	2019/08/26
Room temperature.	25.7℃	Room humidity.	67%

No.\ Item	Times of disassembling	Visual		No.\ Item	Times of disassembling	Visual	
Unit:				Unit:			
Maximum：				Maximum：			
Minimum:	3	No appearance damage		Minimum:	3	No appearance damage	
1	>3	pass		7	>3	pass	
2	>3	pass		8	>3	pass	
3	>3	pass		9	>3	pass	
4	>3	pass		10	>3	pass	
5	>3	pass		11	>3	pass	
6	>3	pass		12	>3	pass	

Confidential and Proprietary:
This is an unpublished work. The disclosure of this work is limited to selected person only. Further dissemination or disclosure to the public is PROHIBITED. And all rights thereunder are reserved to BEL Ltd.

5. Test image

Image 1, Mechanical shock curve

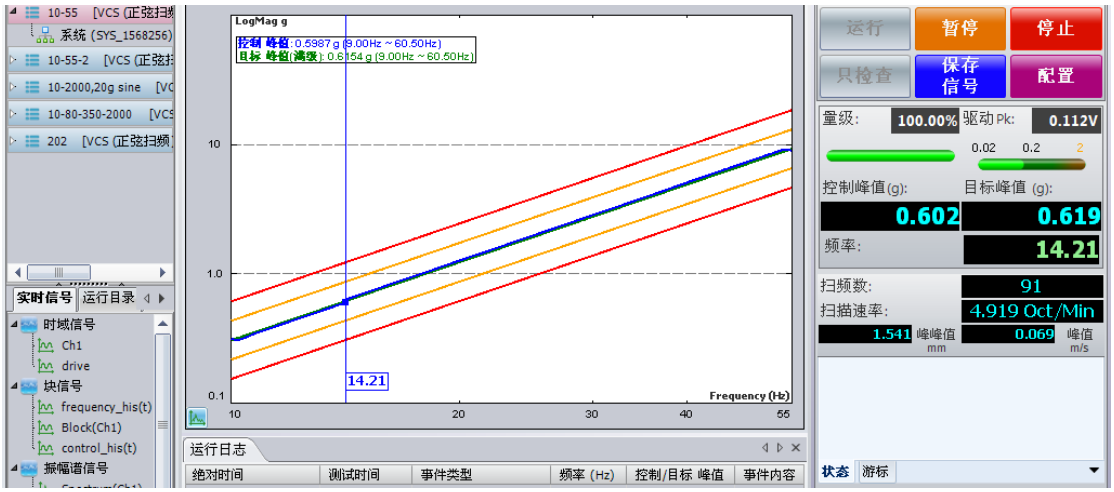

Image 2, Hot -cold shock curve

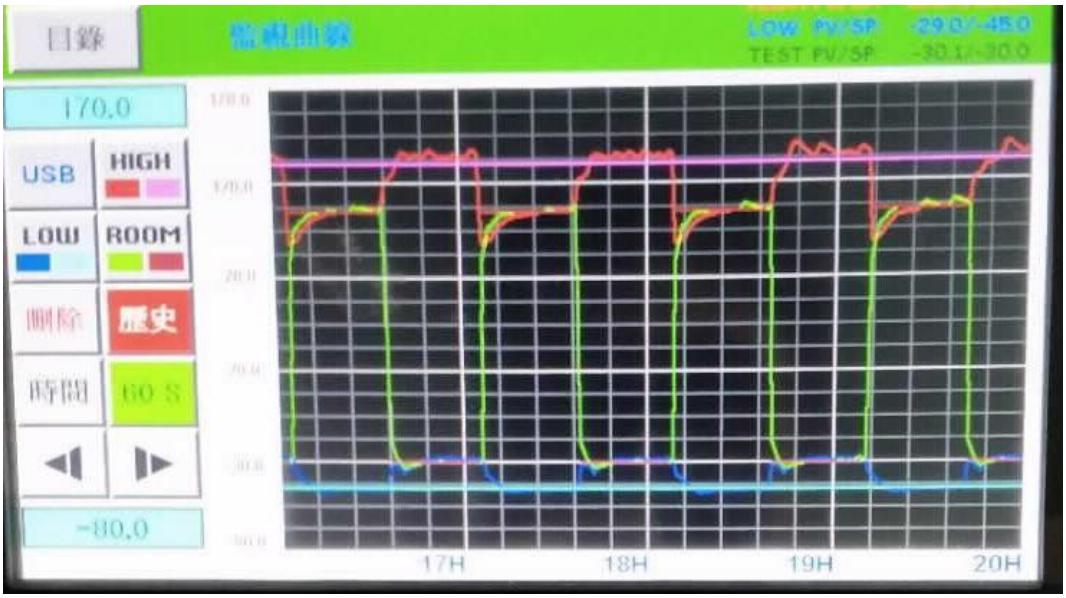

Image 3, Temperature-humidity cycling curve

Confidential and Proprietary:
This is an unpublished work. The disclosure of this work is limited to selected person only. Further dissemination or disclosure to the public is PROHIBITED. And all rights thereunder are reserved to BEL Ltd.

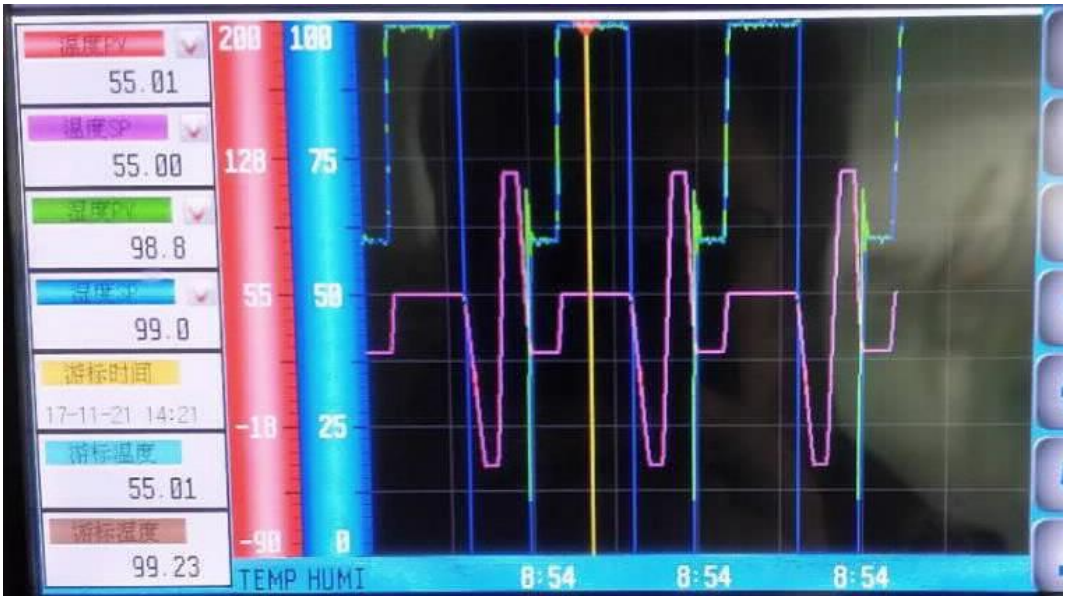

Confidential and Proprietary:
This is an unpublished work. The disclosure of this work is limited to selected person only. Further dissemination or disclosure to the public is PROHIBITED. And all rights thereunder are reserved to BEL Ltd.