THE INFORMATION CONTAINED HEREIN IS CONSIDERED "PROPRIETARY" TO BEL FUSE INC. AND SHALL NOT BE COPIED, REPRODUCED OR DISCLOSED WITHOUT THE WRITTEN APPROVAL OF BEL FUSE INC.

LED1 POLARITY			LED2 POLARITY			
PIN 13	PIN 14	COLOR	PIN 15	PIN 16	PIN 17	COLOR
−	+	YELLOW	−	+		ORANGE
				+	−	GREEN

RoHS

ELECTRICAL CHARACTERISTICS @ 25°C

TURNS RATIO

TP1	1CT : 1CT ±2%
TP2	1CT : 1CT ±2%
TP3	1CT : 1CT ±2%
TP4	1CT : 1CT ±2%

OCL @ 100kHz/100mVRMS

8mA DC BIAS (0°C – 70°C)	180 µH MIN.
19mA DC BIAS (0°C – 70°C)	120 µH MIN.

INS. LOSS

1MHz TO 150MHz	-0.004(fMHz)-0.4 dB MAX

RET. LOSS

1MHz-40MHz	-20 dB MIN
40.1MHz-150MHz	-20+15LOG(f/40MHZ) dB MIN

CROSSTALK

1MHz – 40MHz	-35 dB MIN
40.1MHz-150MHz	-35+15LOG(f/40MHZ) dB MIN

CM TO CM REJ

1MHz – 150MHz	-25 dB MIN

HIPOT (Isolation Voltage): 2250 VDC

100% OF PRODUCTION TESTED TO COMPLY WITH IEEE 802.3 ISOLATION REQUIREMENTS.

OPERATING TEMPERATURE: 0°C TO +70°C

LED 1

VF (FORWARD VOLTAGE)	IF=20mA	YELLOW	2.1V TYP.
λD (DOMINANT WAVELENGTH)	IF=20mA	YELLOW	590nm TYP.

LED 2

VF (FORWARD VOLTAGE)	IF=20mA	GREEN	2.2V TYP.
		ORANGE	2.0V TYP.
λD (DOMINANT WAVELENGTH)	IF=20mA	GREEN	570nm TYP.
		ORANGE	605nm TYP.

SCHEMATIC

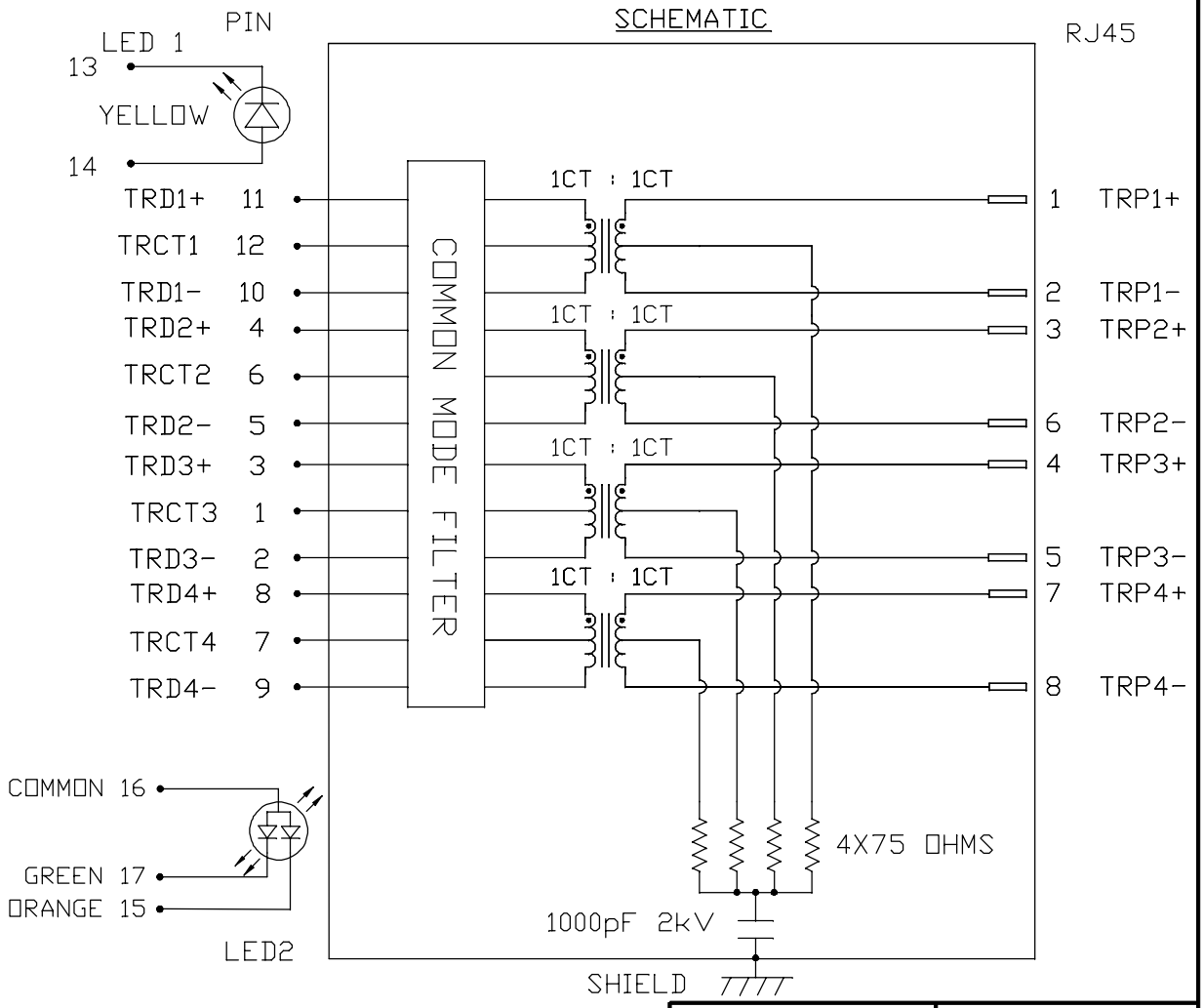

REV. : A | PAGE : 2

ORIGINATED BY CHOW WANCHUNG DATE 2016-09-02	TITLE 2.5 Gigabit MagJack® (Ultra Low Profile) PATENTED	PART NO. / DRAWING NO. L829-1J1T-JM	STANDARD DIM. TOL. IN INCH .X .XX .XXX	[ ] METRIC DIM. AS REF. UNIT : INCH [mm] SCALE : N/A SIZE : A4
DRAWN BY LIN FENG LI DATE 2016-09-02		FILE NAME L829-1J1T-JM_A.DWG		

bel MAGNETIC SOLUTIONS
a bel group

This document is electronically generated. This is a controlled copy if used internally
Please read our datasheet & drawing disclaimer here.

THE INFORMATION CONTAINED HEREIN IS CONSIDERED "PROPRIETARY" TO BEL FUSE INC. AND SHALL NOT BE COPIED, REPRODUCED OR DISCLOSED WITHOUT THE WRITTEN APPROVAL OF BEL FUSE INC.

MECHANICAL SPECIFICATION

RoHS

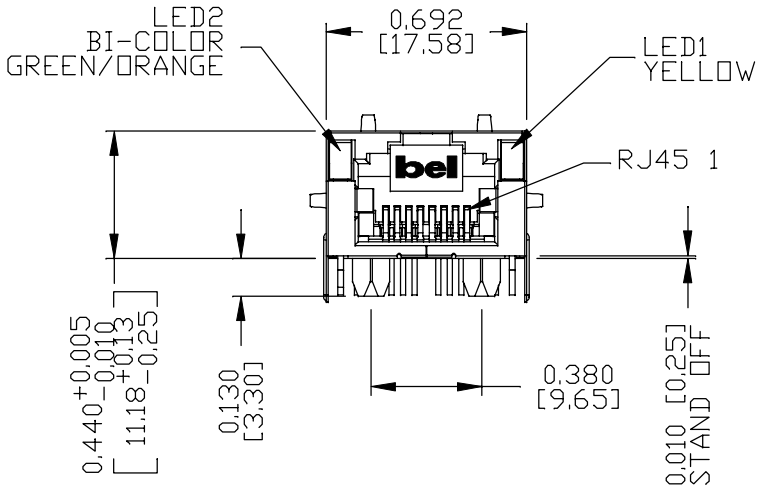

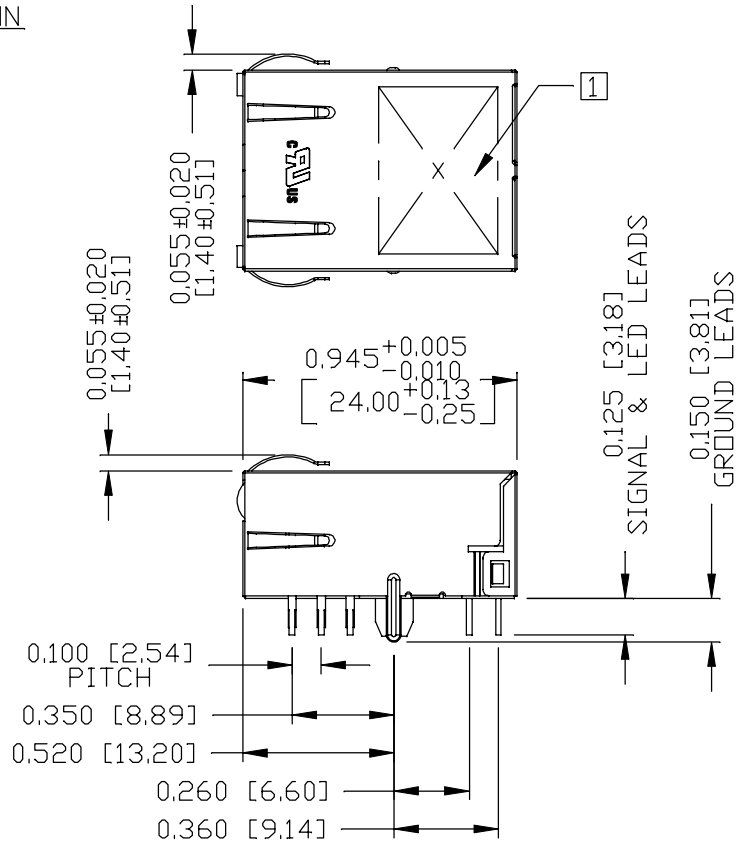

NOTES:

PLASTIC HOUSING: THERMOPLASTIC PA, BLACK
FLAMMABILITY RATING UL 94V-0

CONTACTS: 30 MICRO-INCH HARD GOLD PLATING OR EQUIVALENT.
30 MICRO-INCH MIN NICKEL UNDERPLATE.

OUTPUT PINS: TIN-COATED COPPER WIRE, DIA 0.018 INCH.
100 MICRO-INCH MIN MATTE TIN. PINS ARE SOLDER DIPPED.

METAL SHIELD: NICKEL PLATED ON COPPER ALLOY.
(ALL GROUND LEADS ARE SOLDER DIPPED)

1. MARK PART WITH MFG. LOGO, MFG. NAME, PART NUMBER, DATE CODE AND PATENTED.
2. THE PRODUCT IS RoHS COMPLIANT.
   c UL us UL RECOGNIZED - FILE #E196366 AND E169987.
3. JACK CAVITY CONFORMS TO FCC RULES AND REGULATIONS, PART 68 SUBPART F.
4. THE PRODUCT IS PATENTED. THE PATENT NUMBER ARE U.S PAT. 7,123,117 AND U.S PAT. 6,840,817.
5. THE PART IS RECOMMENDED FOR WAVE SOLDERING. THE SUGGESTED PEAK WAVE SOLDERING CONDITION IS 260°C MAX AND 10 SECONDS MAX.

ORIGINATED BY ANTON LIAO DATE 2016-09-02	TITLE 2.5 Gigabit MagJack® (Ultra Low Profile) PATENTED	PART NO. / DRAWING NO. L829-1J1T-JM	STANDARD DIM. TOL. IN INCH	[ ] METRIC DIM. AS REF.	REV. : A / PAGE : 3
DRAWN BY LIU DONGJUN DATE 2016-09-02		FILE NAME L829-1J1T-JM_A.DWG	.X / .XX / .XXX ±0.010	UNIT : INCH [mm] SCALE : N/A SIZE : A4	bel MAGNETIC SOLUTIONS a bel group

This document is electronically generated. This is a controlled copy if used internally

THE INFORMATION CONTAINED HEREIN IS CONSIDERED "PROPRIETARY" TO BEL FUSE INC. AND SHALL NOT BE COPIED, REPRODUCED OR DISCLOSED WITHOUT THE WRITTEN APPROVAL OF BEL FUSE INC.

RoHS

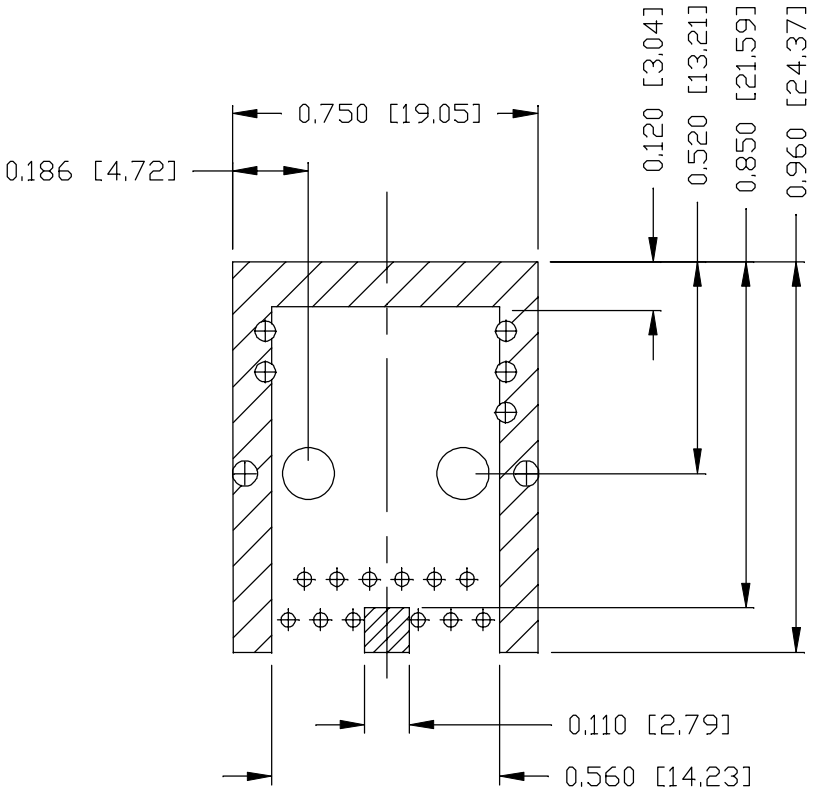

RECOMMENDED PCB FOOTPRINT

COMPONENT SIDE VIEW

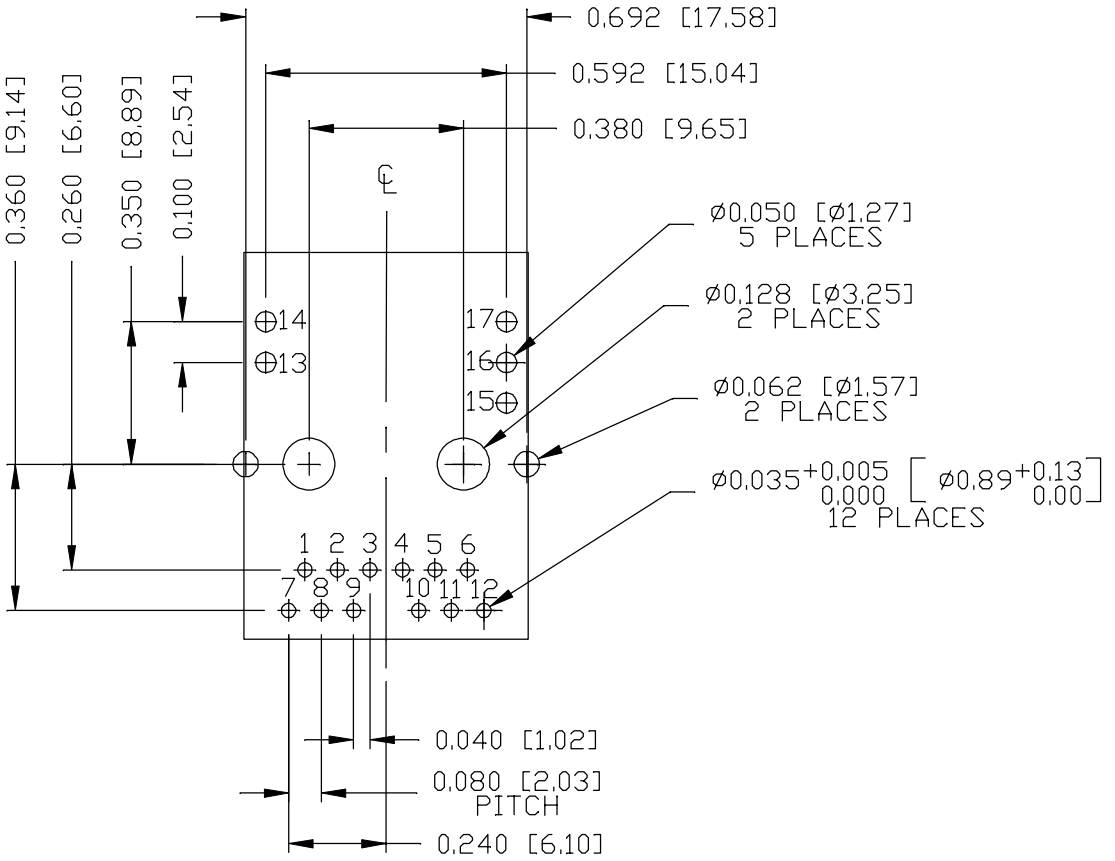

NOTES:

THE SHADED AREA ON THE CUSTOMER BOARD ARE RECOMMENDED TO BE CLEAR OFF ANY VIA HOLE OR COMPONENT PAD.

ORIGINATED BY ANTON LIAO DATE 2016-09-02	TITLE 2.5 gigabit MagJack® (Ultra Low Profile) PATENTED	PART NO. / DRAWING NO. L829-1J1T-JM	STANDARD DIM. TOL. IN INCH	[ ] METRIC DIM. AS REF.	REV. : A / PAGE : 4
DRAWN BY LIU DONGJUN DATE 2016-09-02		FILE NAME L829-1J1T-JM_A.DWG	.X / .XX / .XXX ±0.004	UNIT : INCH [mm] SCALE : N/A SIZE : A4	bel MAGNETIC SOLUTIONS a bel group

This document is electronically generated. This is a controlled copy if used internally

THE INFORMATION CONTAINED HEREIN IS CONSIDERED "PROPRIETARY" TO BEL FUSE INC. AND SHALL NOT BE COPIED, REPRODUCED OR DISCLOSED WITHOUT THE WRITTEN APPROVAL OF BEL FUSE INC.

RoHS

SUGGESTED PANEL OPENING

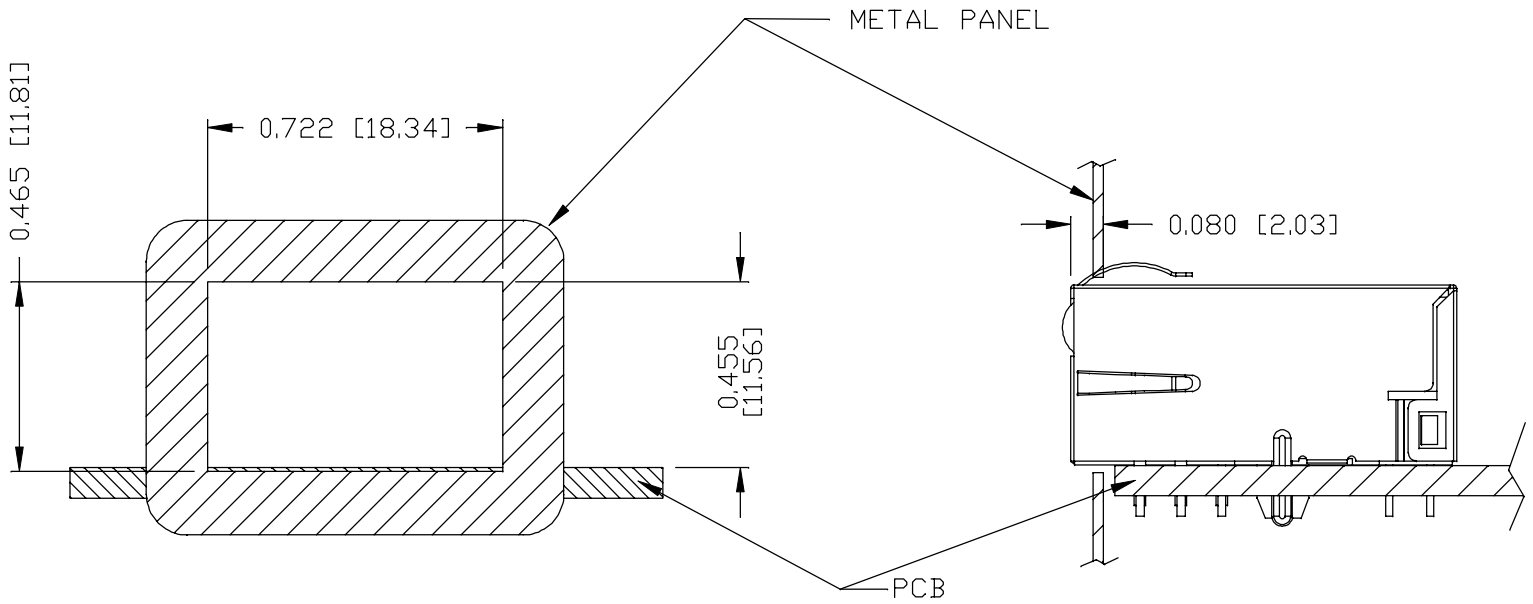

NOTE:

THE DISTANCE OF PANEL INSIDE SURFACE RELATIVE TO FRONT SURFACE OF PART IS ONLY A SUGGESTION. IN CASE THIS DISTANCE IS DIFFERENT, THE REQUIRED PANEL OPENING DIMENSIONS CHANGE ACCORDINGLY.

TRAY PACKING INFORMATION

PACKING TRAY : 0200-9999-E4 (TOP)
0200-9999-E5 (BOTTOM)

PACKING QUANTITY : 60 PCS FINISHED GOODS PER TRAY
11 TRAYS (660 PCS FINISHED GOODS) PER CARTON BOX

NOTE : CARDBOARDS ARE PLACED BETWEEN LAYERS OF PACKING TRAY INSIDE CARTON BOX
(INCLUDE THE UPPERMOST AND LOWERMOST TRAY)

REV. : A | PAGE : 5

ORIGINATED BY ANTON LIAO DATE 2016-09-02	TITLE 2.5 gigabit MagJack® (Ultra Low Profile) PATENTED	PART NO. / DRAWING NO. L829-1J1T-JM	STANDARD DIM. TOL. IN INCH	[ ] METRIC DIM. AS REF.	bel MAGNETIC SOLUTIONS a bel group
DRAWN BY LIU DONGJUN DATE 2016-09-02		FILE NAME L829-1J1T-JM_A.DWG	.X .XX .XXX ±0.004	UNIT : INCH [mm] SCALE : N/A SIZE : A4	

This document is electronically generated. This is a controlled copy if used internally