THE INFORMATION CONTAINED HEREIN IS CONSIDERED "PROPRIETARY" TO BEL FUSE INC. AND SHALL NOT BE COPIED, REPRODUCED OR DISCLOSED WITHOUT THE WRITTEN APPROVAL OF BEL FUSE INC.

PRELIMINARY

RoHS 2002/95/EC

LED 2 & 4 POLARITY			LED 1 & 3 POLARITY		
PIN 11	PIN 12	COLOR	PIN 13	PIN 14	COLOR
+	-	GREEN	+	-	GREEN

ELECTRICAL CHARACTERISTICS @ 25°C

TURNS RATIO

TP1	1CT : 1CT ±2%
TP2	1CT : 1CT ±2%

OCL @ 100kHz/100mVRMS

8mA DC BIAS (0°C - 70°C)	350µH MIN.

INS. LOSS

0.1MHz TO 1MHz	-1.1 dB MAX
1MHz TO 65MHz	-0.5 dB MAX
65MHz TO 100MHz	-1.0 dB MAX

RET. LOSS (MIN) @ 100OHMS ±15%

0.5MHz-40MHz	-18 dB
40MHz-80MHz	-12+20LOG(f/80MHz) dB

CM TO CM REJ

100kHz - 100MHz	-30 dB MIN

CM TO DM REJ

100kHz - 100MHz	-35 dB MIN

HIPOT (Isolation Voltage): 1500 Vrms

100% OF PRODUCTION TESTED TO COMPLY WITH IEEE 802.3 ISOLATION REQUIREMENTS.

LEDS 1, 2, 3 AND 4

VF (FORWARD VOLTAGE)	IF=20mA	GREEN	2.2V TYP.
λD (DOMINANT WAVELENGTH)	IF=20mA	GREEN	565nm TYP.

SCHEMATIC

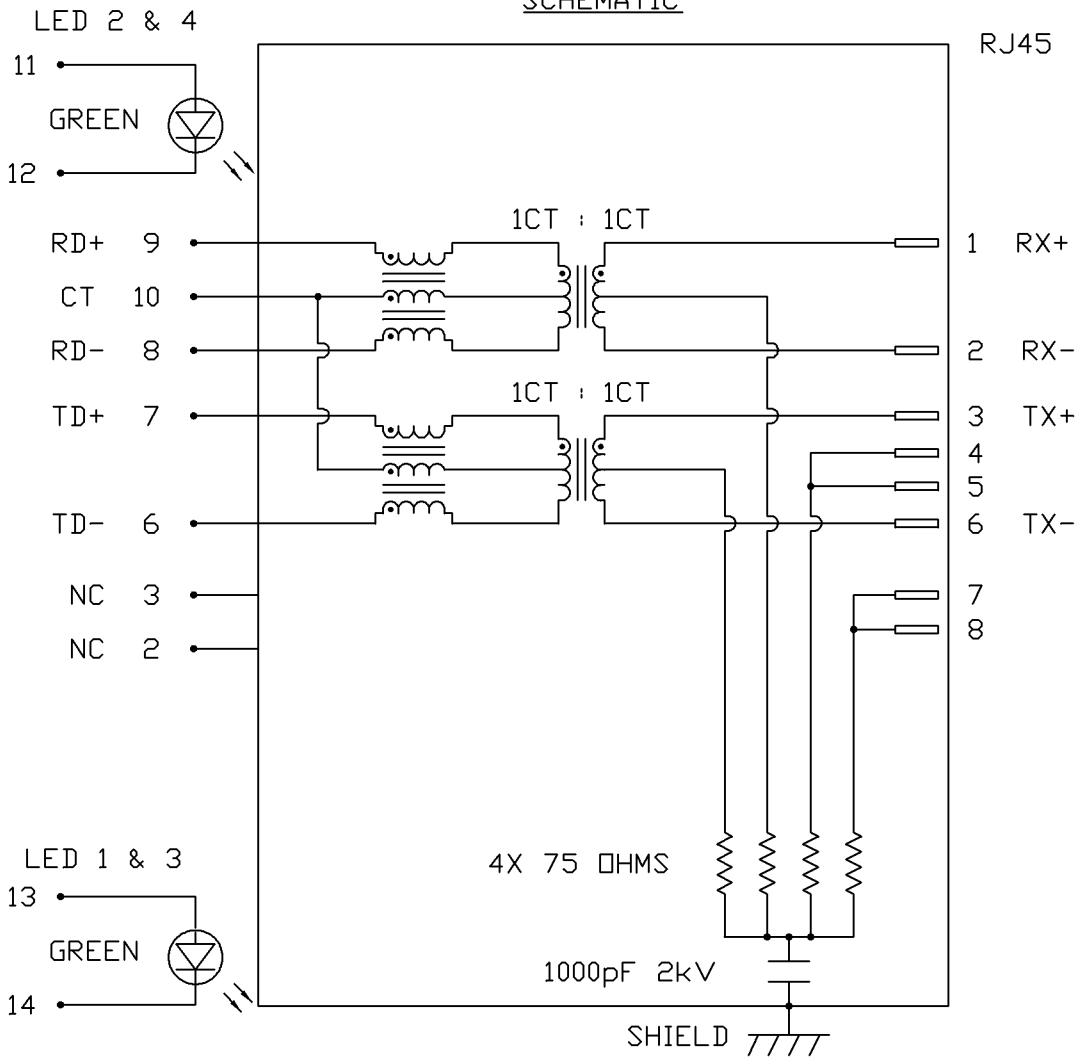

ORIGINATED BY: WANCHUNG CHOW	DATE: 01-12-09	TITLE: 2X8 MagJack® (COMPRESSOR SERIES)	PART NO. / DRAWING NO.: C850-2G8R-M9	STANDARD DIM. TOL. IN INCH: .X, .XX, .XXX	[ ] METRIC DIM. AS REFERENCE	bel COMPONENTS FOR A CONNECTED PLANET
DRAWN BY: WEIDE LEE	DATE: 01-12-09		FILE NAME: C850-2G8R-M9_PD.DWG		UNIT : INCH [mm] / REV. : PD	
					SCALE : N/A / SIZE : A4	
					PAGE : 2	

This document is electronically generated. This is a controlled copy if used internally

Please read our datasheet & drawing disclaimer here.

THE INFORMATION CONTAINED HEREIN IS CONSIDERED "PROPRIETARY" TO BEL FUSE INC. AND SHALL NOT BE COPIED, REPRODUCED OR DISCLOSED WITHOUT THE WRITTEN APPROVAL OF BEL FUSE INC.

PRELIMINARY

RoHS 2002/95/EC

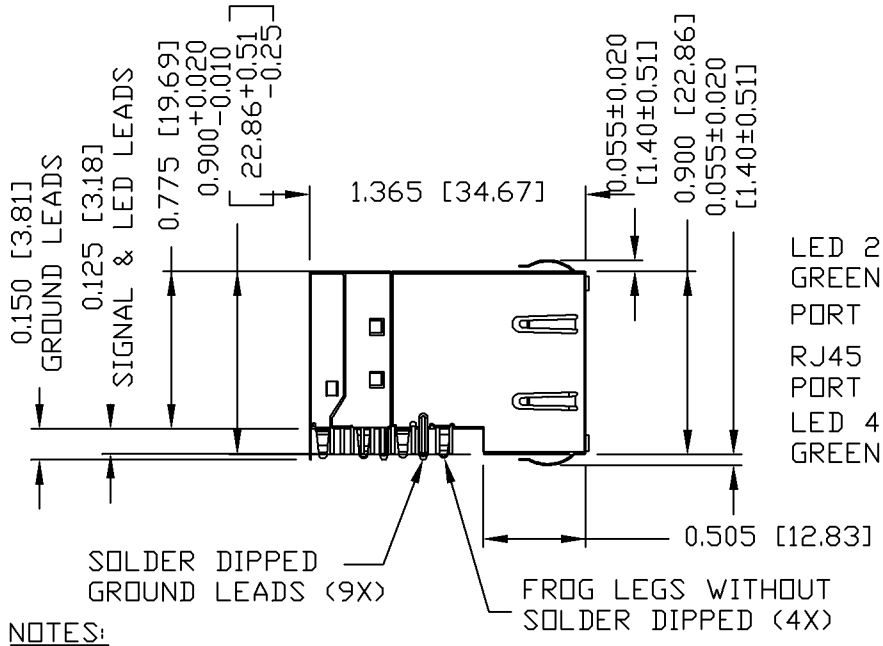

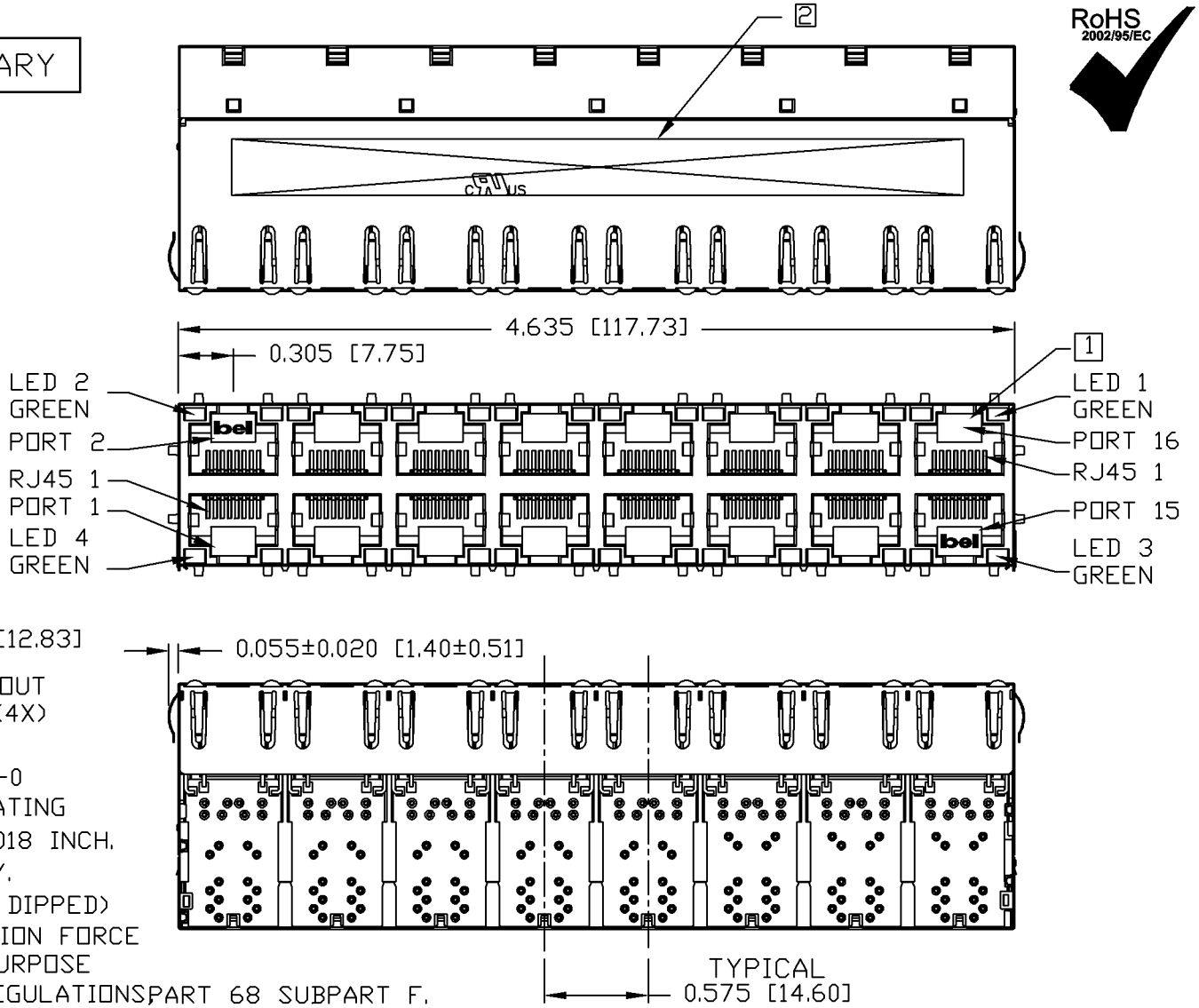

NOTES:

PLASTIC HOUSING: THERMOPLASTIC PBT
FLAMMABILITY RATING UL 94V-0

CONTACT PLATING: 30 MICRO-INCH HARD GOLD PLATING

OUTPUT PINS: TIN-COATED COPPER WIRE, DIA 0.018 INCH.

METAL SHIELD: NICKEL PLATED ON COPPER ALLOY.
(ALL GROUND LEADS ARE SOLDER DIPPED)
FROG LEGS ARE FOR PCB RETENTION FORCE ONLY AND NOT FOR GROUNDING PURPOSE

1. JACK CAVITY CONFORMS TO FCC RULES AND REGULATIONS, PART 68 SUBPART F.
2. MARK PART WITH MFG LOGO, MFG NAME, PART NUMBER, AND DATE CODE.

c UL us UL RECOGNIZED - FILE #E196366 AND E169987.
RoHS COMPLIANCE, PER EU DIRECTIVE 2002/95/EC.

ORIGINATED BY	DATE	TITLE	PART NO. / DRAWING NO.	STANDARD DIM. TOL. IN INCH		[ ] METRIC DIM. AS REFERENCE	
HOWFAR WEI	01-12-09	2X8 MagJack® (COMPRESSOR SERIES)	C850-2G8R-M9	.X		UNIT : INCH [mm]	REV. : PD
DRAWN BY	DATE		FILE NAME	.XX		SCALE : N/A	SIZE : A4
JOLLY LUO	01-12-09		C850-2G8R-M9_PD.DWG	.XXX	±0.010		PAGE : 3

bel COMPONENTS FOR A CONNECTED PLANET

This document is electronically generated. This is a controlled copy if used internally

THE INFORMATION CONTAINED HEREIN IS CONSIDERED "PROPRIETARY" TO BEL FUSE INC. AND SHALL NOT BE COPIED, REPRODUCED OR DISCLOSED WITHOUT THE WRITTEN APPROVAL OF BEL FUSE INC.

PRELIMINARY

RoHS 2002/95/EC

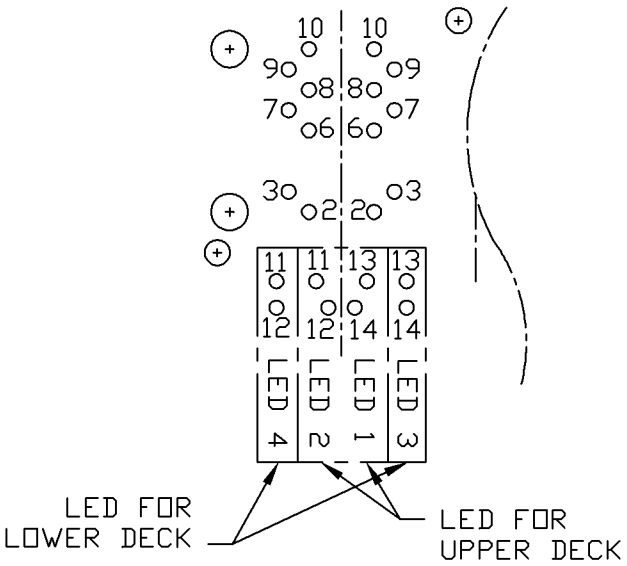

PIN-OUT INFORMATION
(COMPONENT SIDE VIEW)

14	GREEN (-)
13	GREEN (+)
12	GREEN (-)
11	GREEN (+)
10	CT
9	RD+
8	RD-
7	TD+
6	TD-
5	NO PIN
4	NO PIN
3	NC
2	NC
1	NO PIN

PORT ASSIGNMENT
(COMPONENT SIDE VIEW)

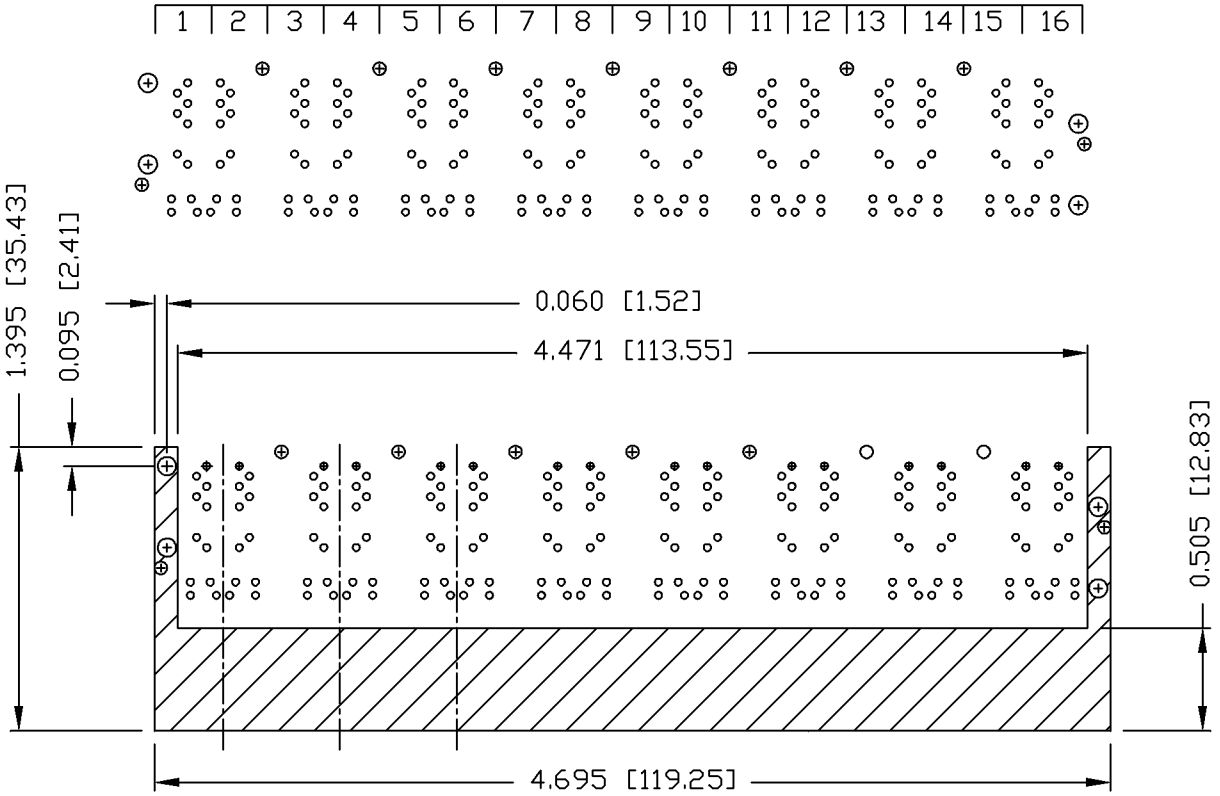

THE SHADED AREA ON THE CUSTOMER BOARD ARE RECOMMENDED TO BE CLEAR OFF ANY VIA HOLE OR COMPONENT PAD.

ORIGINATED BY: HOWFAR WEI	DATE: 01-12-09	TITLE: 2X8 MagJack® (COMPRESSOR SERIES)	PART NO. / DRAWING NO.: C850-2G8R-M9	STANDARD DIM. TOL. IN INCH: .X, .XX, .XXX ±0.004	[ ] METRIC DIM. AS REFERENCE
DRAWN BY: JOLLY LUO	DATE: 01-12-09		FILE NAME: C850-2G8R-M9_PD.DWG		UNIT : INCH [mm] / REV. : PD
					SCALE : N/A / SIZE : A4
					PAGE : 4

bel COMPONENTS FOR A CONNECTED PLANET

This document is electronically generated. This is a controlled copy if used internally

THE INFORMATION CONTAINED HEREIN IS CONSIDERED "PROPRIETARY" TO BEL FUSE INC. AND SHALL NOT BE COPIED, REPRODUCED OR DISCLOSED WITHOUT THE WRITTEN APPROVAL OF BEL FUSE INC.

PRELIMINARY

RoHS 2002/95/EC

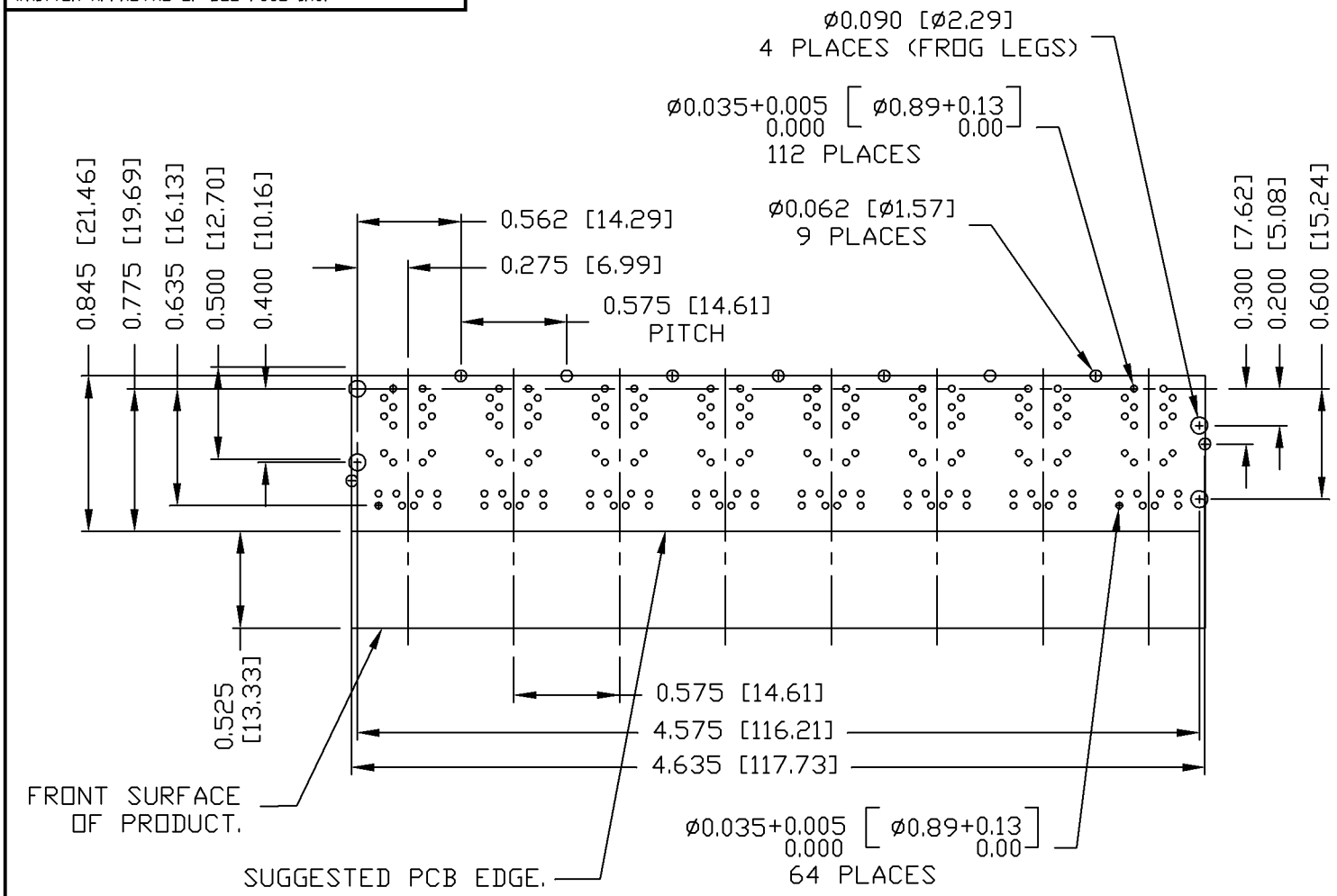

(COMPONENT SIDE VIEW)

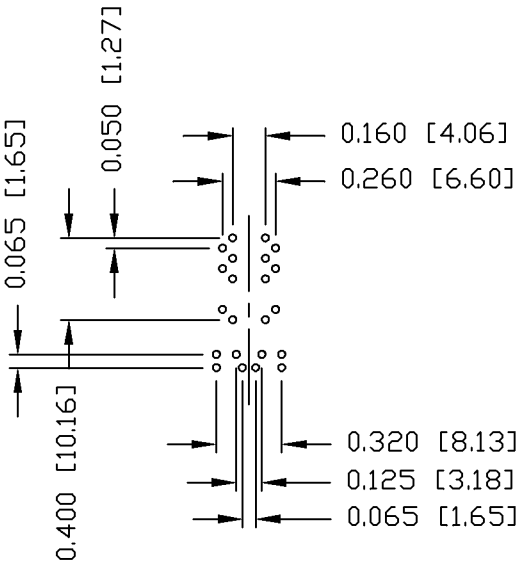

SUGGESTED FOOTPRINT

ORIGINATED BY: HOWFAR WEI	DATE: 01-12-09	TITLE: 2X8 MagJack® (COMPRESSOR SERIES)	PART NO. / DRAWING NO.: C850-2G8R-M9	STANDARD DIM. TOL. IN INCH: .X, .XX, .XXX ±0.004	[ ] METRIC DIM. AS REFERENCE	bel COMPONENTS FOR A CONNECTED PLANET
DRAWN BY: JOLLY LUO	DATE: 01-12-09		FILE NAME: C850-2G8R-M9_PD.DWG		UNIT : INCH [mm] / REV. : PD	
					SCALE : N/A / SIZE : A4	
					PAGE : 5	

This document is electronically generated. This is a controlled copy if used internally

THE INFORMATION CONTAINED HEREIN IS CONSIDERED "PROPRIETARY" TO BEL FUSE INC. AND SHALL NOT BE COPIED, REPRODUCED OR DISCLOSED WITHOUT THE WRITTEN APPROVAL OF BEL FUSE INC.

PRELIMINARY

RoHS 2002/95/EC

SUGGESTED PANEL OPENING

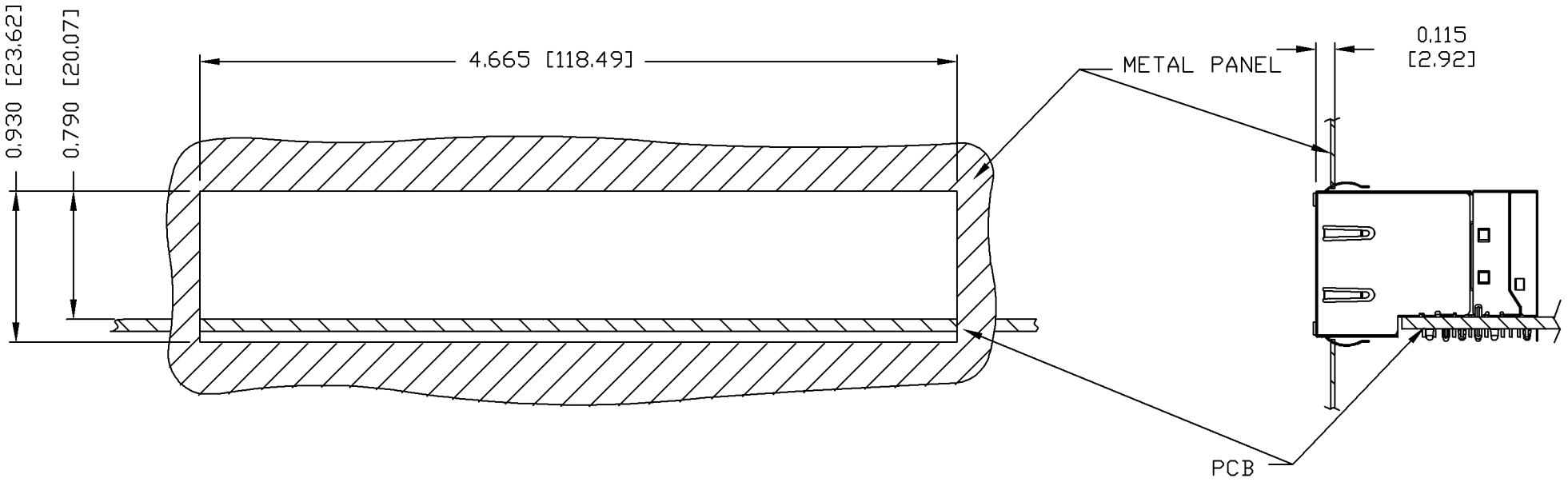

NOTE:

THE DISTANCE OF PANEL INSIDE SURFACE RELATIVE TO FRONT SURFACE OF PART IS ONLY A SUGGESTION. IN CASE THIS DISTANCE IS DIFFERENT, THE REQUIRED PANEL OPENING DIMENSIONS CHANGE ACCORDINGLY.

PACKING INFORMATION

PACKING TRAY : 0200-9999-K7 (TOP)
0200-9999-K8 (BOTTOM)

PACKING QUANTITY : 12 PCS FINISHED GOODS PER TRAY.
6 TRAYS (72 PCS FINISHED GOODS) PER CARTON BOX.

NOTE : CARDBOARDS ARE PLACED BETWEEN LAYERS OF PACKING TRAY INSIDE CARTON BOX.
(INCLUDE THE UPPERMOST AND LOWERMOST TRAY)

ORIGINATED BY	DATE	TITLE	PART NO. / DRAWING NO.	STANDARD DIM. TOL. IN INCH		[ ] METRIC DIM. AS REFERENCE	
HOWFAR WEI	01-12-09	2X8 MagJack® (COMPRESSOR SERIES)	C850-2G8R-M9	.X		UNIT : INCH [mm]	REV. : PD
DRAWN BY	DATE		FILE NAME	.XX		SCALE : N/A	SIZE : A4
JOLLY LUO	01-12-09		C850-2G8R-M9_PD.DWG	.XXX	±0.004		PAGE : 6

bel COMPONENTS FOR A CONNECTED PLANET

This document is electronically generated. This is a controlled copy if used internally