THIS DRAWING AND THE SUBJECT MATTER SHOWN THEREON ARE CONFIDENTIAL AND THE PROPERTY OF BEL/STEWART/TRP CONNECTOR AND SHALL NOT BE REPRODUCED, COPIED, OR USED IN ANY MANNER WITHOUT THE WRITTEN CONSENT OF TRP CONNECTOR.

PRODUCT MAY BE PROTECTED BY ONE OR MORE OF THE FOLLOWING US PATENTS:
5736910 5939955 6425781 6428361 6554638 6840817 7123117
7429195 7717749 7808751 6217391 6149050 7924130

REVISIONS

P	LTR	DESCRIPTION	DATE	DWN	APVD
	C	EC-1411035 COMPANY LOGO CHANGE	19JAN2015	CZ	TY

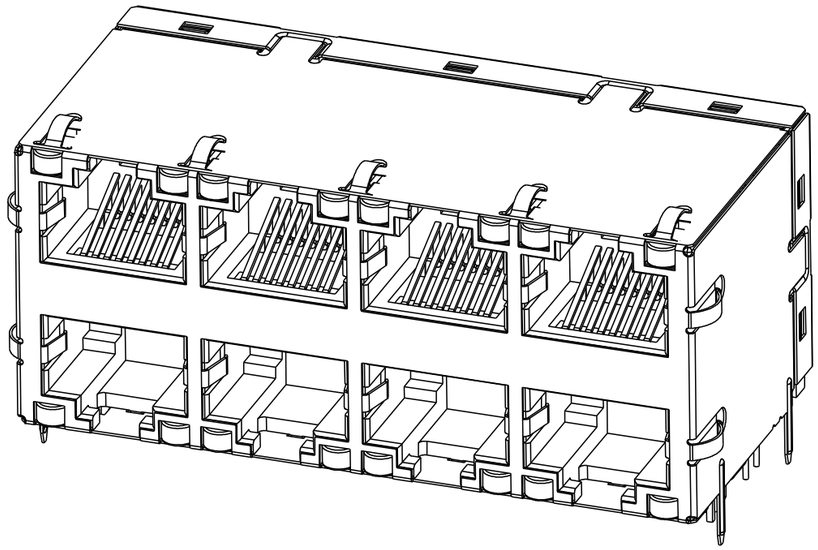

S896ET 10/100 CIRCUIT 2 7

TOP AND BOTTOM PORTS

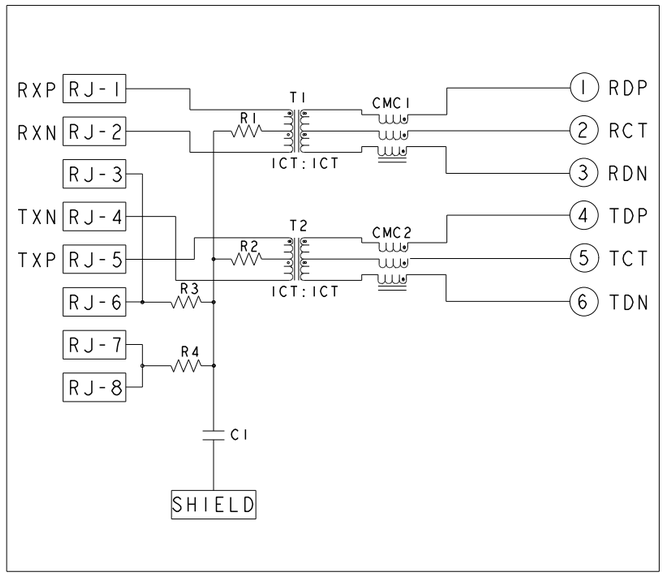

C1 = 1000pF, 2kV, X7R DECOUPLING CAPACITOR
R1-R4 = 75 Ohms, 1/16 W, RESISTORS

1. MATERIALS:
   PLASTIC HOUSING: BLACK, THERMOPLASTIC FLAMMABILITY RATING UL 94V-0
   SHIELD: BRASS, PREPLATED WITH 0.76um MIN SEMI-BRIGHT NICKEL,
   POST DIPPED WITH 2.54um MIN SAC SOLDER ON SOLDER TAILS,
   CONTACTS: PHOSPHOR BRONZE, 1.27um MIN OVERALL NICKEL UNDERPLATE,
   WITH SELECT 0.05um MIN GOLD OVER 0.76um MIN PALLADIUM-NICKEL AT
   MATING INTERFACE AND 2.54um MIN MATTE TIN ON SOLDER TAILS.
   LED: DIFFUSED EPOXY LENS, CARBON STEEL LEAD FRAME TAILS OF LED
   ARE PREPLATED WITH 2.03um MIN SILVER OVER 1.02um MIN NICKEL
   UNDERPLATE OVER 1.02um MIN COPPER UNDERPLATE. POST-PLATED WITH
   2.54um MIN MATTE TIN AND/OR SAC SOLDER DIP OR PURE TIN SOLDER DIP
   ALL PC BOARDS: HIGH TEMPERATURE PCB,TG>170°C

2. MAGNETICS
   APPLICATION: 10/100 EI/TI
   IMPEDANCE: 100 OHMS
   TURNS RATIO (CHIP:CABLE): TX = 1:1, RX = 1:1
   OPEN CIRCUIT INDUCTANCE (OCL): 350uH MIN @100kHz, 0.1VRMS,
   8mADC BIAS FROM -40°C TO +85°C, TX AND RX
   PERFORMANCE @ 25°C:
   INSERTION LOSS (IL): 1.1dB MAX FROM 0.5MHz TO 100MHz
   RETURN LOSS (RL): 18dB MIN FROM 0.5MHz TO 30MHz
   18-20LOG(f/30)dB MIN FROM 30.1MHz TO 60MHz
   12dB MIN FROM 60.1MHz TO 80MHz
   CROSSTALK ATTENUATION: 35dB MIN FROM 0.5MHz TO 40MHz
   33-20LOG(f/50)dB MIN FROM 40.1MHz TO 100MHz
   COMMON MODE REJECTION RATIO (CMRR): 30dB MIN FROM 0.5MHz TO 100MHz
   ISOLATION VOLTAGE: 2250VDC(MAX) FOR 60 SECONDS WITH A RISE TIME OF
   500V/SEC AND WITH ALL PORTS CONNECTED.

3. PART NUMBER, DATE CODE AND COUNTRY OF ORIGIN ARE
   LOCATED IN APPROXIMATE AREA SHOWN. DATE CODE: YYWWD WHERE "YY" IS
   YEAR, "WW" IS WEEK, "D" IS DAY OF WEEK, WITH SUNDAY=1.

4. TRP CONNECTOR LOGO AND AGENCY APPROVAL LOGO ARE
   LOCATED IN APPROXIMATE AREA SHOWN.

5. OPERATING TEMP: FROM -40°C TO +85°C.

6. RJ45 CAVITY CONFORMS TO FCC RULES AND REGULATION PART 68 SUBPART F.

7. INDICATED MAGNETIC CONNECTIONS ARE SYMMETRICAL AND
   SUPPORT AUTO-MDI/MDIX.

8. DATUM AND BASIC DIMENSION ESTABLISHED BY CUSTOMER.

9. BASIC DIMENSION ESTABLISHED BY CUSTOMER, BUT MAY NOT BE
   GREATER THAN 5.08mm.

10. LEDS ARE DRIVEN WITH CONSTANT CURRENT AT APPROX 20mA
    LED COLOR: DOMINANT WAVELENGTH (λD): GREEN 568 nm TYP. @ IF=20mA
    FORWARD VOLTAGE (VF): GREEN 2.2V TYP. @ IF=20mA

11. THE PARTS ARE RECOMMENDED FOR WAVE SOLDERING PROCESS,
    PEAK TEMPERATURE 260°C MAX, 10 SECONDS MAX.

GREEN	GREEN	GREEN	GREEN	1840891-1
BOTTOM LED 2	BOTTOM LED 1	TOP LED 2	TOP LED 1	PART NUMBER

THIS DRAWING IS A CONTROLLED DOCUMENT.

DIMENSIONS: mm

TOLERANCES UNLESS OTHERWISE SPECIFIED:
0 PLC ±
1 PLC ±
2 PLC ±0.25
3 PLC ±
4 PLC ±
ANGLES ±

PRODUCT SPEC: 108-104004
APPLICATION SPEC: -

DWN TOM HSU/KQ LI 06JAN2011
CHK TONY YUAN 06JAN2011
APVD KEITH ZHU 06JAN2011

trp CONNECTOR a bel group — DONGGUAN CHINA

MODEL NAME: MAGJACK STACK NON-POE

DESC: 2X4 S896ET 10/100 W/ LED

SIZE	CAGE CODE	DRAWING NO	RESTRICTED TO
A1		C-1840891	-

CUSTOMER DRAWING | SCALE 4:1 | SHEET 1 OF 4 | REV C

© COPYRIGHT TRP connector ALL RIGHTS RESERVED

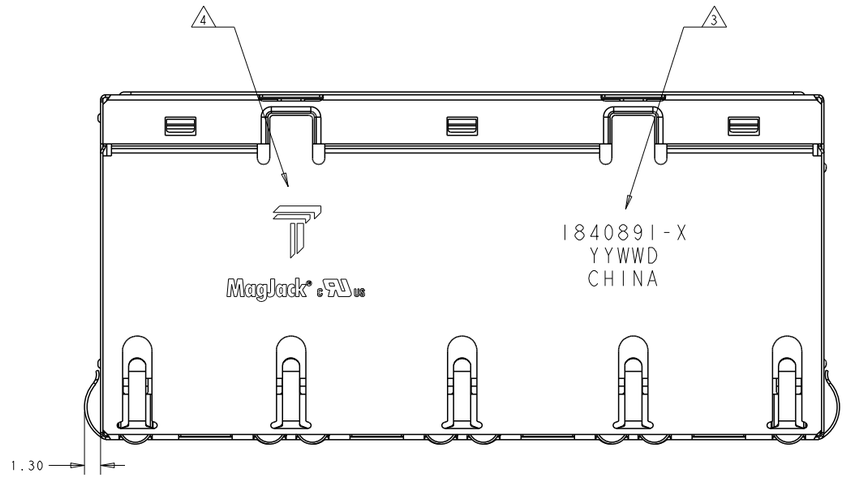

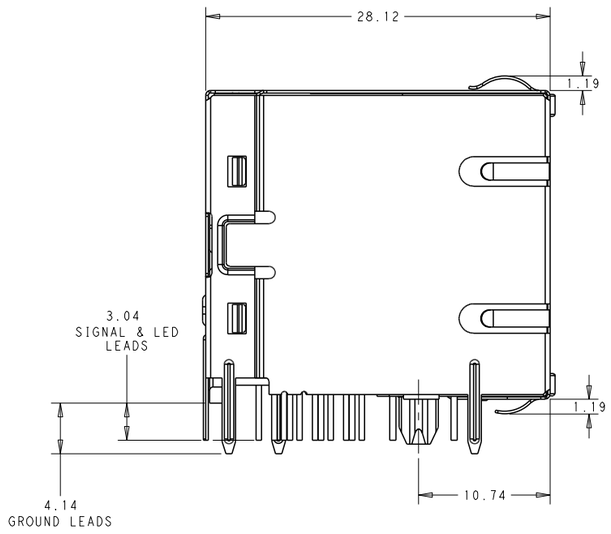

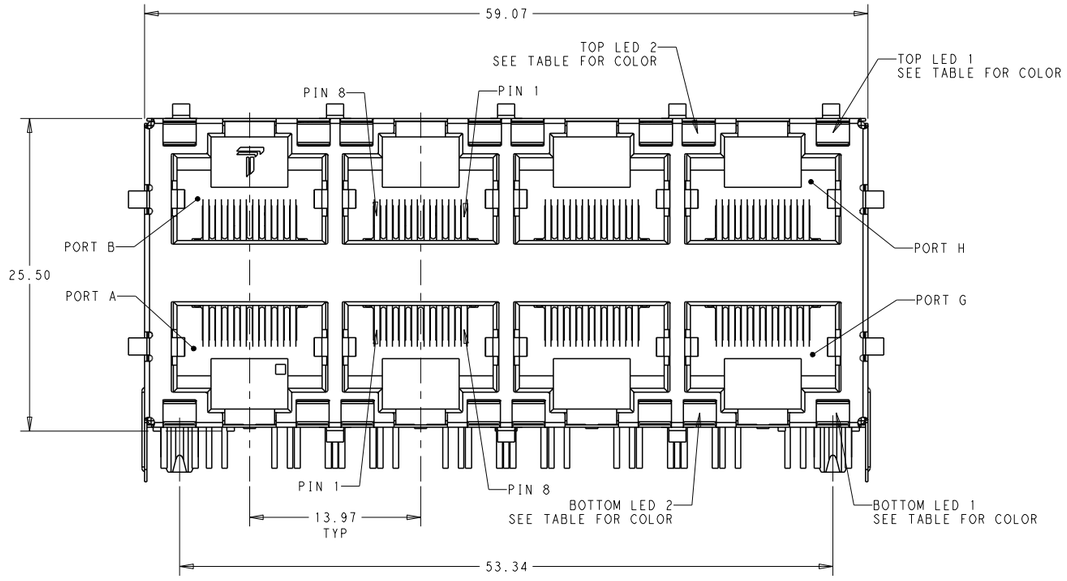

THIS DRAWING IS A CONTROLLED DOCUMENT.

DIMENSIONS: mm

TOLERANCES UNLESS OTHERWISE SPECIFIED:
0 PLC ±-
1 PLC ±-
2 PLC ±0.25
3 PLC ±-
4 PLC ±-
ANGLES ±-

PRODUCT SPEC: 108-104004
APPLICATION SPEC: -

DWN: TOM HSU/KQ LI 06JAN2011
CHK: TONY YUAN 06JAN2011
APVD: KEITH ZHU 06JAN2011

trp CONNECTOR a bel group — DONGGUAN CHINA

MODEL NAME: MAGJACK STACK NON-POE

DESC: 2X4 S896ET 10/100 W/ LED

SIZE: A1 | CAGE CODE | DRAWING NO: C-1840891 | RESTRICTED TO: -

CUSTOMER DRAWING | SCALE 4:1 | SHEET 2 OF 4 | REV C

© COPYRIGHT TRP connector ALL RIGHTS RESERVED

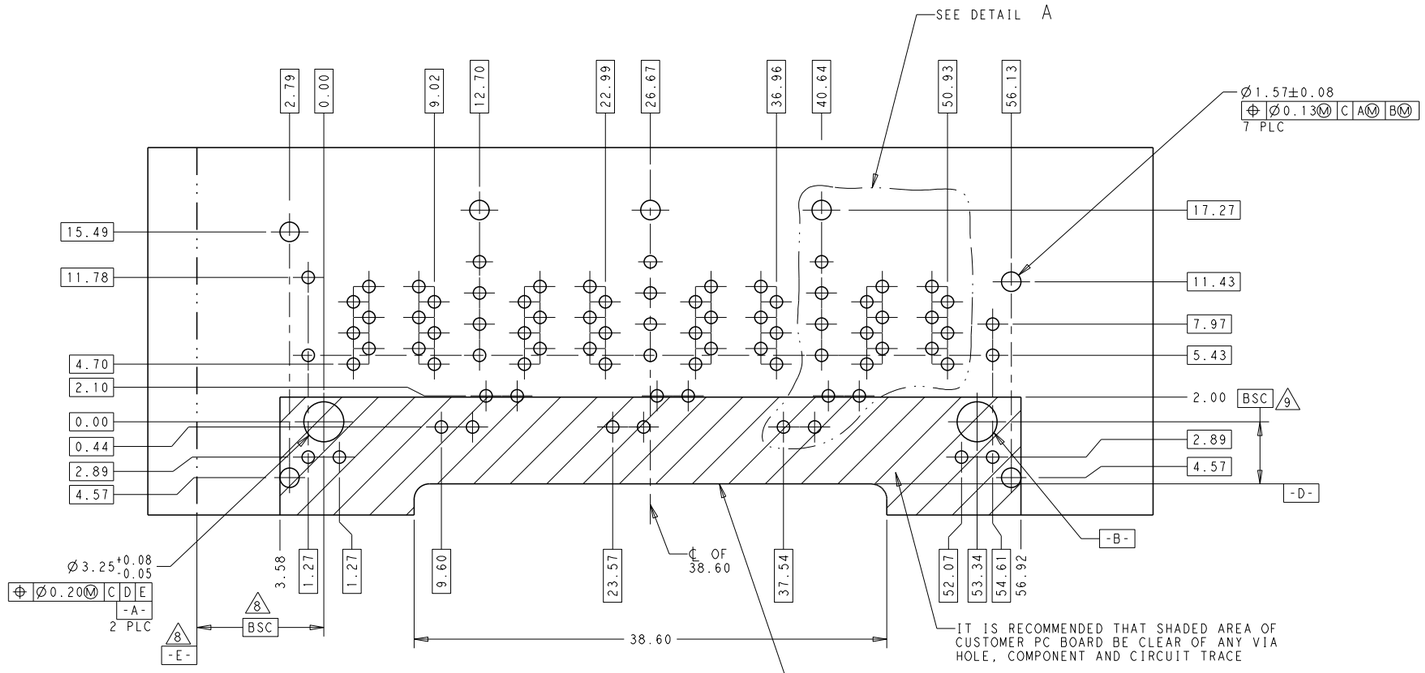

RECOMMENDED PCB LAYOUT
COMPONENT SIDE VIEW



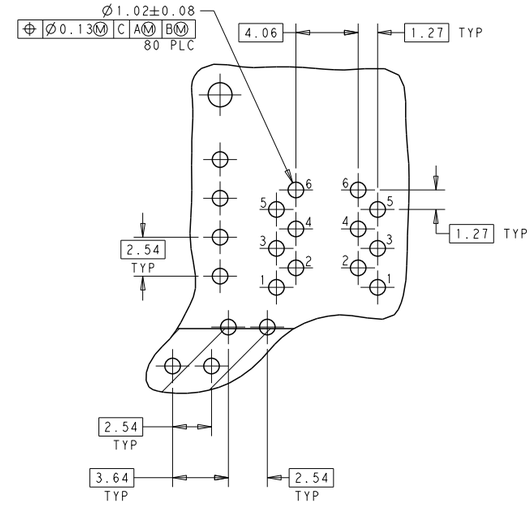

DETAIL A
SCALE 5:1

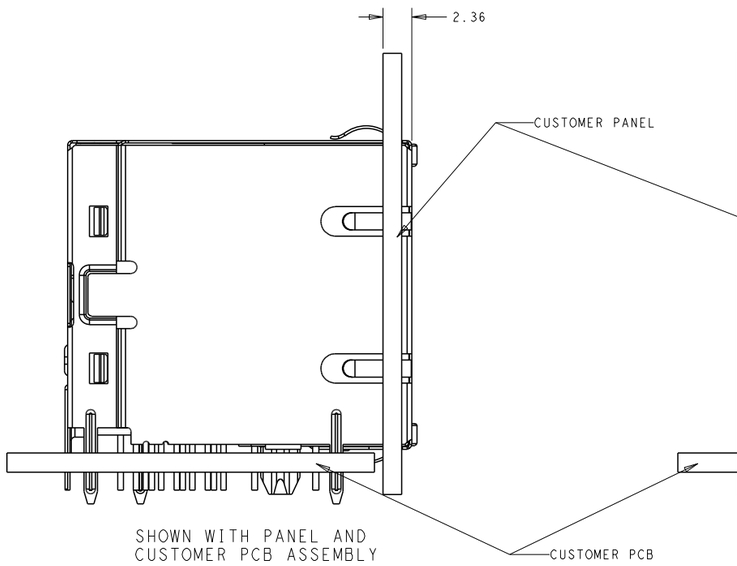

SHOWN WITH PANEL AND
CUSTOMER PCB ASSEMBLY

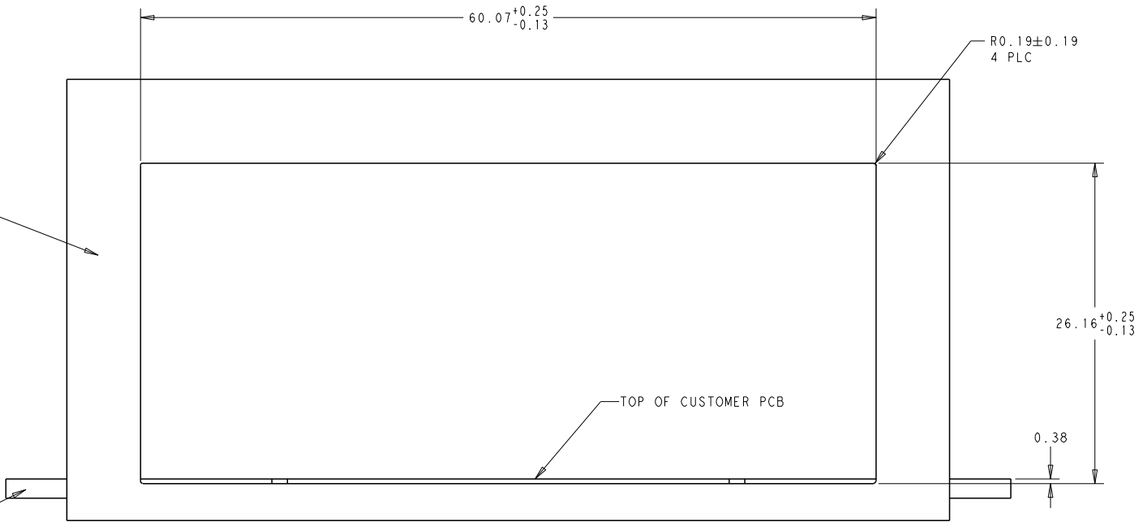

SUGGESTED PANEL CUTOUT DIMENSIONS

THIS DRAWING IS A CONTROLLED DOCUMENT.	DWN TOM HSU/KQ LI 06JAN2011	trp CONNECTOR a bel group	DONGGUAN CHINA
DIMENSIONS: mm	CHK TONY YUAN 06JAN2011		
TOLERANCES UNLESS OTHERWISE SPECIFIED: 0 PLC ±: 1 PLC ±: 2 PLC ±0.25 3 PLC ±: 4 PLC ±: ANGLES ±:	APVD KEITH ZHU 06JAN2011	DESC 2X4 S896ET 10/100 W/ LED	
PRODUCT SPEC 108-104004	APPLICATION SPEC -	MODEL NAME MAGJACK STACK NON-POE	SIZE A1 / CAGE CODE / DRAWING NO C-1840891 / RESTRICTED TO -
CUSTOMER DRAWING	SCALE 4:1	SHEET 3 OF 4	REV C

© COPYRIGHT TRP connector ALL RIGHTS RESERVED

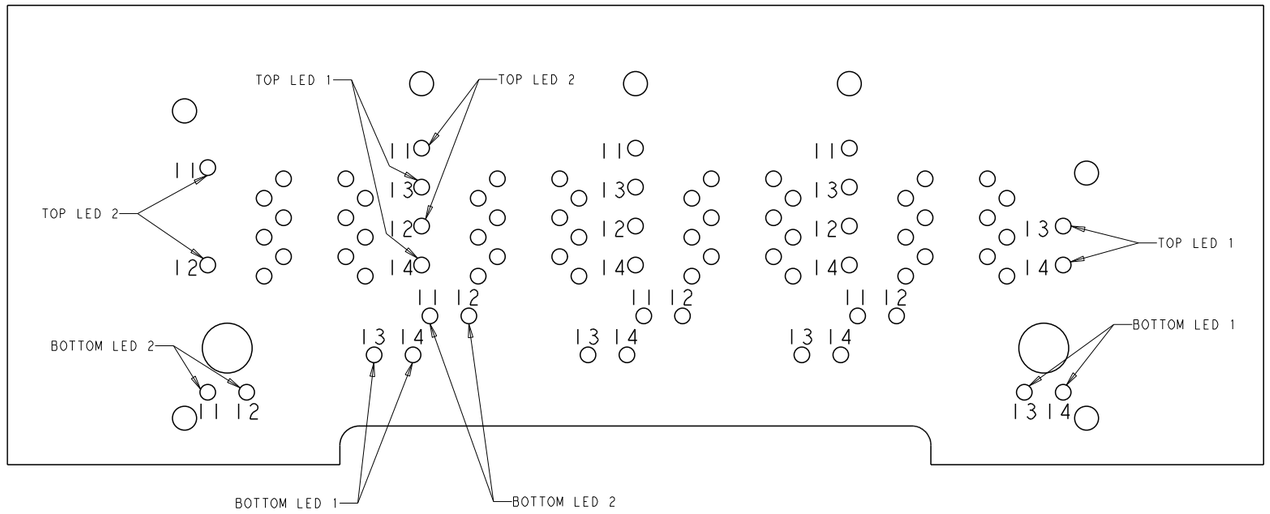

LED HOLE DESIGNATIONS
COMPONENT SIDE VIEW

SINGLE COLOR LED

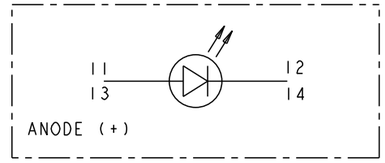

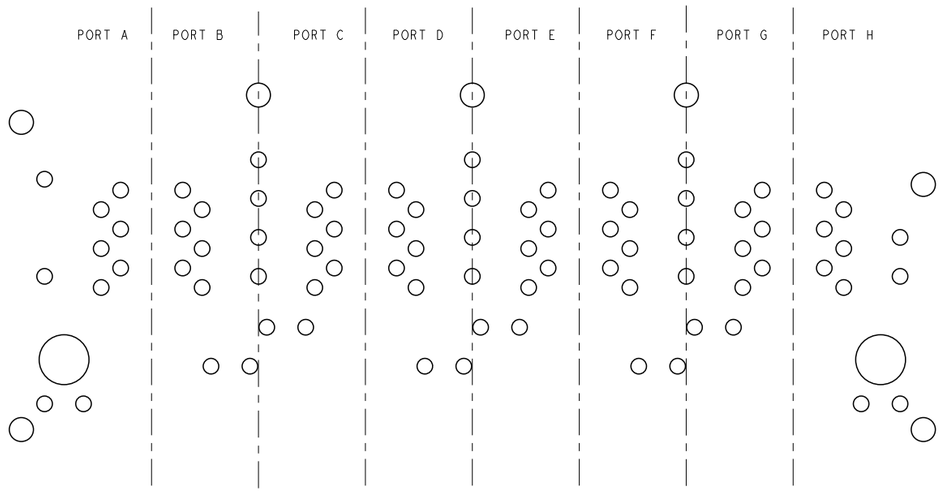

PORT ASSIGNMENT
COMPONENT SIDE VIEW

THIS DRAWING IS A CONTROLLED DOCUMENT.		DWN TOM HSU/KQ LI 06JAN2011	trp CONNECTOR a bel group — DONGGUAN CHINA
DIMENSIONS: mm	TOLERANCES UNLESS OTHERWISE SPECIFIED: 0 PLC ±. 1 PLC ±. 2 PLC ±0.25 3 PLC ±. 4 PLC ±. ANGLES ±.	CHK TONY YUAN 06JAN2011	
		APVD KEITH ZHU 06JAN2011	
PRODUCT SPEC 108-104004	APPLICATION SPEC -	MODEL NAME MAGJACK STACK NON-POE	DESC 2X4 S896ET 10/100 W/ LED
		SIZE A1	CAGE CODE — DRAWING NO C-1840891 — RESTRICTED TO -
		CUSTOMER DRAWING	SCALE 4:1 — SHEET 4 OF 4 — REV C