THIS DRAWING AND THE SUBJECT MATTER SHOWN THEREON ARE CONFIDENTIAL AND THE PROPERTY OF BEL/STEWART/TRP CONNECTOR AND SHALL NOT BE REPRODUCED, COPIED, OR USED IN ANY MANNER WITHOUT THE WRITTEN CONSENT OF TRP CONNECTOR.

PRODUCT MAY BE PROTECTED BY ONE OR MORE OF THE FOLLOWING US PATENTS:
5736910 5939955 6425781 6428361 6554638 6840817 7123117
7429195 7717749 7808751 6217391 6149050 7924130

REVISIONS

P	LTR	DESCRIPTION	DATE	DWN	APVD
	E	LOGO CHANGE	03MAR2013	TY	KZ
	F	EC-1411035 COMPANY LOGO CHANGE	15JAN2015	TYR	TYN

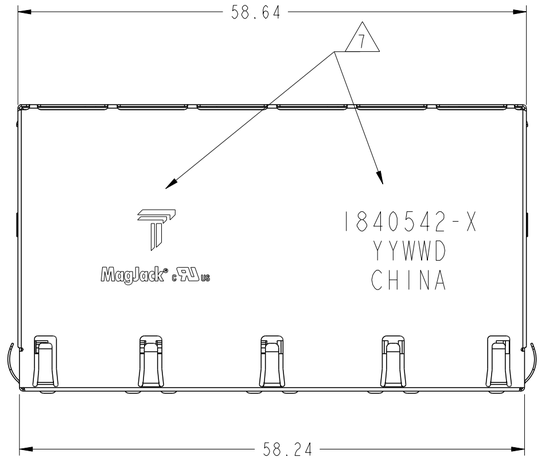

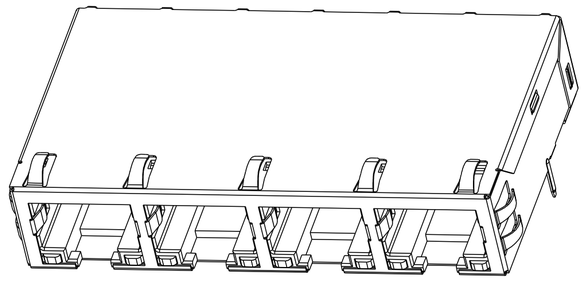

SCALE 2:1

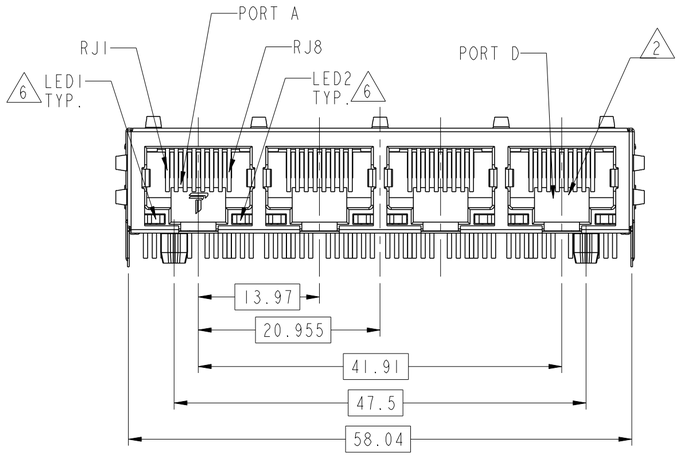

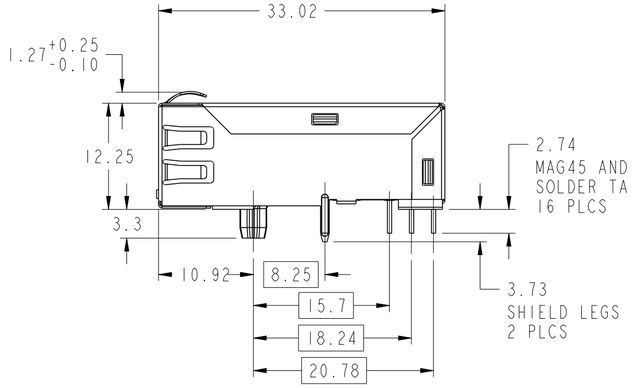

1. MATERIALS
   HOUSING: THERMOPLASTIC, BLACK, FLAMMABILITY RATING UL 94V-0
   SHIELD: BRASS, 0.20mm THICK
   PREPLATED WITH MIN 0.76um SEMI-BRIGHT NICKEL
   POST DIPPED WITH 2.54um MIN SAC SOLDER AT GROUND PINS.
   CONTACT: PHOSPHOR BRONZE, 0.46mm X0.3mm
   WITH 1.27um MIN OVERALL NICKEL UNDERPLATE AND
   SELECTIVE 1.27um MIN GOLD PLATING AT MATING INTERFACE
   SOLDER TAIL: COPPER CLADDED STEEL, 0.50mm SQUARE
   PLATED WITH 2.54um MIN MATTE TIN
   LIGHT PIPE: POLYCARBON, TRANSPARENT, RATING UL 94V-0

2. RJ45 CAVITY CONFORMS TO FCC RULES AND REGULATION PART 68 SUBPART F.

3. MAGNETICS
   -APPLICATION: 10/100/1000 BASE-T
   -IMPEDANCE: 100 OHMS
   -TURNS RATIO (CHIP:CABLE): 1:1 ALL FOUR PAIRS
   -OPEN CIRCUIT INDUCTANCE (OCL): 350uH MIN @100kHz, 0.1VRMS,
   8mA DC BIAS FROM 0°C TO 70°C, ALL FOUR PAIRS
   -ALL FOUR PAIRS BI-DIRECTIONAL
   -PERFORMANCE @ 25°C:
   INSERTION LOSS (IL): 1.1dB MAX FROM 0.5MHz TO 100MHz
   RETURN LOSS (RL): 18dB MIN FROM 0.5MHz TO 40MHz
   12-20LOG(f/80)dB MIN FROM 40.1MHz TO 100MHz
   CROSSTALK ATTENUATION: 35dB MIN FROM 0.5MHz TO 40MHz
   33-20LOG(f/50)dB MIN FROM 40.1MHz TO 100MHz
   COMMON MODE REJECTION RATIO (CMRR): 30dB MIN FROM 0.5MHz TO 100MHz
   -ISOLATION VOLTAGE:COMPLIES WITH IEEE802.3 2002,PARA 40.6.1.1,ITEM a and b.

4. OPERATING TEMPERATURE: 0°C ~ 70°C

5. THE MAGNETIC CIRCUIT ON ALL FOUR CHANNELS ARE SYMMETRICAL AND SUPPORT AUTO-MDIX OPERATION.

6. LED IS DRIVEN WITH CONSTANT CURRENT AT APPROX 20mA.
   LED COLOR: DOMINANT WAVELENGTH (λD): GREEN 568 nm TYP. at IF=20mA
   FORWARD VOLTAGE (VF): GREEN 2.2V TYP. at IF=20mA
   DOMINANT WAVELENGTH (λD): YELLOW 588 nm TYP. at IF=20mA
   FORWARD VOLTAGE (VF): YELLOW 2.2V TYP. at IF=20mA
   DOMINANT WAVELENGTH (λD): ORANGE 608 nm TYP. at IF=20mA
   FORWARD VOLTAGE (VF): ORANGE 2.2V TYP. at IF=20mA

7. TRP CONNECTOR LOGO, PART NUMBER, DATE CODE, COUNTRY OF ORIGIN, AGENCY LOGO TO BE MARKED IN APPROXIMATE LOCATION SHOWN.

8. THESE PARTS ARE RECOMMENDED FOR WAVE SOLDERING PROCESS, PEAK SOLDERING TEMPERATURE IS 260°C MAX, 10 SECONDS MAX.

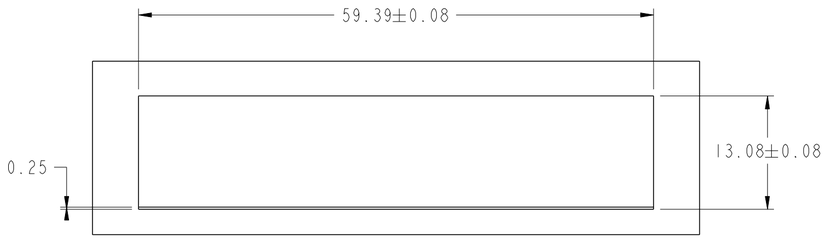

SUGGESTED PANEL CUTOUT
SCALE 2:1

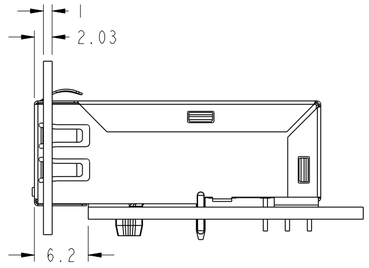

CONNECTOR ASSEMBLED TO PANEL AND PCB
SCALE 2:1

GREEN/ORANGE	YELLOW	1840542-3
GREEN	YELLOW	1840542-2
GREEN	GREEN	1840542-1
LED1	LED2	PART NUMBER

THIS DRAWING IS A CONTROLLED DOCUMENT.

DIMENSIONS: mm

TOLERANCES UNLESS OTHERWISE SPECIFIED:
0 PLC ±-
1 PLC ±0.25
2 PLC ±0.25
3 PLC ±0.25
4 PLC ±-
ANGLES ±-

PRODUCT SPEC: -
APPLICATION SPEC: -

DWN LINDA DING 30AUG2007
CHK KEITH ZHU 30AUG2007
APVD TEDDY XIONG 30AUG2007

trp CONNECTOR a bel group — DONGGUAN CHINA

MODEL NAME: MAGJACK GANG NON-POE

DESC: 1X4 8G53 GIGABIT TAB DOWN LOW PROFILE W/ LED

SIZE A2 | CAGE CODE | DRAWING NO C-1840542 | RESTRICTED TO -

CUSTOMER DRAWING | SCALE 1:1 | SHEET 1 OF 2 | REV F

xxxxx

Please read our datasheet & drawing disclaimer here.

© COPYRIGHT TRP connector ALL RIGHTS RESERVED

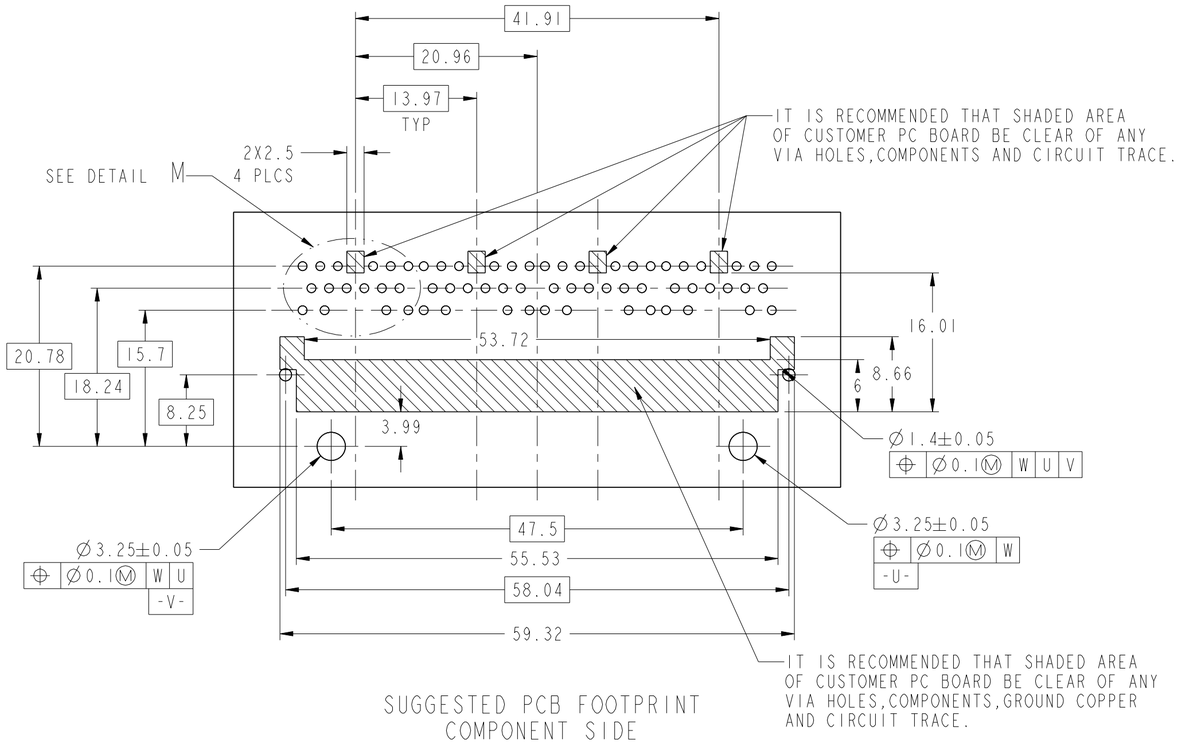

SUGGESTED PCB FOOTPRINT
COMPONENT SIDE
SCALE 2:1

8G53 GIGABIT CIRCUIT △3 △5

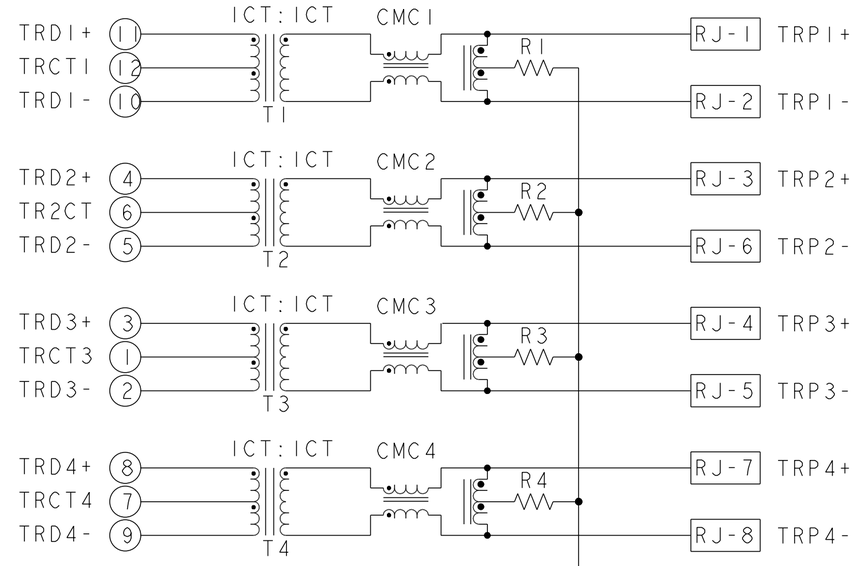

R1-R4=75 Ohms, 1/16W, 5% RESISTORS

C1=1000 pF, 3kV CAPACITOR

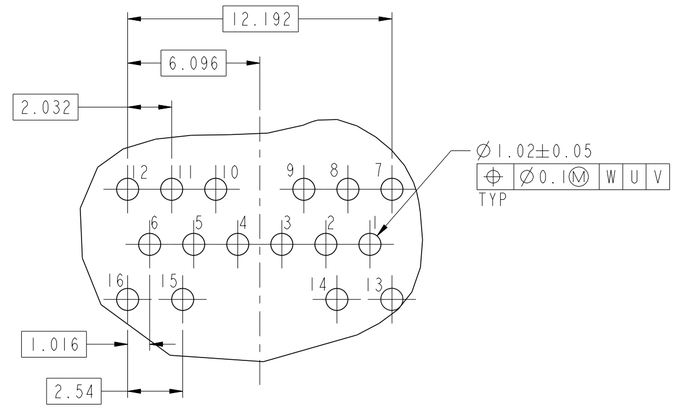

DETAIL M
SCALE 5:1
TYP

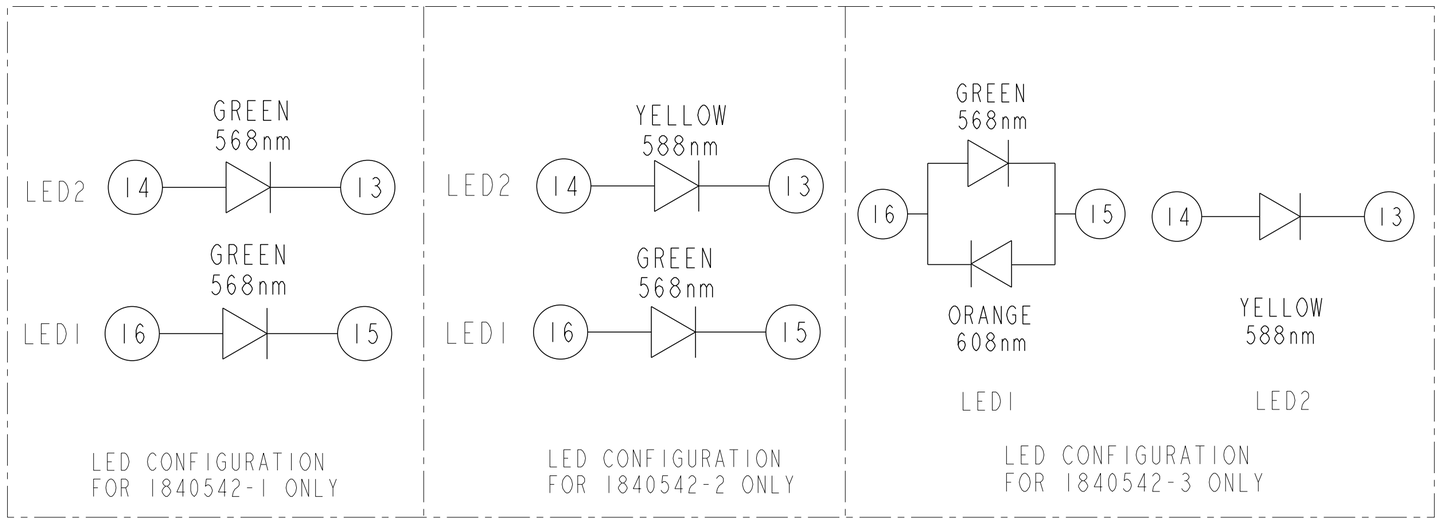

THIS DRAWING IS A CONTROLLED DOCUMENT.		DWN LINDA DING 30AUG2007 CHK KEITH ZHU 30AUG2007 APVD TEDDY XIONG 30AUG2007	trp CONNECTOR a bel group — DONGGUAN CHINA
DIMENSIONS: mm	TOLERANCES UNLESS OTHERWISE SPECIFIED: 0 PLC ±- 1 PLC ±0.25 2 PLC ±0.25 3 PLC ±0.25 4 PLC ±- ANGLES ±-	MODEL NAME MAGJACK GANG NON-POE	DESC 1X4 8G53 GIGABIT TAB DOWN LOW PROFILE W/ LED
PRODUCT SPEC -	APPLICATION SPEC -	SIZE A2 / CAGE CODE / DRAWING NO C-1840542 / RESTRICTED TO -	
CUSTOMER DRAWING		SCALE 1:1	SHEET 2 OF 2 REV F

xxxxx