© COPYRIGHT TRP connector ALL RIGHTS RESERVED

REVISIONS					
P	LTR	DESCRIPTION	DATE	DWN	APVD
	4	LOGO CHANGE	27JUN2013	TY	KZ

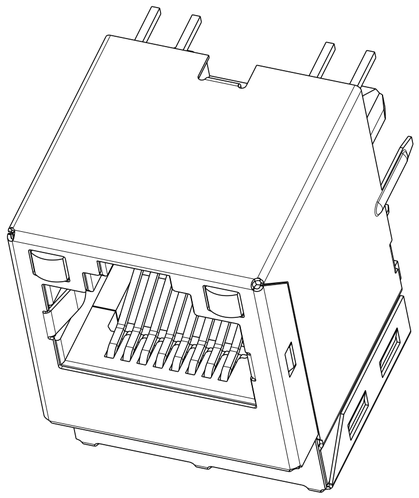

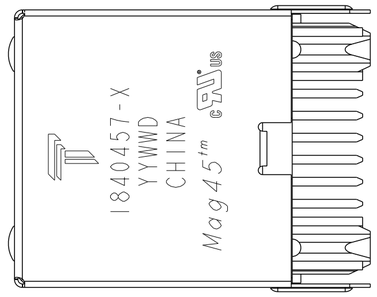

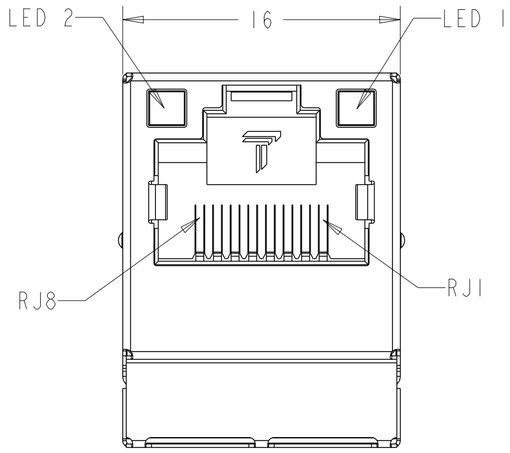

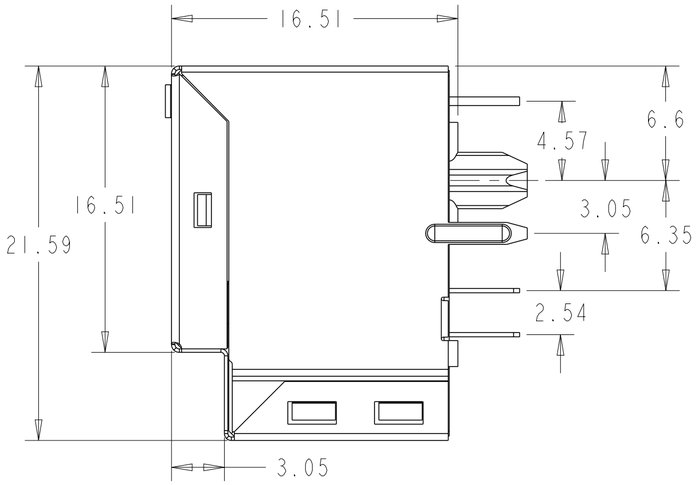

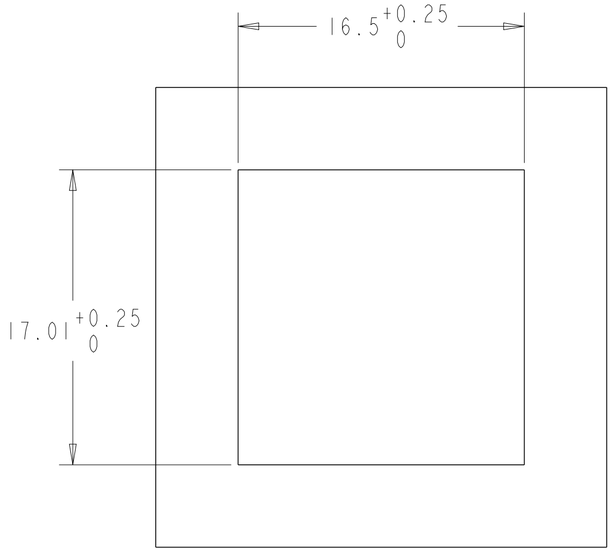

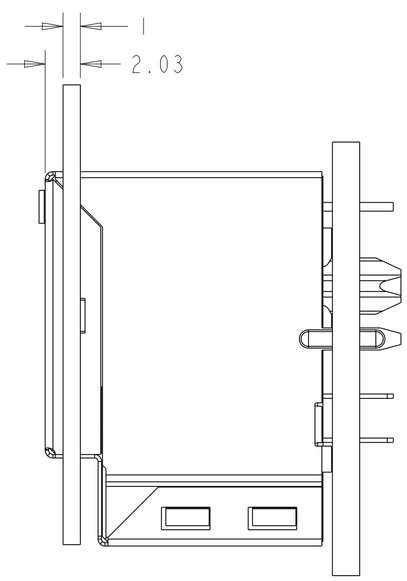

1. MATERIALS
   HOUSING: THERMOPLASTIC, BLACK, FLAMMABILITY RATED UL 94V-0
   SHIELD: BRASS, 0.20mm THICK,
   PREPLATED WITH MIN 0.76um SEMI-BRIGHT NICKEL
   POST DIPPED WITH 2.54um MIN SAC SOLDER AT GROUND PINS.
   CONTACT: PHOSPHOR BRONZE,
   WITH 1.27um MIN OVERALL NICKEL UNDERPLATE AND
   SELECTIVE 1.27um MIN GOLD PLATING AT MATING INTERFACE
   SOLDER TAIL: PHOSPHOR BRONZE,
   WITH 1.27um MIN OVERALL NICKEL UNDERPLATE AND
   PLATED WITH 2.54um MIN TIN
   LED: DIFFUSED EPOXY LENS, 0.50mm SQUARE CARBON STEEL WIREFRAME LEADS
   PREPLATED WITH 2.03um MIN SILVER OVER 1.02um MIN NICKEL
   OVER 1.02um MIN COPPER UNDERPLATE POST PLATED WITH 2.54um MIN TIN

△2 MAGNETICS
   -APPLICATION: 10/100/1000 BASE-T
   -IMPEDANCE: 100 OHMS
   -TURNS RATIO (CHIP:CABLE): 1:1 ALL FOUR PAIRS
   -OPEN CIRCUIT INDUCTANCE (OCL): 350uH MIN @100kHz, 0.1VRMS,
   8mADC BIAS FROM 0°C TO 70°C, ALL FOUR PAIRS
   -ALL FOUR PAIRS BI-DIRECTIONAL
   -PERFORMANCE @ 25°C:
   INSERTION LOSS (IL): 1.1dB MAX FROM 0.5MHz TO 100MHz
   RETURN LOSS (RL): 18dB MIN FROM 0.5MHz TO 40MHz
   12-20LOG(f/80)dB MIN FROM 40.1MHz TO 100MHz
   CROSSTALK ATTENUATION: 35dB MIN FROM 0.5MHz TO 40MHz
   33-20LOG(f/50)dB MIN FROM 40.1MHz TO 100MHz
   COMMON MODE REJECTION RATIO (CMRR): 30dB MIN FROM 0.5MHz TO 100MHz
   -ISOLATION VOLTAGE: COMPLIES WITH IEEE802.3 2002, PARA 40.6.1.1, ITEM b.

△3 THE MAGNETIC ARE SYMMETRICAL AND SUPPORT AUTO-MDIX OPERATION.

4. OPERATING TEMPERATURE: 0 - 70°C

5. LED IS DRIVEN WITH CONSTANT CURRENT AT APPROX 20mA.

   DOMINANT WAVELENGTH(λD)
   GREEN 568nm TYP.at IF=20mA
   YELLOW 588nm TYP.at IF=20mA

   FORWARD VOLTAGE(VF):
   GREEN 2.2V TYP.at IF=20mA
   YELLOW 2.1V TYP.at IF=20mA

6. ALL DIMENSIONS TO BE NOMINAL UNLESS OTHERWISE NOTED

7. RJ45 CAVITY CONFORMS TO FCC RULES AND REGULATION PART 68 SUBPART F.

LED 1	LED 2	PART NUMBER
GRN/YEL	GRN/YEL	1840456-4
YELLOW	GREEN	1840456-3
GREEN	YELLOW	1840456-2
GREEN	GREEN	1840456-1

THIS DRAWING IS A CONTROLLED DOCUMENT.

DIMENSIONS: mm

TOLERANCES UNLESS OTHERWISE SPECIFIED:
0 PLC ±0.25
1 PLC ±0.25
2 PLC ±0.25
3 PLC ±0.25
4 PLC ±-
ANGLES ±-

MATERIAL -

FINISH -

DWN TOMMY REN 26FEB2008
CHK FRANK LIU 26FEB2008
APVD TEDDY XIONG 26FEB2008
PRODUCT SPEC -
APPLICATION SPEC -
WEIGHT -

TRP connector
Dongguan China

NAME IXI MAG45(TM) MODULAR JACK, VERTICAL TYPE, 4G59 CIRCUIT,WITH LED

SIZE	CAGE CODE	DRAWING NO	RESTRICTED TO
A2		C-1840456	-

CUSTOMER DRAWING | SCALE 3:1 | SHEET 1 OF 2 | REV 4

xxxxx

Please read our datasheet & drawing disclaimer here.

© COPYRIGHT TRP connector ALL RIGHTS RESERVED

4G59 GIGABIT CIRCUIT △2 △3

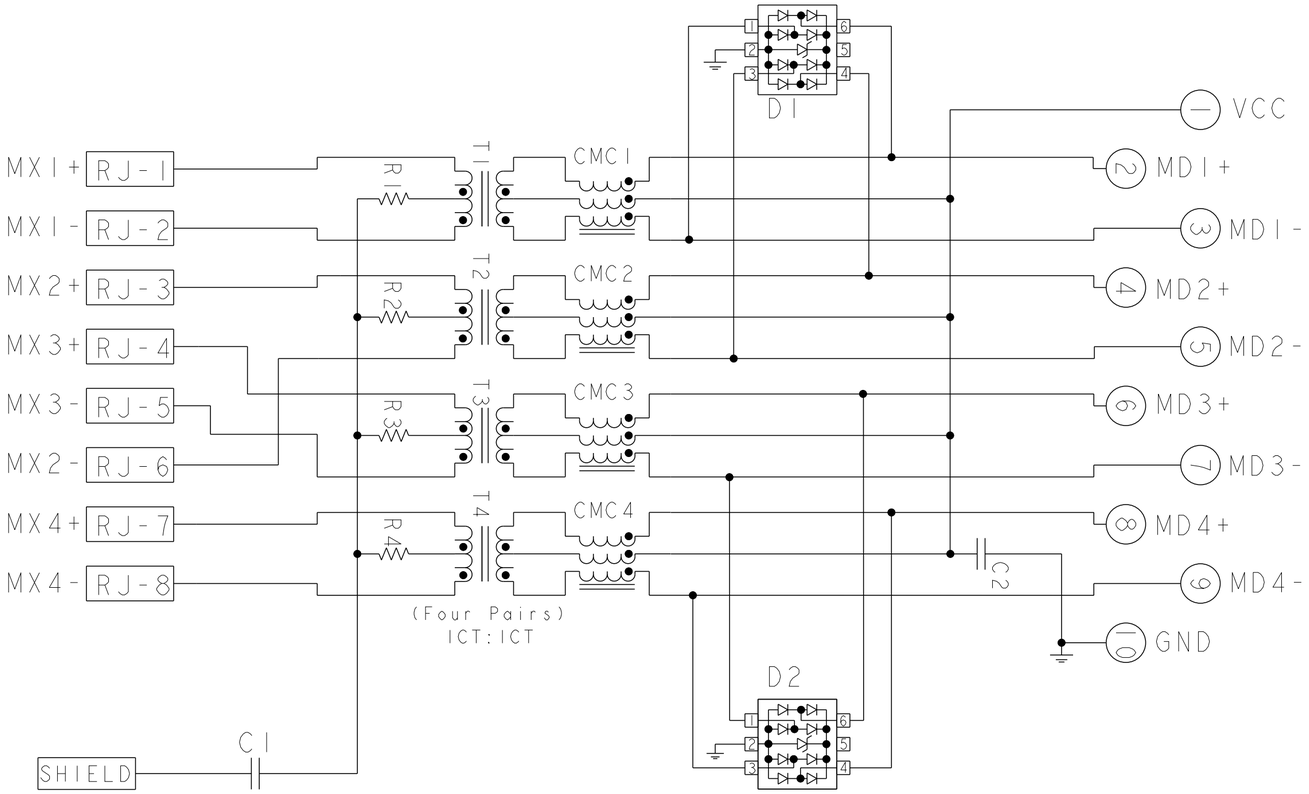

C1 = 1000pF, 2KV, CAPACITOR
C2 = 0.1uF,50V, CAPACITOR
R1 - R4 = 75 ohms, RESISTORS
D1 - D2 = SRV05-4, TVS DIODE ARRAYS

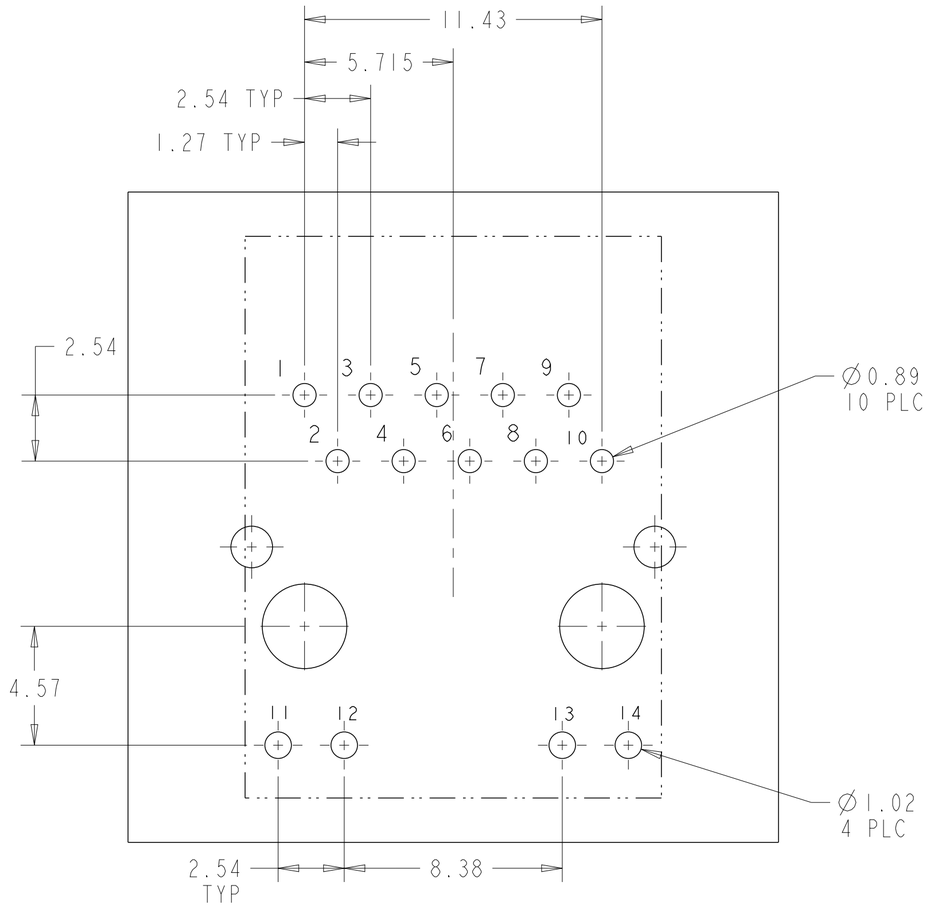

SUGGESTED PCB LAYOUT(TOL:±0.05)
(COMPONENT SIDE VIEW)

SINGLE COLOR LED

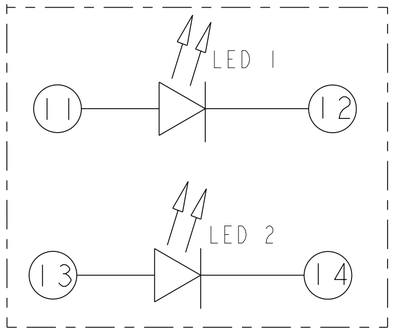

BI-COLOR LED

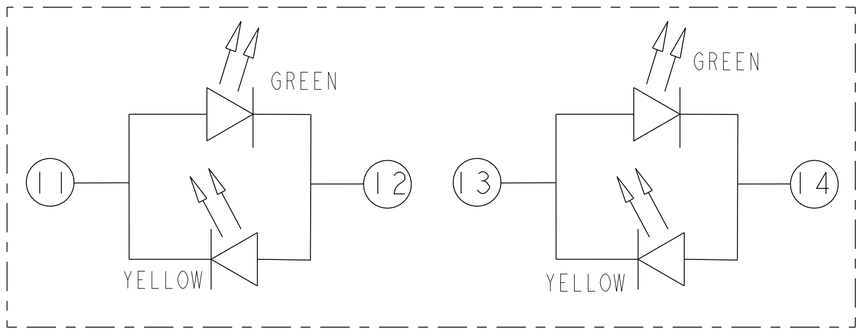

THIS DRAWING IS A CONTROLLED DOCUMENT.		DWN TOMMY REN 26FEB2008	TRP connector Dongguan China
DIMENSIONS: mm	TOLERANCES UNLESS OTHERWISE SPECIFIED: 0 PLC ±0.25, 1 PLC ±0.25, 2 PLC ±0.25, 3 PLC ±0.25, 4 PLC ±. ANGLES ±.	CHK FRANK LIU 26FEB2008	NAME 1X1 MAG45(TM) MODULAR JACK, VERTICAL TYPE, 4G59 CIRCUIT,WITH LED
		APVD TEDDY XIONG 26FEB2008	SIZE A2 / CAGE CODE / DRAWING NO C-1840456 / RESTRICTED TO -
		PRODUCT SPEC -	
		APPLICATION SPEC -	
MATERIAL -	FINISH -	WEIGHT -	CUSTOMER DRAWING / SCALE 3:1 / SHEET 2 OF 2 / REV 4

xxxxx