THIS DRAWING AND THE SUBJECT MATTER SHOWN THEREON ARE CONFIDENTIAL AND THE PROPERTY OF BEL/STEWART/TRP CONNECTOR AND SHALL NOT BE REPRODUCED, COPIED, OR USED IN ANY MANNER WITHOUT THE WRITTEN CONSENT OF TRP CONNECTOR.

PRODUCT MAY BE PROTECTED BY ONE OR MORE OF THE FOLLOWING US PATENTS:
5736910 5939955 6425781 6428361 6554638 6840817 7123117
7429195 7717749 7808751 6217391 6149050 7924130

REVISIONS

P	LTR	DESCRIPTION	DATE	DWN	APVD
	E	EC-1411035, LOGO CHANGE	26DEC2014	JC	TY

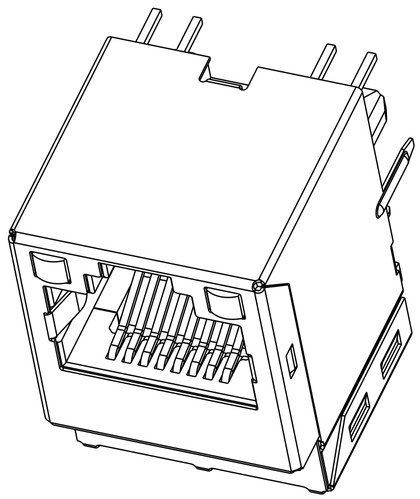

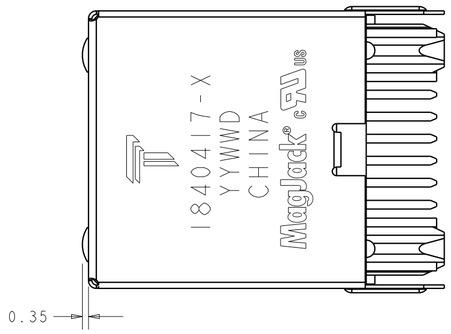

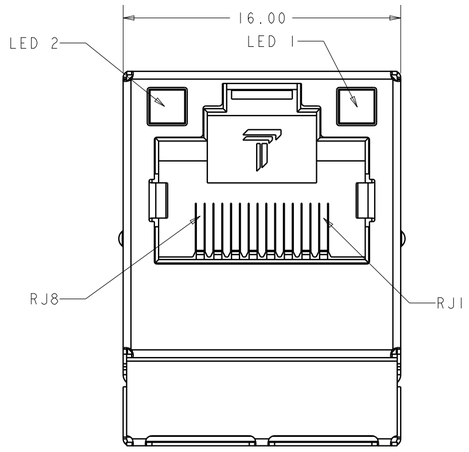

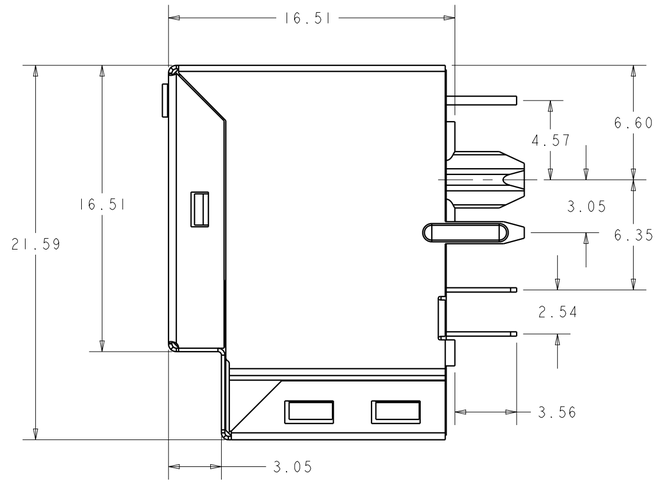

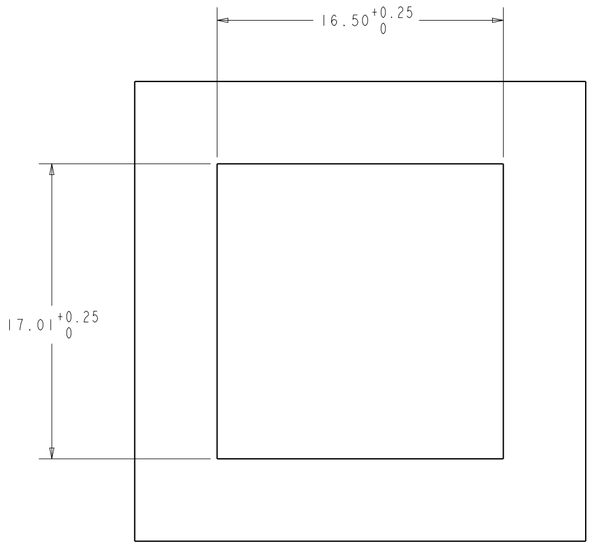

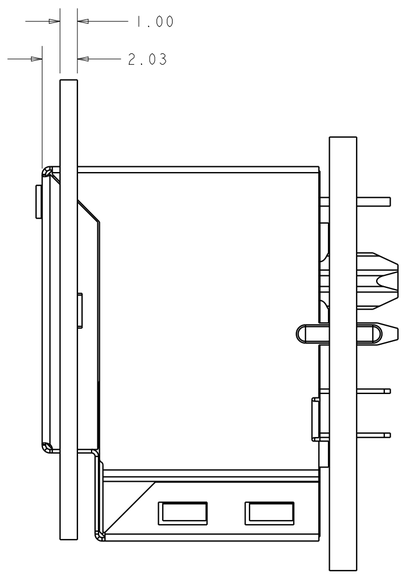

1. MATERIALS
   HOUSING: THERMOPLASTIC, BLACK, FLAMMABILITY RATED UL 94V-0
   SHIELD: BRASS, 0.20mm THICK,
   PREPLATED WITH MIN 0.76um SEMI-BRIGHT NICKEL
   POST DIPPED WITH 2.54um MIN SAC SOLDER AT GROUND PINS.
   CONTACTS: PHOSPHOR BRONZE, PLATED WITH 1.27um MIN OVERALL NICKEL UNDERPLATE, SELECTIVE 1.27um MIN GOLD AT MATING INTERFACE AND 2.54um MIN MATTE TIN ON SOLDER TAILS. OR 1.27um MIN NICKEL UNDERPLATE, WITH 0.05um GOLD PLATING OVER 0.76um MIN PALLADIUM NICKEL PLATING AT MATING INTERFACE AND 2.54um MIN MATTE TIN ON SOLDER TAILS.
   SOLDER TAIL: PHOSPHOR BRONZE,
   WITH 1.27um MIN OVERALL NICKEL UNDERPLATE AND
   PLATED WITH 2.54um MIN TIN
   LED: DIFFUSED EPOXY LENS, 0.50mm SQUARE CARBON STEEL WIREFRAME LEADS
   PREPLATED WITH 2.03um MIN SILVER OVER 1.02um MIN NICKEL
   OVER 1.02um MIN COPPER UNDERPLATE POST PLATED WITH 2.54um MIN TIN

△2 MAGNETICS
   -APPLICATION: 10/100/1000 BASE-T
   -IMPEDANCE: 100 OHMS
   -TURNS RATIO (CHIP:CABLE): 1:1 ALL FOUR PAIRS
   -OPEN CIRCUIT INDUCTANCE (OCL): 350uH MIN @100kHz, 0.1VRMS, 8mADC BIAS FROM 0°C TO 70°C, ALL FOUR PAIRS
   -ALL FOUR PAIRS BI-DIRECTIONAL
   -PERFORMANCE @ 25°C:
   INSERTION LOSS (IL): 1.1dB MAX FROM 0.5MHz TO 100MHz
   RETURN LOSS (RL): 18dB MIN FROM 0.5MHz TO 40MHz
   12-20LOG(f/80)dB MIN FROM 40.1MHz TO 100MHz
   CROSSTALK ATTENUATION: 35dB MIN FROM 0.5MHz TO 40MHz
   33-20LOG(f/50)dB MIN FROM 40.1MHz TO 100MHz
   COMMON MODE REJECTION RATIO (CMRR): 30dB MIN FROM 0.5MHz TO 100MHz
   -ISOLATION VOLTAGE: COMPLIES WITH IEEE802.3 2002, PARA 40.6.1.1, ITEM b.

△3 THE MAGNETIC ARE SYMMETRICAL AND SUPPORT AUTO-MDIX OPERATION.

4. OPERATING TEMPERATURE: 0 ~ 70°C

5. LED IS DRIVEN WITH CONSTANT CURRENT AT APPROX 20mA.

   DOMINANT WAVELENGTH(λD)
   GREEN 568nm TYP.at IF=20mA
   YELLOW 588nm TYP.at IF=20mA

   FORWARD VOLTAGE(VF):
   GREEN 2.2V TYP.at IF=20mA
   YELLOW 2.1V TYP.at IF=20mA

6. ALL DIMENSIONS TO BE NOMINAL UNLESS OTHERWISE NOTED

7. RJ45 CAVITY CONFORMS TO FCC RULES AND REGULATION PART 68 SUBPART F.

GRN/YEL	GRN/YEL	1840417-4
YELLOW	GREEN	1840417-3
GREEN	YELLOW	1840417-2
GREEN	GREEN	1840417-1
LED 1	LED 2	PART NUMBER

THIS DRAWING IS A CONTROLLED DOCUMENT.

DIMENSIONS: mm

TOLERANCES UNLESS OTHERWISE SPECIFIED:
0 PLC ±0.25
1 PLC ±0.25
2 PLC ±0.25
3 PLC ±0.25
4 PLC ±-
ANGLES ±-

PRODUCT SPEC: 108-2100
APPLICATION SPEC: -

DWN TOMMY REN 18AUG2006
CHK KEITH ZHU 18AUG2006
APVD TEDDY XIONG 18AUG2006

trp CONNECTOR a bel group — DONGGUAN CHINA

MODEL NAME: MAGJACK SINGLE NON-PoE

DESC: 1X1,MAGJACK, VERTICAL 4G46P1, GIGABIT CIRCUIT, W/ LEDS

SIZE	CAGE CODE	DRAWING NO.	RESTRICTED TO
A2		C-1840417	-

CUSTOMER DRAWING | SCALE 4:1 | SHEET 1 OF 2 | REV E

xxxxx

Please read our datasheet & drawing disclaimer here.

© COPYRIGHT TRP connector ALL RIGHTS RESERVED

4G46PI GIGABIT CIRCUIT △2 △3

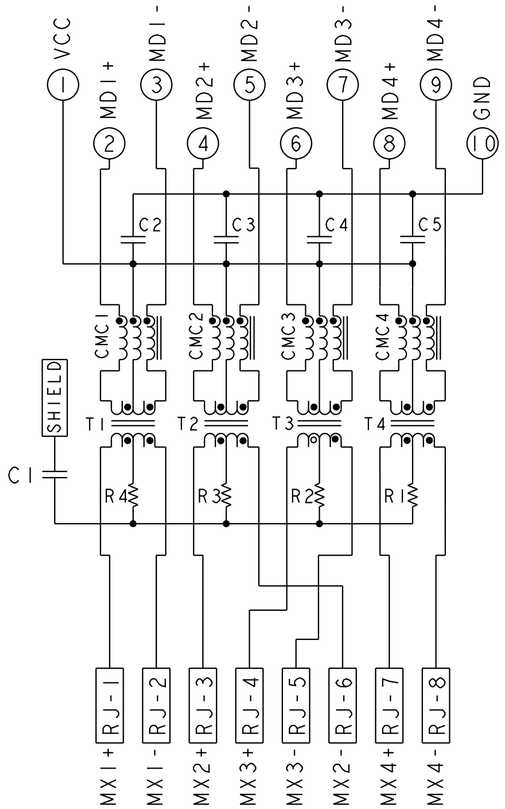

C2 - C5 = 0.1uF,50V, CAPACITOR
C1 = 1000pF, 2KV, CAPACITOR
R1 - R4 = 75 ohms, RESISTOR

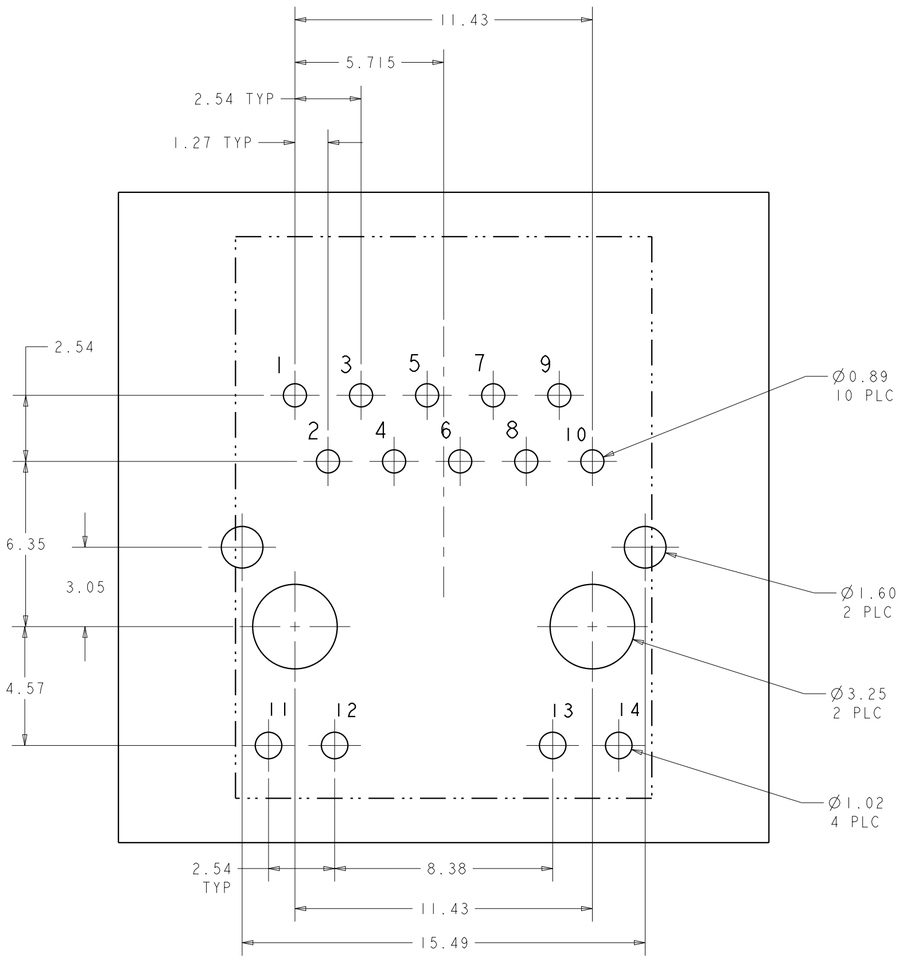

SUGGESTED PCB LAYOUT(TOL:±0.05)
(COMPONENT SIDE VIEW)

SINGLE COLOR LED

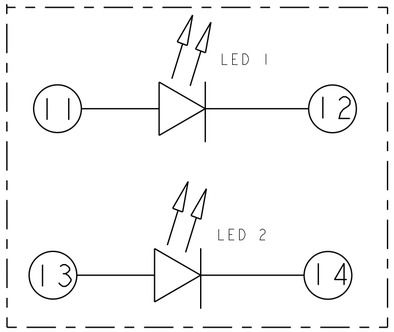

BI-COLOR LED

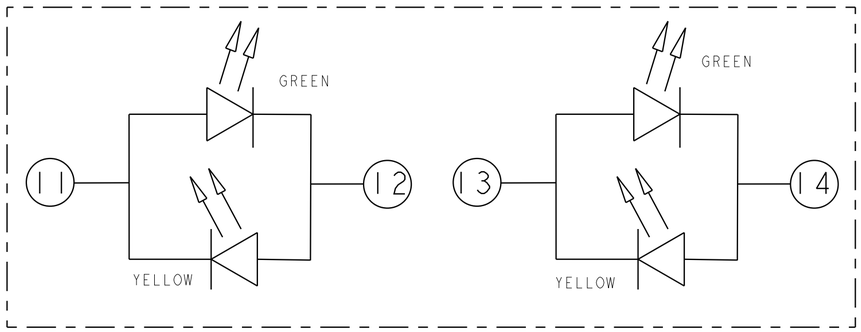

THIS DRAWING IS A CONTROLLED DOCUMENT.		DWN TOMMY REN 18AUG2006	trp CONNECTOR a bel group — DONGGUAN CHINA
DIMENSIONS: mm	TOLERANCES UNLESS OTHERWISE SPECIFIED: 0 PLC ±0.25; 1 PLC ±0.25; 2 PLC ±0.25; 3 PLC ±0.25; 4 PLC ±.; ANGLES ±.	CHK KEITH ZHU 18AUG2006	DESC: 1X1, MAGJACK, VERTICAL 4G46PI, GIGABIT CIRCUIT, W/ LEDS
		APVD TEDDY XIONG 18AUG2006	
PRODUCT SPEC 108-2100	APPLICATION SPEC -	MODEL NAME MAGJACK SINGLE NON-PoE	SIZE A2 · CAGE CODE · DRAWING NO C-1840417 · RESTRICTED TO -
		CUSTOMER DRAWING	SCALE 4:1 · SHEET 2 OF 2 · REV E

xxxxx