THIS DRAWING AND THE SUBJECT MATTER SHOWN THEREON ARE CONFIDENTIAL AND THE PROPERTY OF BEL/STEWART/TRP CONNECTOR AND SHALL NOT BE REPRODUCED, COPIED, OR USED IN ANY MANNER WITHOUT THE WRITTEN CONSENT OF TRP CONNECTOR.

PRODUCT MAY BE PROTECTED BY ONE OR MORE OF THE FOLLOWING US PATENTS:
5736910 5939955 6425781 6428361 6554638 6840817 7123117
7429195 7717749 7808751 6217391 6149050 7924130

REVISIONS

P	LTR	DESCRIPTION	DATE	DWN	APVD
	D	EC-14110035, LOGO CHANGE	26DEC2014	JC	TY

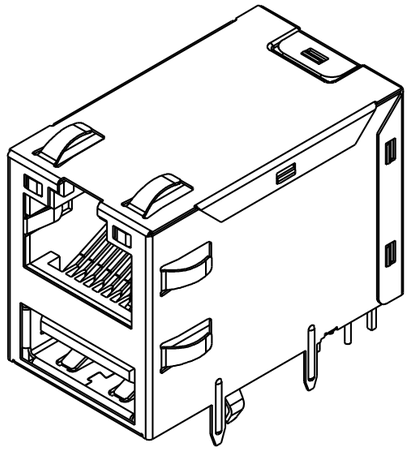

2 URG18ET GIGABIT CIRCUIT

C1=1000pF, 2KV, ±10%, DECOUPLING CAPACITOR.
R1-R4=75 ohms, 1/16W, ±5%, RESISTORS.

1 RJ45 MATERIALS
- -HOUSING: THERMOPLASTIC, BLACK,FLAMMABILITY RATED UL 94V-0
- -SHIELD: BRASS, 0.2 mm THICK,
  PREPLATED WITH MIN 0.76 um SEMI-BRIGHT NICKEL
  POST DIPPED WITH 2.54 um MIN SAC SOLDER AT GROUND PINS
- -CONTACT: PHOSPHER BRONZE, WITH 1.27 um MIN OVERALL NICKEL UNDERPLATE
  AND SELECTIVE 1.27 um MIN GOLD PLATING AT MATING INTERFACE
- -SOLDER TAIL: COPPER STEEL, PLATED WITH 2.54 um MIN MATTE TIN
- -LED: DIFFUSED EPOXY LENS, 0.5 mm SQUARE CARBON STEEL WIREFRAME
  LEADS PREPLATED WITH 2.03 um MIN SILVER OVER 1.02 um MIN NICKEL
  OVER 1.02 um MIN COPPER UNDERPLATE.
  POST PLATED WITH 2.54 um MIN MATTE TIN OR SAC TIN SOLDER DIP

USB MATERIALS:
- -HOUSING:THERMOPLASTIC,FLAMMABILITY RATED UL94V-0
- -CONTACT:COPPER ALLOY WITH 0.76 MIN GOLD PLATING OVER 1.27 um MIN
  OVERALL NICKEL UNDERPLATE
- -SHELL:COPPER ALLOY,PREPLATED WITH MIN 0.76 um SEMI-BRIGHT NICKEL,
  2.54 um TIN PLATED

2 MAGNETICS
- -APPLICATION: 10/100/1000 BASE-T, EXTENDED TEMPERATURE
- -IMPEDANCE: 100 OHMS
- -TURNS RATIO(CHIP:CABLE): 1:1 ALL FOUR PAIRS
- -OPEN CIRCUITINDUCTANCE(OCL):350uH MIN @100kHz, 0.1 VRMS,
  8mADC BIAS FROM -40°C TO 85°C, ALL FOUR PAIRS
- -ALL FOUR PAIRS BI-DIRECTIONAL
- -PERFORMANCE @ 25°C:
  INSERTION LOSS (IL): 1.1 dB MAX FROM 0.5MHz TO 100MHz
  RETURN LOSS (RL): 18dB MIN FROM 0.5MHz TO 40MHz
  12-20LOG(f/80)dB MIN FROM 40.1 MHz TO 100MHz
  CROSSTALK ATTENUATION: 35 dB MIN FROM 0.5 MHz TO 40 MHz
  33-20LOG(f/50) dB MIN FROM 40.1 MHz TO 100 MHz
  COMMOM MODE REJECTION RATIO (CMRR): 30dBMIN FROM 0.5MHz TO 100MHz
- -ISOLATION VOLTAGE:2250VDC(MAX) FOR 60 SECONDS WITH A RISE TIME
  OF 500V/SEC AND WITH ALL PORTS CONNECTED
  (FOR SINGLE PORT PRODUCT ISOLATION VOLTAGE:2250VDC(MAX) FOR 60
  SECONDS WITH A RISE TIME OF 500V/SEC)

3. OPERATING TEMPERATURE -40°C TO +85°C.

4 LED IS DRIVEN WITH CONSTANT CURRENT APPROX 20 mA
- -DOMINANT WAVE LENGTH(λD):GREEN 568 nm TYP, AT IF=20mA
  FORWARD VOLTAGE(VF):GREEN 2.2V AT IF=20mA
- -DOMINANT WAVELENGTH (λD): YELLOW 588 nm TYP. @ IF=20mA
  FORWARD VOLTAGE (VF): YELLOW 2.1V TYP. @ IF=20mA
- -DOMINANT WAVELENGTH (λD): ORANGE 605 nm TYP. @ IF=20mA
  FORWARD VOLTAGE (VF): ORANGE 2.1V TYP. @ IF=20mA

5 RJ45 CAVITY CONFORMS TO FCC RULES AND REGULATION PART 68 SUBPART F.

6 TRP LOGO, PART NUMBER, DATE CODE, COUNTRY OF ORIGIN AND AGENCY LOGO TO BE MARKED IN APPROXIMATE LOCATION SHOWN.
DATE CODE: "YY" IS YEAR, "WW" IS WORK WEEK, "D" IS DAY OF WEEK, WITH SUNDAY=1

7 MATING INTERFACE COMPLIES WITH USB SPECIFICATION REV 2.0.

8. THESE PARTS ARE COMPLIANT WITH WAVE SOLDERING PROCESS, PEAK SOLDERING TEMPERATURE IS 260°C MAX, 10 SECONDS MAX.

GREEN/ORANGE	YELLOW	1-1840036-3
GREEN	GREEN	1840036-1
LEFT LED	RIGHT LED	PART NUMBER

THIS DRAWING IS A CONTROLLED DOCUMENT.

DIMENSIONS: mm

TOLERANCES UNLESS OTHERWISE SPECIFIED:
0 PLC ±·
1 PLC ±·
2 PLC ±0.25
3 PLC ±0.25
4 PLC ±·
ANGLES ±·

PRODUCT SPEC 108-104005

APPLICATION SPEC -

DWN PAUL PENG 28FEB2011
CHK QUENTIN LIU 28FEB2011
APVD LIJUN RAO 28FEB2011

trp CONNECTOR a bel group — DONGGUAN CHINA

MODEL NAME: MAGJACK OVER USB NON-PoE

DESC: MAGJACK OVER SINGLE USB URG18ET, GIGABIT CIRCUIT, W/ LEDS

SIZE A2 | CAGE CODE | DRAWING NO C-1840036 | RESTRICTED TO -

CUSTOMER DRAWING | SCALE 3:1 | SHEET 1 OF 4 | REV D

xxxxx

Please read our datasheet & drawing disclaimer here.

© COPYRIGHT TRP connector ALL RIGHTS RESERVED

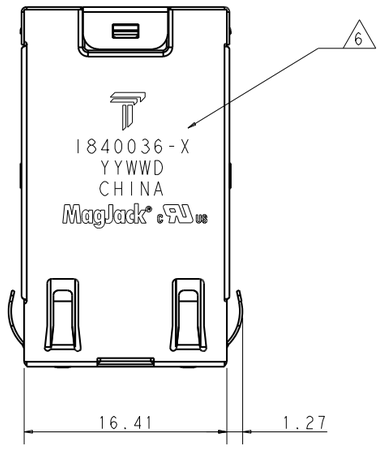

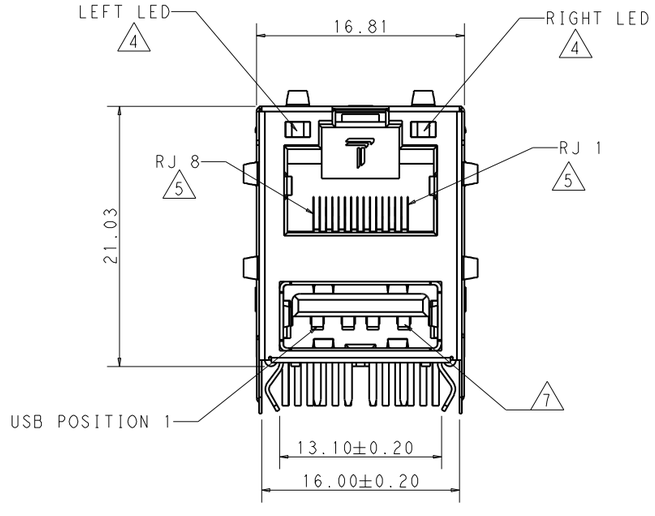

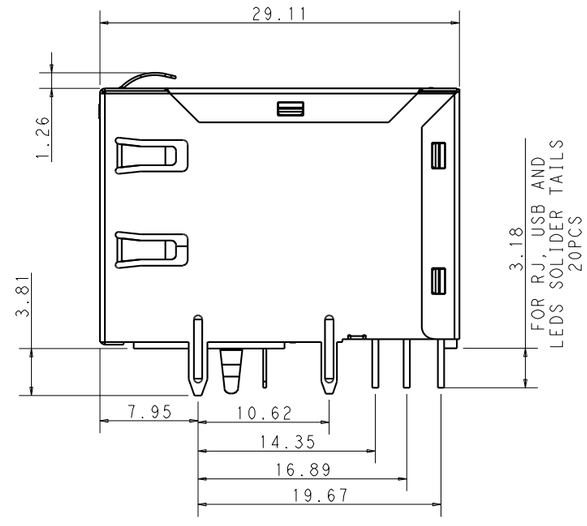

THIS DRAWING IS A CONTROLLED DOCUMENT.		DWN PAUL PENG 28FEB2011	trp CONNECTOR a bel group — DONGGUAN CHINA
DIMENSIONS: mm	TOLERANCES UNLESS OTHERWISE SPECIFIED: 0 PLC ±- ; 1 PLC ±- ; 2 PLC ±0.25 ; 3 PLC ±0.25 ; 4 PLC ±- ; ANGLES ±-	CHK QUENTIN LIU 28FEB2011	
		APVD LIJUN RAO 28FEB2011	
PRODUCT SPEC 108-104005	APPLICATION SPEC -	MODEL NAME MAGJACK OVER USB NON-PoE	DESC MAGJACK OVER SINGLE USB URG18ET, GIGABIT CIRCUIT, W/ LEDS
		SIZE A2 / CAGE CODE / DRAWING NO C-1840036 / RESTRICTED TO -	
CUSTOMER DRAWING		SCALE 3:1 / SHEET 2 OF 4 / REV D	

xxxxx

© COPYRIGHT TRP connector ALL RIGHTS RESERVED

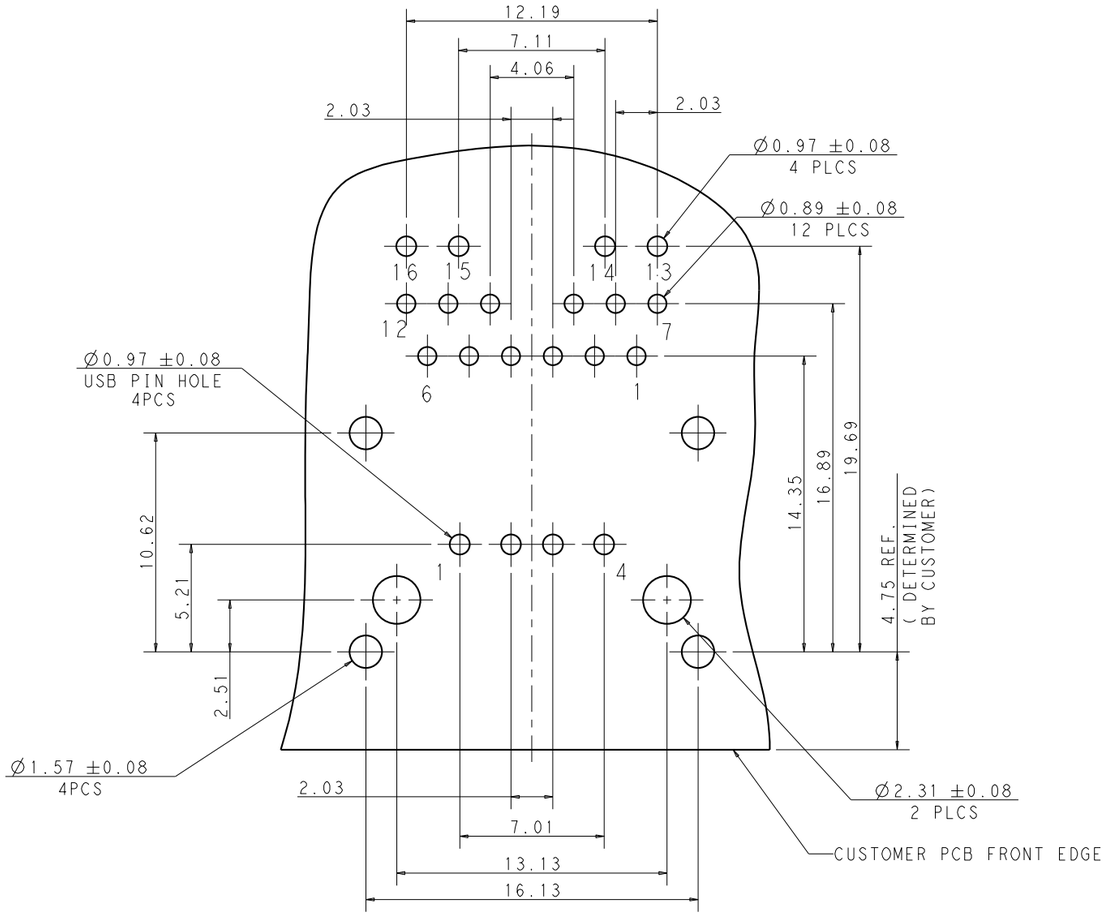

RECOMMENDED PCB LAYOUT(TOL: ±0.08)
COMPONENT SIDE SHOWN

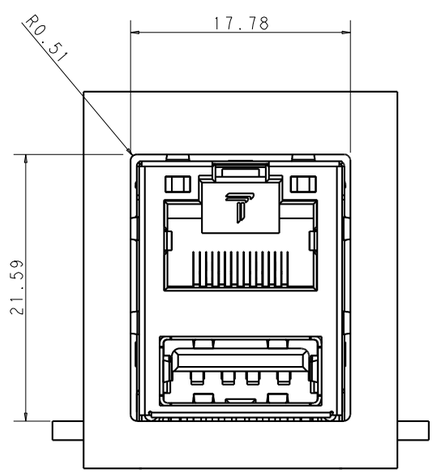

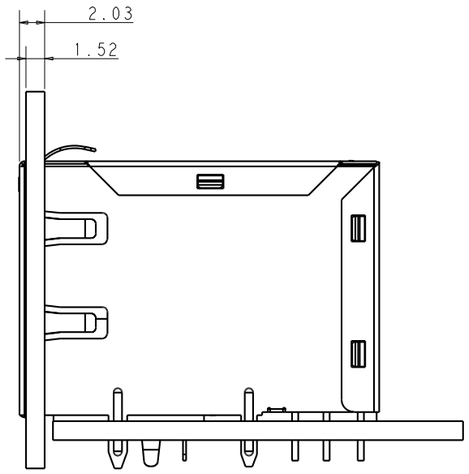

SUGGESTED PANEL CUT-OUT DIMENSION (TOL: ±0.1)

THIS DRAWING IS A CONTROLLED DOCUMENT.		DWN PAUL PENG 28FEB2011	trp CONNECTOR a bel group — DONGGUAN CHINA
DIMENSIONS: mm	TOLERANCES UNLESS OTHERWISE SPECIFIED: 0 PLC ±- 1 PLC ±- 2 PLC ±0.25 3 PLC ±0.25 4 PLC ±- ANGLES ±-	CHK QUENTIN LIU 28FEB2011	
PRODUCT SPEC 108-104005	APPLICATION SPEC -	APVD LIJUN RAO 28FEB2011	MODEL NAME MAGJACK OVER USB NON-PoE
DESC MAGJACK OVER SINGLE USB URG18ET, GIGABIT CIRCUIT, W/ LEDS			
SIZE A2	CAGE CODE	DRAWING NO C-1840036	RESTRICTED TO -
CUSTOMER DRAWING	SCALE 3:1	SHEET 3 OF 4	REV D

xxxxx

© COPYRIGHT TRP connector ALL RIGHTS RESERVED

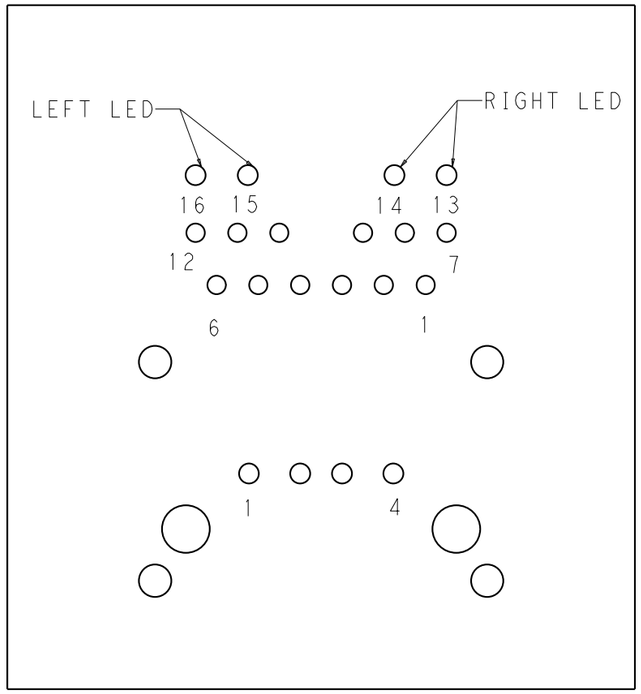

SCALE 5:1

FRONT PRINT
COMPONENT SIDE

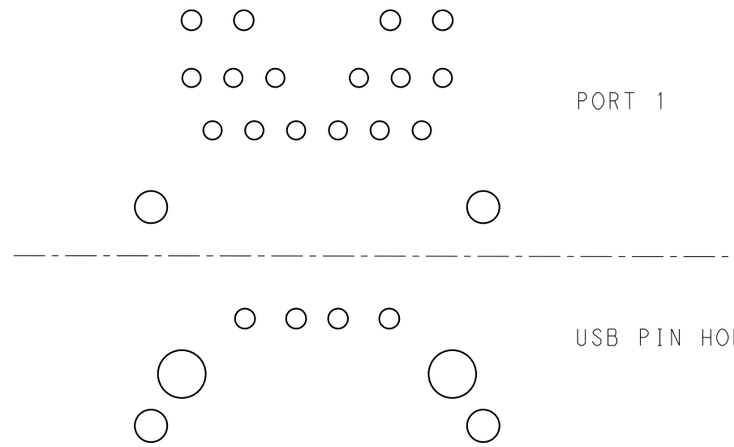

SINGLE COLOR LED

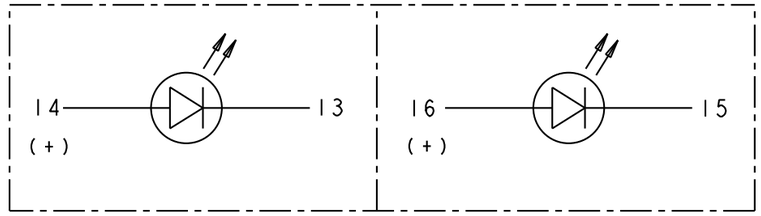

BI-COLOR LED

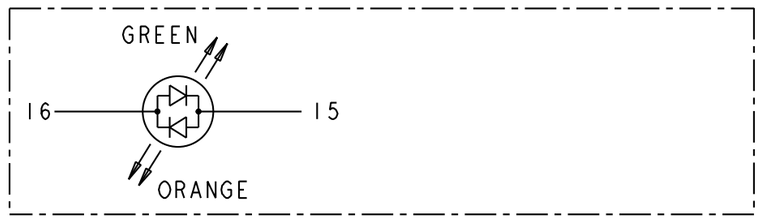

THIS DRAWING IS A CONTROLLED DOCUMENT.		DWN PAUL PENG 28FEB2011	trp CONNECTOR a bel group — DONGGUAN CHINA
DIMENSIONS: mm	TOLERANCES UNLESS OTHERWISE SPECIFIED: 0 PLC ±· 1 PLC ±· 2 PLC ±0.25 3 PLC ±0.25 4 PLC ±· ANGLES ±·	CHK QUENTIN LIU 28FEB2011	DESC MAGJACK OVER SINGLE USB URG18ET, GIGABIT CIRCUIT, W/ LEDS
PRODUCT SPEC 108-104005	APPLICATION SPEC -	APVD LIJUN RAO 28FEB2011	MODEL NAME MAGJACK OVER USB NON-PoE
SIZE A2	CAGE CODE	DRAWING NO C-1840036	RESTRICTED TO -
CUSTOMER DRAWING	SCALE 3:1	SHEET 4 OF 4	REV D

xxxxx