THE INFORMATION CONTAINED HEREIN IS CONSIDERED "PROPRIETARY" TO BEL FUSE INC. AND SHALL NOT BE COPIED, REPRODUCED OR DISCLOSED WITHOUT THE WRITTEN APPROVAL OF BEL FUSE INC.

LED 2 & 4 POLARITY			LED 1 & 3 POLARITY		
PIN 15	PIN 16	COLOR	PIN 17	PIN 18	COLOR
−	+	ORANGE	−	+	ORANGE
+	−	GREEN	+	−	GREEN

PRELIMINARY

RoHS

ELECTRICAL CHARACTERISTICS @ 25°C

TURNS RATIO

TP1	1CT : 1CT ±2%
TP2	1CT : 1CT ±2%
TP3	1CT : 1CT ±2%
TP4	1CT : 1CT ±2%

OCL @ 100kHz/100mVRMS

8mA DC BIAS (0°C – 70°C)	180 µH MIN.
19mA DC BIAS (0°C – 70°C)	120 µH MIN.

PARAMETER		MAGNITUDE(IN dB)	FREQUENCY(IN MHZ) START	FREQUENCY(IN MHZ) END
INSERTION LOSS	SDD12,SDD21	-0.004(fMHz)-0.4 MAX	1	150
RETURN LOSS	SDD11,SDD22	-20 MIN	1	40
		-20+15LOG(f/40MHZ) MIN	40	150
ALINE NEAR END CROSSTALK	SDDXY'	-46+7LOG(f/125MHz) MIN	1	150
NEAR END CROSSTALK	SDDXY	-35 MIN	1	40
		-35+15LOG(f/40MHz) MIN	40	150
IMPEDANCE BALANCE	SDC11	-34 MIN	1	40
		-34+15LOG(f/40MHz) MIN	40	150
	SCD22	-42 MIN	1	30
		-38+19.2LOG(f/50MHz) MIN	30	150
MODE CONVERSION	SDC12	-35 MIN	1	40
		-35+17LOG(f/40MHz) MIN	40	150
	SDC21	-30 MIN	1	40
		-30+11LOG(f/40MHz) MIN	40	150
COMMON MODE REJECTION	SCC21	-25 MIN	1	150

HIPOT (Isolation Voltage): 2250 VDC

100% OF PRODUCTION TESTED TO COMPLY WITH IEEE 802.3 ISOLATION REQUIREMENTS.

NOTE: PORT-TO-PORT ISOLATION NOT INCLUDED .

BALANCED DC LINE CURRENT 720 mA MAX. @ 57 VDC CONTINUOUS

1.2A MAX. @ 57 VDC FOR 200 MILLISECONDS

LEDS 1, 2, 3 AND 4

VF (FORWARD VOLTAGE)	IF=20mA	ORANGE 2.0V TYP.
		GREEN 2.2V TYP.
λD (DOMINANT WAVELENGTH)	IF=20mA	ORANGE 605nm TYP.
		GREEN 570nm TYP.

LED 2 & 4

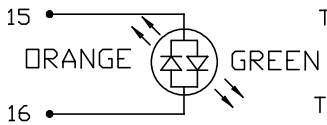

LED 1 & 3

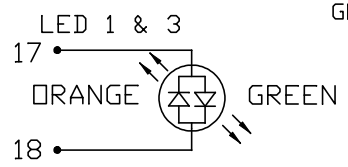

SCHEMATIC

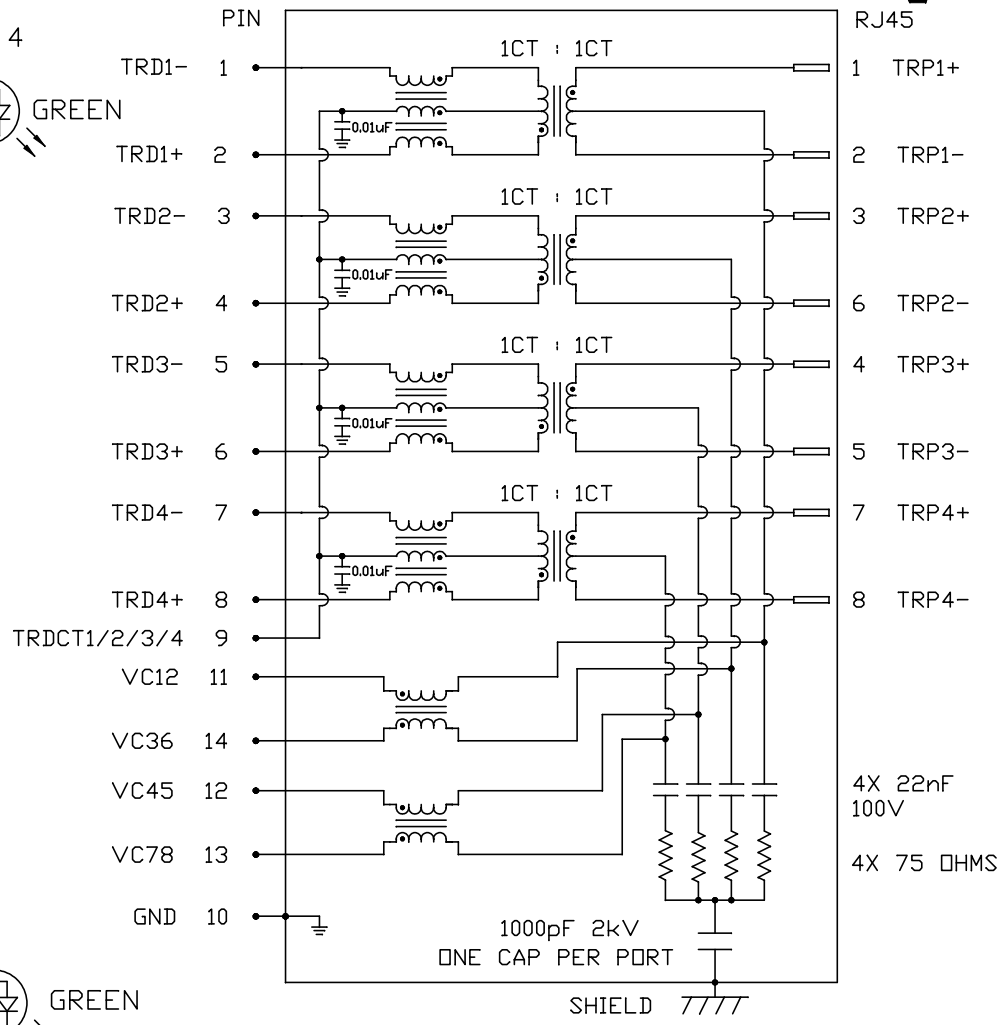

REV. :	PA	PAGE :	2

ORIGINATED BY: CHOW WANCHUNG DATE: 2015-10-16	TITLE: 2X4 2.5 gigabit MagJack® 4PPoE PATENTED	PART NO. / DRAWING NO.: 0895-2B4J-JD FILE NAME: 0895-2B4J-JD_PA.DWG	STANDARD DIM. TOL. IN INCH: .X, .XX, .XXX [ ] METRIC DIM. AS REF. UNIT : INCH [mm] SCALE : N/A SIZE : A4
DRAWN BY: LI ZHENG ZHONG DATE: 2015-10-16			

bel MAGNETIC SOLUTIONS
a bel group

This document is electronically generated. This is a controlled copy if used internally

Please read our datasheet & drawing disclaimer here.

THE INFORMATION CONTAINED HEREIN IS CONSIDERED "PROPRIETARY" TO BEL FUSE INC. AND SHALL NOT BE COPIED, REPRODUCED OR DISCLOSED WITHOUT THE WRITTEN APPROVAL OF BEL FUSE INC.

PRELIMINARY

RoHS

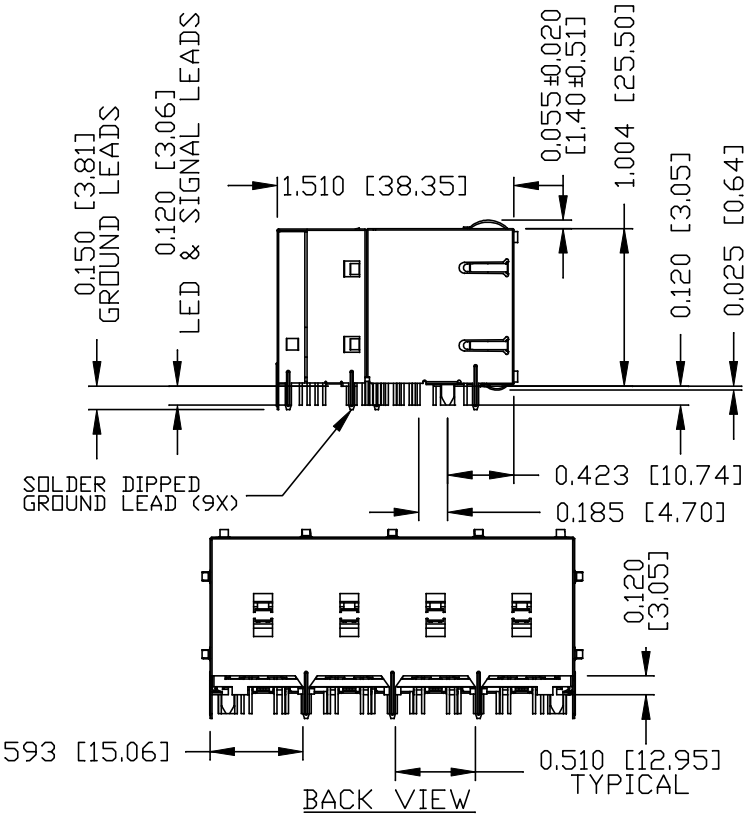

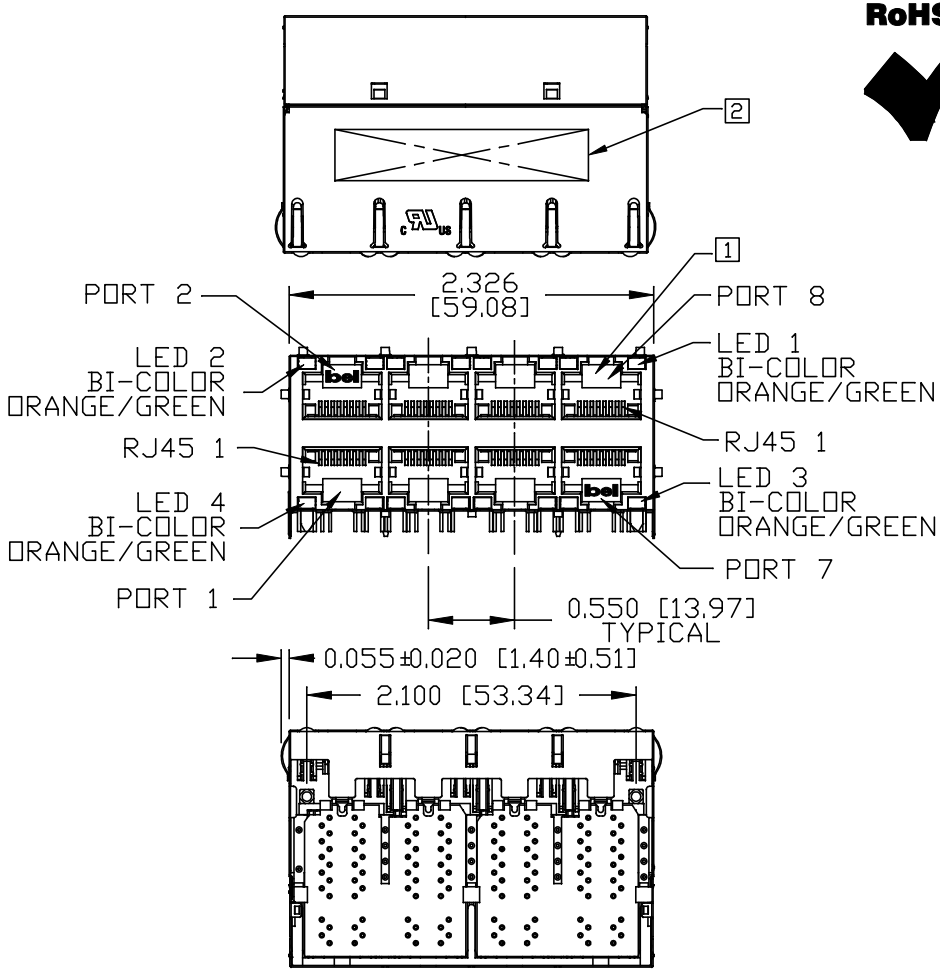

NOTES:

PLASTIC HOUSING: THERMOPLASTIC PBT
FLAMMABILITY RATING UL 94V-0

CONTACT PLATING: 50 MICRO-INCH HARD GOLD PLATING OR EQUIVALENT.

OUTPUT PINS: TIN-COATED COPPER WIRE, DIA 0.018 INCH.

METAL SHIELD: NICKEL PLATED ON COPPER ALLOY.
(ALL GROUND LEADS ARE SOLDER DIPPED)

1. JACK CAVITY CONFORMS TO FCC RULES AND REGULATIONS, PART 68 SUBPART F.
2. MARK PART WITH MFG LOGO, PART NUMBER, DATE CODE, MFG NAME AND PATENTED.
3. THE PRODUCT IS RoHS COMPLIANT.
c UL us UL RECOGNIZED - FILE #E196366 AND E169987.
4. THE PRODUCT IS PATENTED. THE PATENT NUMBER ARE U.S. PAT. 6,840,817 AND U.S. PAT. 7,123,117.

REV. :	PA
PAGE :	3

ORIGINATED BY ANTON LIAO DATE 2015-10-16	TITLE 2X4 2.5 gigabit MagJack® 4PPoE PATENTED	PART NO. / DRAWING NO. 0895-2B4J-JD	STANDARD DIM. TOL. IN INCH [ ] METRIC DIM. AS REF.
DRAWN BY JESSE LI DATE 2015-10-16		FILE NAME 0895-2B4J-JD_PA.DWG	.X ; UNIT : INCH [mm] .XX ; SCALE : N/A .XXX ±0.010 ; SIZE : A4

bel MAGNETIC SOLUTIONS
a bel group

This document is electronically generated. This is a controlled copy if used internally

THE INFORMATION CONTAINED HEREIN IS CONSIDERED 'PROPRIETARY' TO BEL FUSE INC. AND SHALL NOT BE COPIED, REPRODUCED OR DISCLOSED WITHOUT THE WRITTEN APPROVAL OF BEL FUSE INC.

PRELIMINARY

RoHS

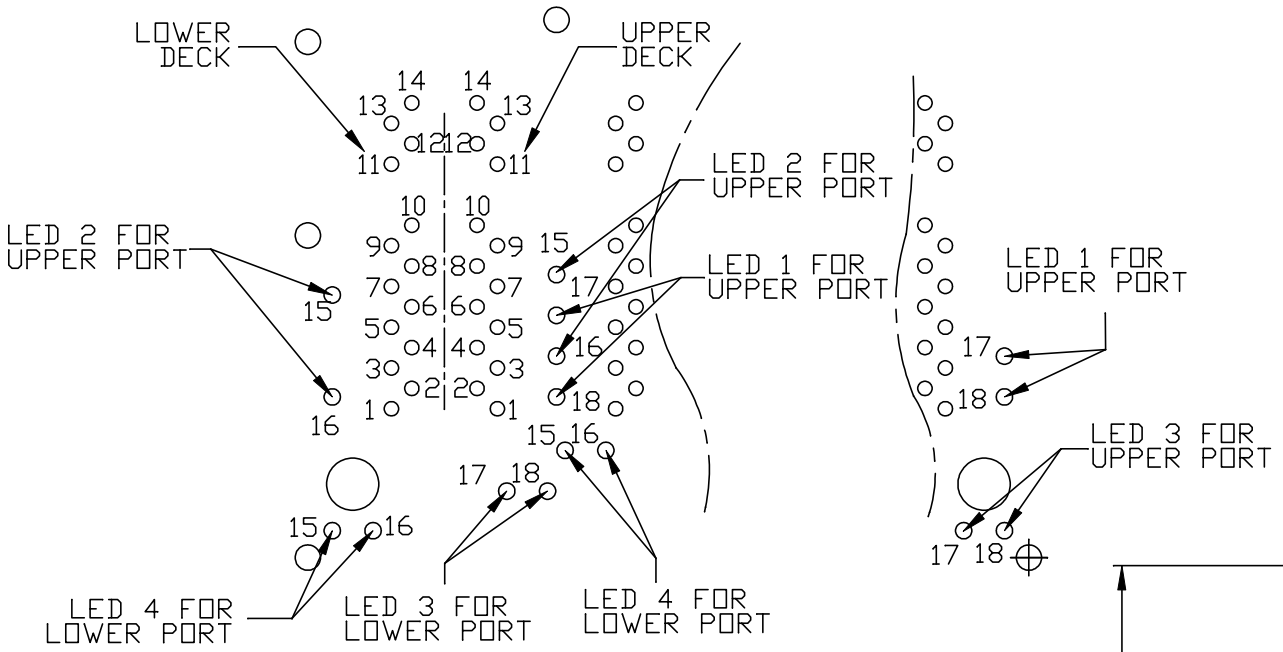

PORT ASSIGNMENT
(COMPONENT SIDE VIEW)

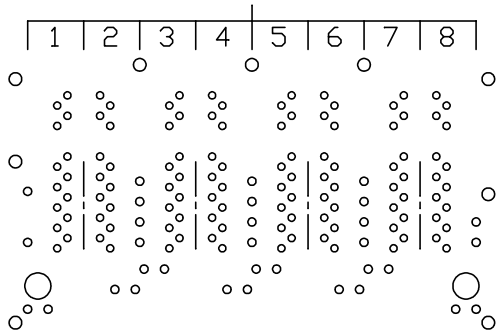

PIN-OUT INFORMATION
(COMPONENT SIDE VIEW)

10	GND		
9	TRDCT1/2/3/4		
8	TRD 4+	18	ORANGE (+)/GREEN (-)
7	TRD 4-	17	ORANGE (-)/GREEN (+)
6	TRD 3+	16	ORANGE (+)/GREEN (-)
5	TRD 3-	15	ORANGE (-)/GREEN (+)
4	TRD 2+	14	VC36
3	TRD 2-	13	VC78
2	TRD 1+	12	VC45
1	TRD 1-	11	VC12

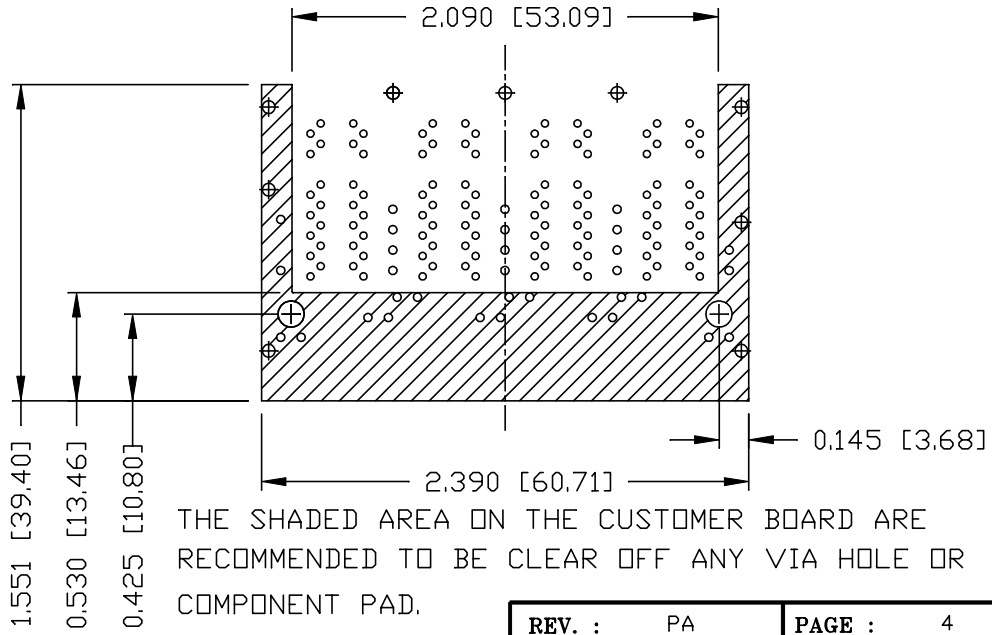

THE SHADED AREA ON THE CUSTOMER BOARD ARE RECOMMENDED TO BE CLEAR OFF ANY VIA HOLE OR COMPONENT PAD.

ORIGINATED BY ANTON LIAO DATE 2015-10-16	TITLE 2X4 2.5 gigabit MagJack® 4PPoE PATENTED	PART NO. / DRAWING NO. 0895-2B4J-JD	REV. : PA
DRAWN BY JESSE LI DATE 2015-10-16		FILE NAME 0895-2B4J-JD_PA.DWG	PAGE : 4

STANDARD DIM. TOL. IN INCH		[ ] METRIC DIM. AS REF.
.X		UNIT : INCH [mm]
.XX		SCALE : N/A
.XXX	±0.004	SIZE : A4

bel MAGNETIC SOLUTIONS
a bel group

This document is electronically generated. This is a controlled copy if used internally

THE INFORMATION CONTAINED HEREIN IS CONSIDERED "PROPRIETARY" TO BEL FUSE INC. AND SHALL NOT BE COPIED, REPRODUCED OR DISCLOSED WITHOUT THE WRITTEN APPROVAL OF BEL FUSE INC.

PRELIMINARY

RoHS

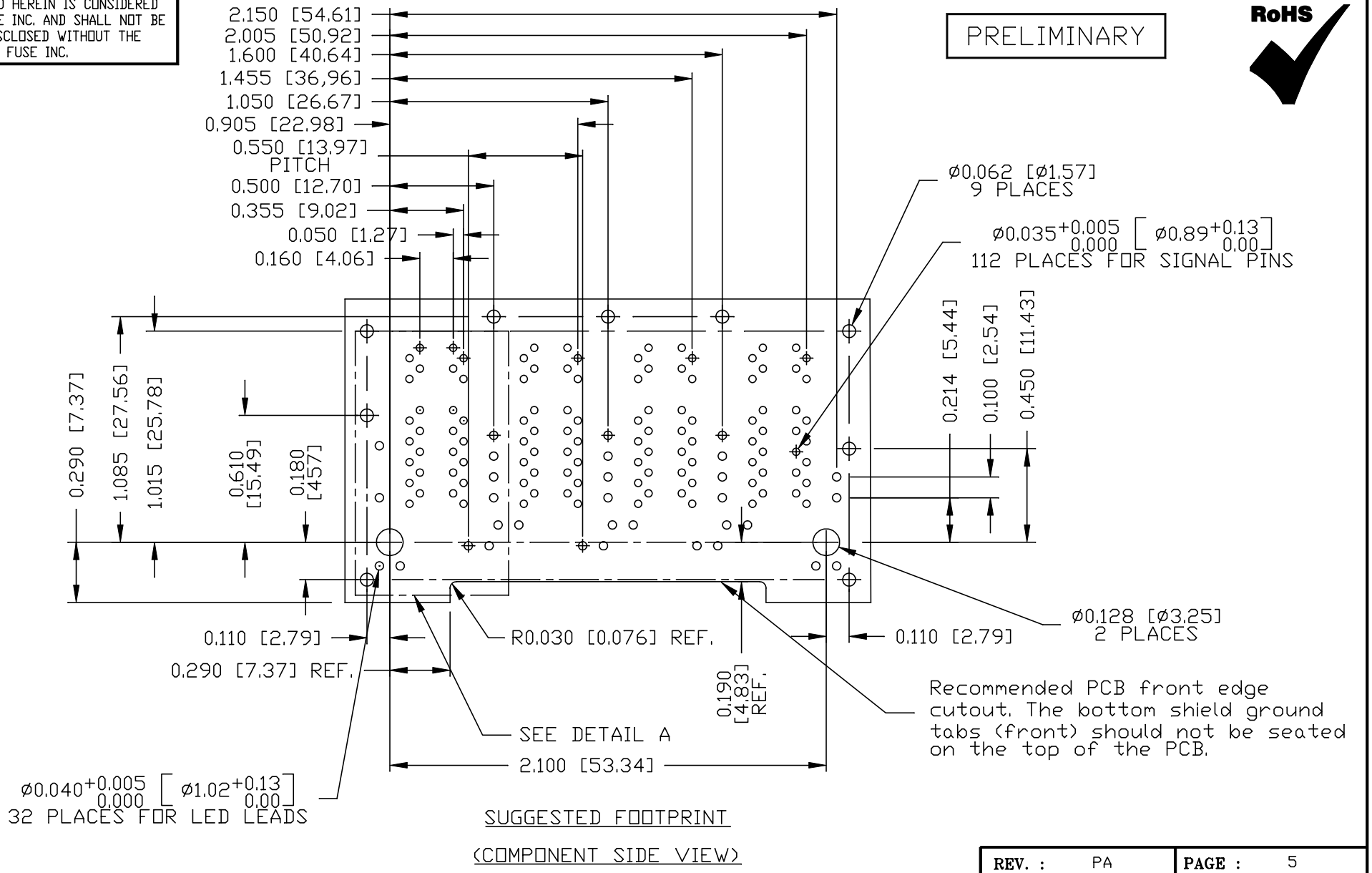

SUGGESTED FOOTPRINT

(COMPONENT SIDE VIEW)

ORIGINATED BY ANTON LIAO DATE 2015-10-16	TITLE 2X4 2.5 gigabit MagJack® 4PPoE PATENTED	PART NO. / DRAWING NO. 0895-2B4J-JD	STANDARD DIM. TOL. IN INCH	[ ] METRIC DIM. AS REF.	REV. : PA
DRAWN BY JESSE LI DATE 2015-10-16		FILE NAME 0895-2B4J-JD_PA.DWG	.X / .XX / .XXX ±0.004	UNIT : INCH [mm] SCALE : N/A SIZE : A4	PAGE : 5

bel MAGNETIC SOLUTIONS
a bel group

This document is electronically generated. This is a controlled copy if used internally

THE INFORMATION CONTAINED HEREIN IS CONSIDERED "PROPRIETARY" TO BEL FUSE INC. AND SHALL NOT BE COPIED, REPRODUCED OR DISCLOSED WITHOUT THE WRITTEN APPROVAL OF BEL FUSE INC.

PRELIMINARY

RoHS

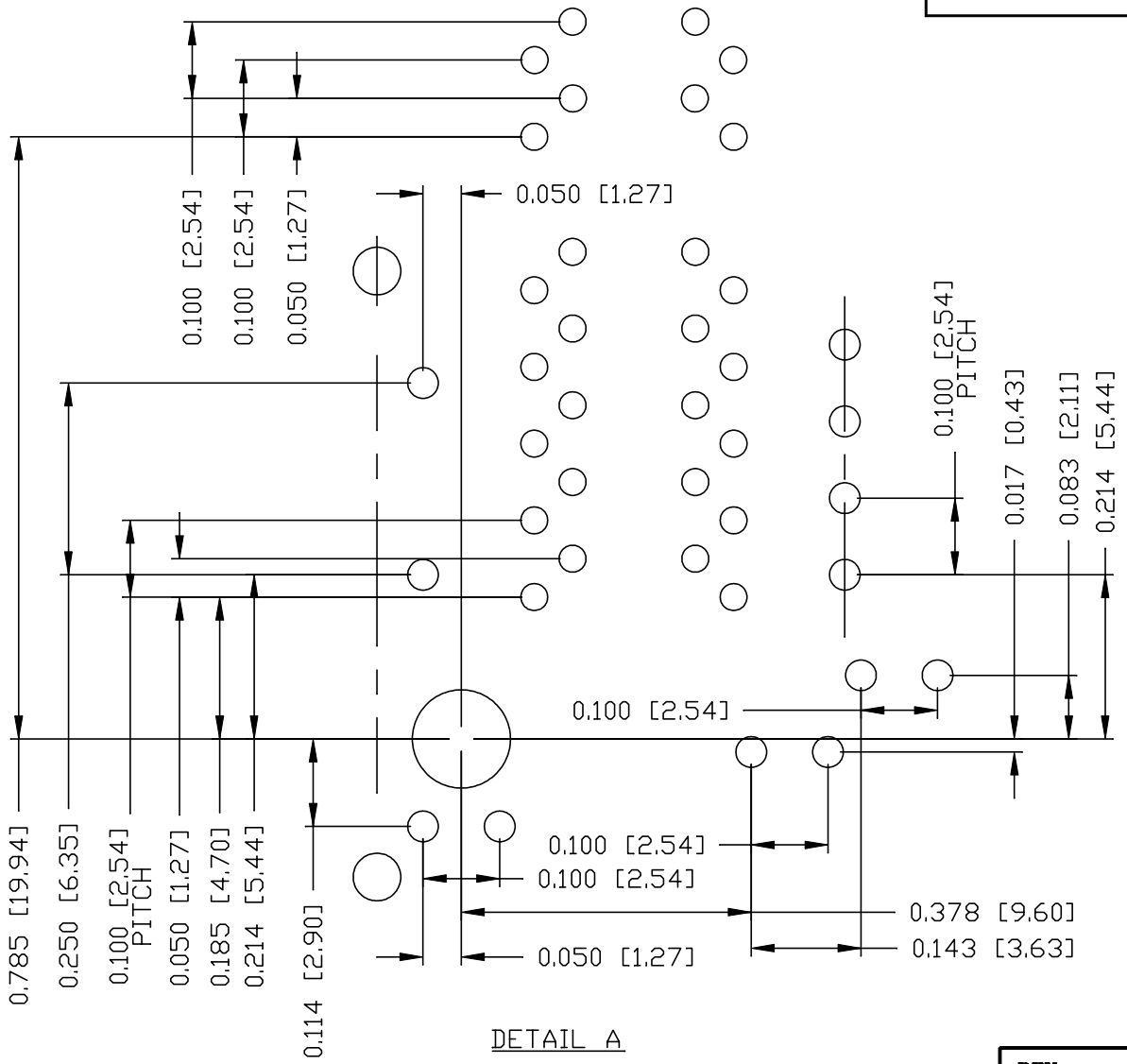

DETAIL A

ORIGINATED BY ANTON LIAO DATE 2015-10-16	TITLE 2X4 2.5 gigabit MagJack® 4PPoE PATENTED	PART NO. / DRAWING NO. 0895-2B4J-JD	STANDARD DIM. TOL. IN INCH	[ ] METRIC DIM. AS REF.	REV. : PA / PAGE : 6
DRAWN BY JESSE LI DATE 2015-10-16		FILE NAME 0895-2B4J-JD_PA.DWG	.X / .XX / .XXX ±0.004	UNIT : INCH [mm] SCALE : N/A SIZE : A4	bel MAGNETIC SOLUTIONS a bel group

This document is electronically generated. This is a controlled copy if used internally

THE INFORMATION CONTAINED HEREIN IS CONSIDERED "PROPRIETARY" TO BEL FUSE INC. AND SHALL NOT BE COPIED, REPRODUCED OR DISCLOSED WITHOUT THE WRITTEN APPROVAL OF BEL FUSE INC.

PRELIMINARY

RoHS

SUGGESTED PANEL OPENING

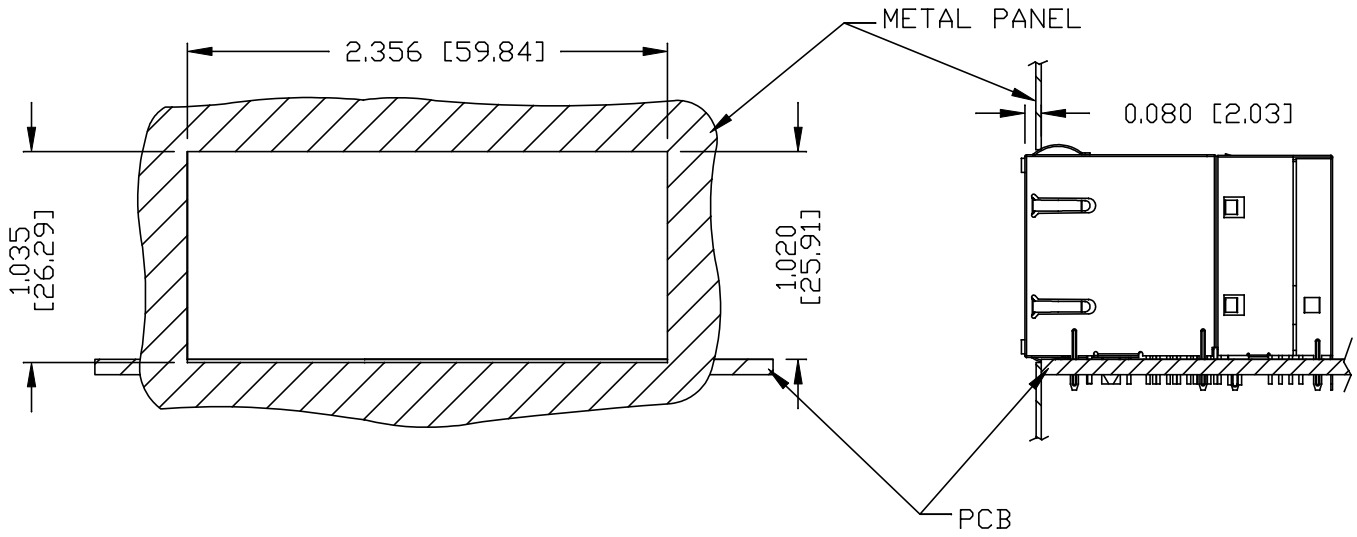

NOTE:

THE DISTANCE OF PANEL INSIDE SURFACE RELATIVE TO FRONT SURFACE OF PART IS ONLY A SUGGESTION. IN CASE THIS DISTANCE IS DIFFERENT, THE REQUIRED PANEL OPENING DIMENSIONS CHANGE ACCORDINGLY.

PACKING INFORMATION

PACKING TRAY : 0200-9999-G2 (TOP)
0200-9999-G3 (BOTTOM)

PACKING QUANTITY : 20 PCS FINISHED GOODS PER TRAY
5 TRAYS (100 PCS FINISHED GOODS) PER CARTON BOX

NOTE : CARDBOARDS ARE PLACED BETWEEN LAYERS OF PACKING TRAY INSIDE CARTON BOX (INCLUDE THE UPPERMOST AND LOWERMOST TRAY)

ORIGINATED BY ANTON LIAO DATE 2015-10-16	TITLE 2X4 2.5 gigabit MagJack® 4PPoE PATENTED	PART NO. / DRAWING NO. 0895-2B4J-JD	STANDARD DIM. TOL. IN INCH	[ ] METRIC DIM. AS REF.	REV. : PA / PAGE : 7
DRAWN BY JESSE LI DATE 2015-10-16		FILE NAME 0895-2B4J-JD_PA.DWG	.X .XX .XXX ±0.004	UNIT : INCH [mm] SCALE : N/A SIZE : A4	bel MAGNETIC SOLUTIONS a bel group

This document is electronically generated. This is a controlled copy if used internally