THE INFORMATION CONTAINED HEREIN IS CONSIDERED "PROPRIETARY" TO BEL FUSE INC. AND SHALL NOT BE COPIED, REPRODUCED OR DISCLOSED WITHOUT THE WRITTEN APPROVAL OF BEL FUSE INC.

PRELIMINARY

RoHS 2002/95/EC

LED 2 & 4 POLARITY			LED 1 & 3 POLARITY		
PIN 11	PIN 12	COLOR	PIN 13	PIN 14	COLOR
+	−	GREEN	+	−	GREEN

ELECTRICAL CHARACTERISTICS @ 25°C

TURNS RATIO	1CT : 1CT ±2%
OCL @ 100mV, 100KHz	
8mA DC BIAS	350µH MIN.
INSERTION LOSS	
100KHz TO 100MHz	-1.5 dB MAX.
RETURN LOSS (MIN.)	
2MHz-30MHz	-16 dB MIN.
60MHz-80MHz	-10 dB MIN.
LEAKAGE INDUCTANCE	
PRIMARY W/ SECONDARY SHORTED	0.25 uH MAX. @ 1MHz
D.C. RESISTANCE	
(9-8)=(7-6)	1.4 OHM.
(RJ1-RJ2)=(RJ3-RJ6)	1.0 OHM.
INTERWINDING CAPACITANCE	
PER CHANNEL (PRI. to SEC.)	40 pF MAX.
XTALK	
100KHz TO 100MHz	-30 dB MIN.
HIPOT (Isolation Voltage):	2250 VDC

100% OF PRODUCTION TESTED TO COMPLY WITH IEEE 802.3 ISOLATION REQUIREMENTS.

BALANCED DC LINE CURRENT 720 mA MAX. @ 57 VDC CONTINUOUS
1.2 A MAX. @ 57 VDC for 200 MILLISECONDS

LEDS 1, 2, 3 AND 4

VF (FORWARD VOLTAGE)	IF=20mA	GREEN	2.2V TYP.
λD (DOMINANT WAVELENGTH)	IF=20mA	GREEN	565nm TYP.

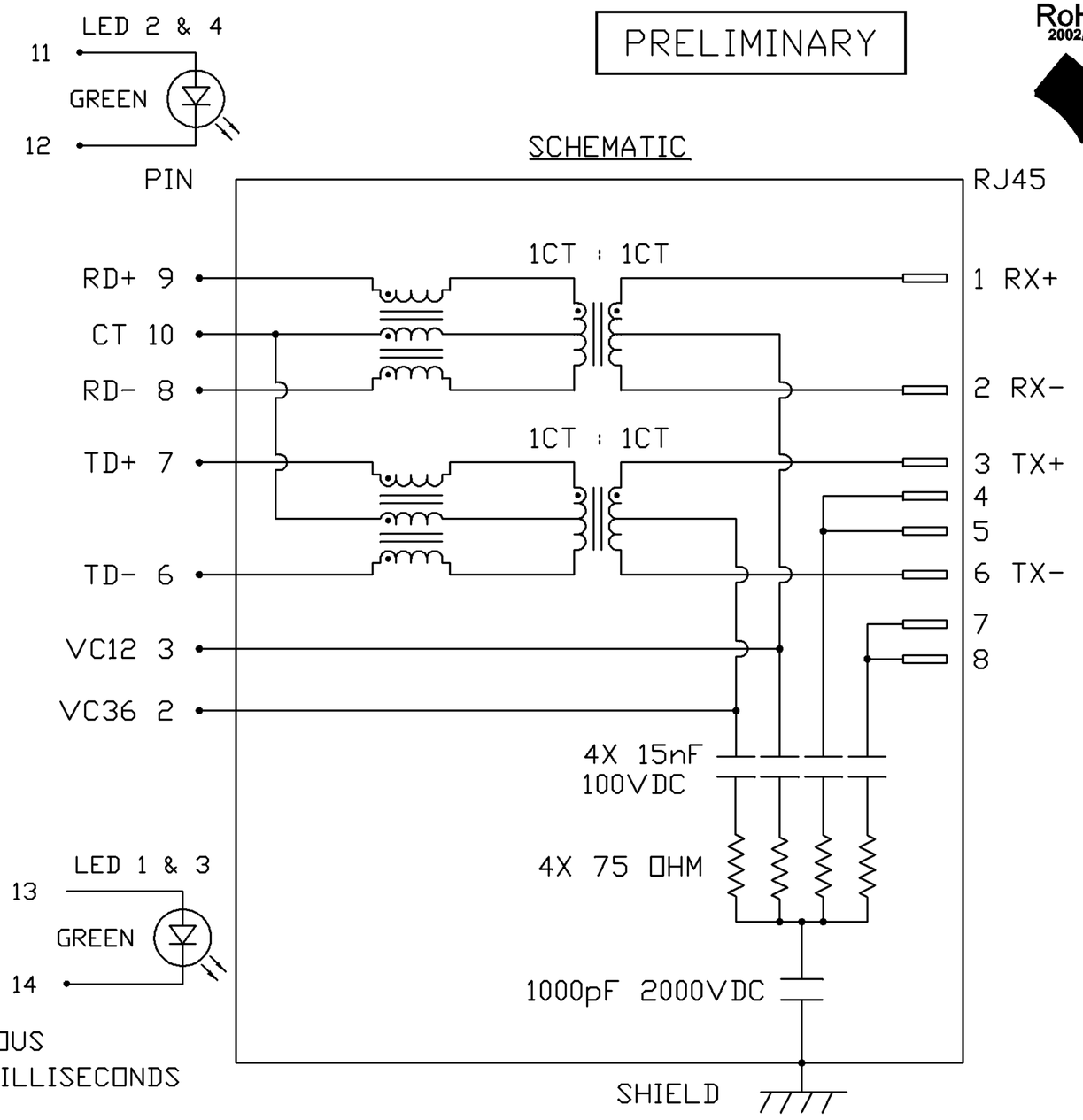

ORIGINATED BY	DATE	TITLE	PART NO. / DRAWING NO.	STANDARD DIM. TOL. IN INCH	[ ] METRIC DIM. AS REFERENCE	
CHOW WANCHUNG	12-01-08	10/100 MagJack® (PoEp)	0879-2G8R-BU	.X	UNIT : INCH [mm]	REV. : PC
DRAWN BY	DATE		FILE NAME	.XX	SCALE : N/A	SIZE : A4
LEE WEIDE	12-01-08		0879-2G8R-BU_PC.DWG	.XXX		PAGE : 2

bel COMPONENTS FOR A CONNECTED PLANET

This document is electronically generated. This is a controlled copy if used internally

Please read our datasheet & drawing disclaimer here.

THE INFORMATION CONTAINED HEREIN IS CONSIDERED "PROPRIETARY" TO BEL FUSE INC. AND SHALL NOT BE COPIED, REPRODUCED OR DISCLOSED WITHOUT THE WRITTEN APPROVAL OF BEL FUSE INC.

PRELIMINARY

RoHS 2002/95/EC

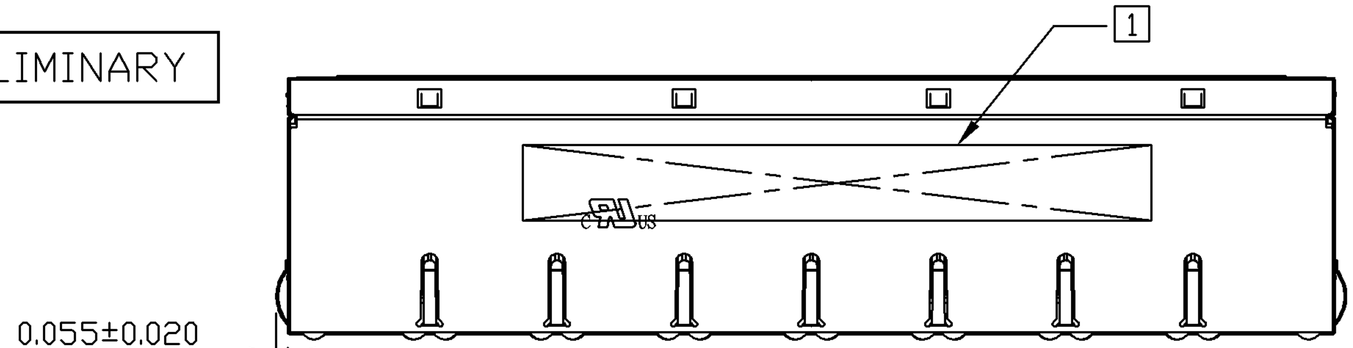

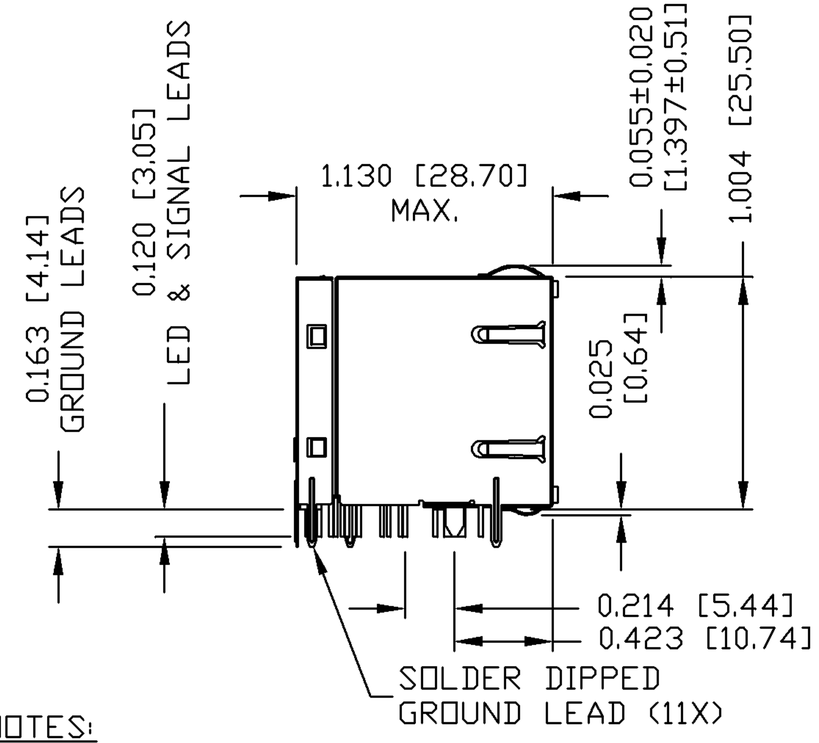

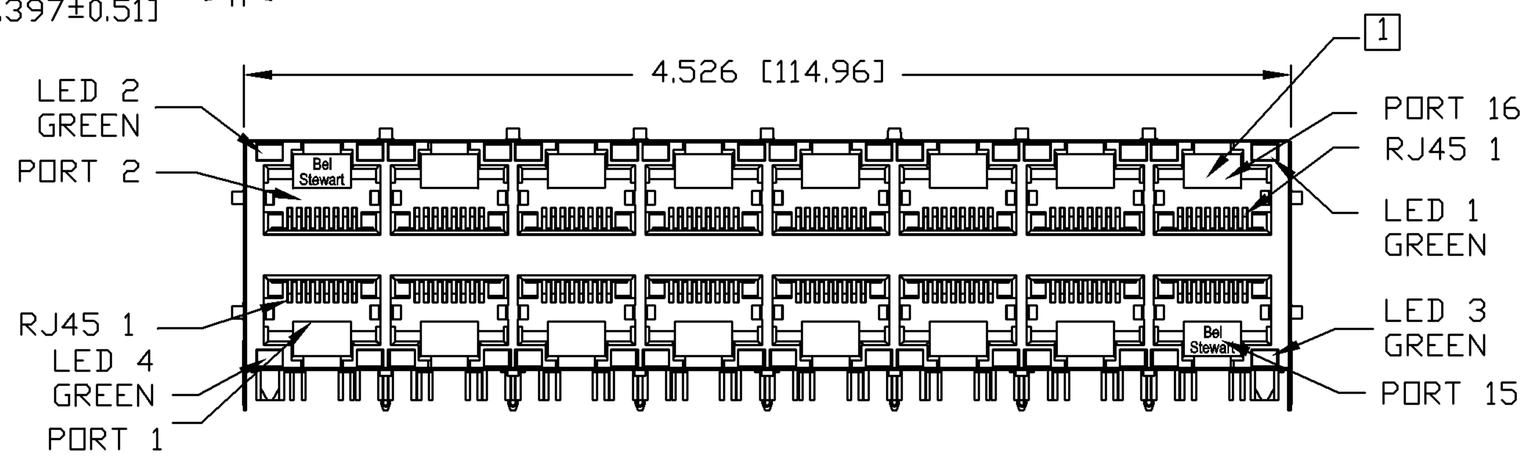

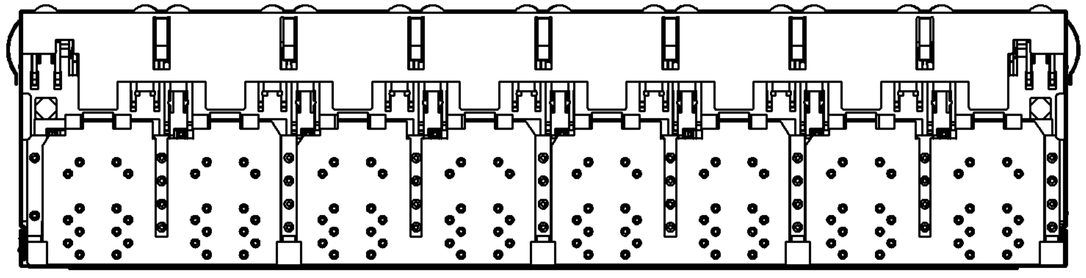

NOTES:

PLASTIC HOUSING:	THERMOPLASTIC PBT FLAMMABILITY RATING UL 94V-0
CONTACT PLATING:	50 MICRO-INCH HARD GOLD PLATING
OUTPUT PINS:	TIN-COATED COPPER WIRE, DIA 0.018 INCH.
METAL SHIELD:	NICKEL PLATED ON COPPER ALLOY. (ALL GROUND LEADS ARE SOLDER DIPPED)

1. JACK CAVITY CONFORMS TO FCC RULES AND REGULATIONS, PART 68 SUBPART F.
2. MARK PART WITH MFG LOGO, MFG NAME, PART NUMBER, AND DATE CODE.

c UL us UL RECOGNIZED - FILE #E196366 AND E169987.

ORIGINATED BY: ANTON LIAO	DATE: 12-01-08	TITLE: 10/100 MagJack® (PoEp)	PART NO. / DRAWING NO.: 0879-2G8R-BU	STANDARD DIM. TOL. IN INCH	[ ] METRIC DIM. AS REFERENCE
DRAWN BY: SANDY LIN	DATE: 12-01-08		FILE NAME: 0879-2G8R-BU_PC.DWG	.X / .XX / .XXX ±0.010	UNIT : INCH [mm] · REV. : PC SCALE : N/A · SIZE : A4 PAGE : 3

bel COMPONENTS FOR A CONNECTED PLANET

This document is electronically generated. This is a controlled copy if used internally

THE INFORMATION CONTAINED HEREIN IS CONSIDERED "PROPRIETARY" TO BEL FUSE INC. AND SHALL NOT BE COPIED, REPRODUCED OR DISCLOSED WITHOUT THE WRITTEN APPROVAL OF BEL FUSE INC.

PRELIMINARY

RoHS 2002/95/EC

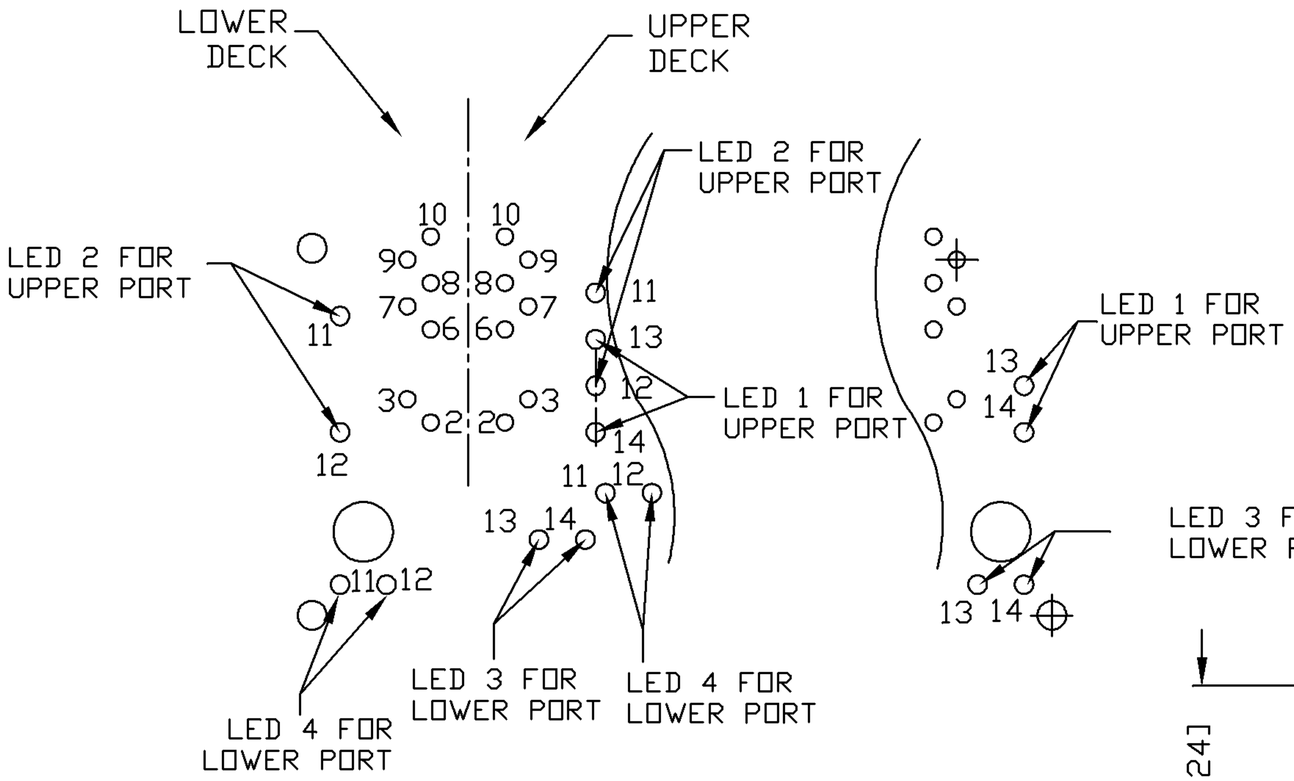

PIN-OUT INFORMATION
(COMPONENT SIDE VIEW)

10	COMMON CT		
9	RD+		
8	RD-		
7	TD+		
6	TD-		
5	NO PIN		
4	NO PIN	14	GREEN (-)
3	Vc12	13	GREEN (+)
2	Vc36	12	GREEN (-)
1	NO PIN	11	GREEN (+)

PORT ASSIGNMENT
(COMPONENT SIDE VIEW)

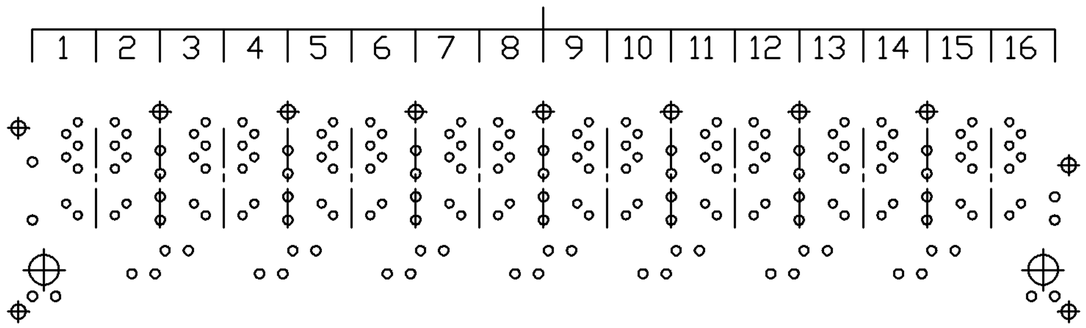

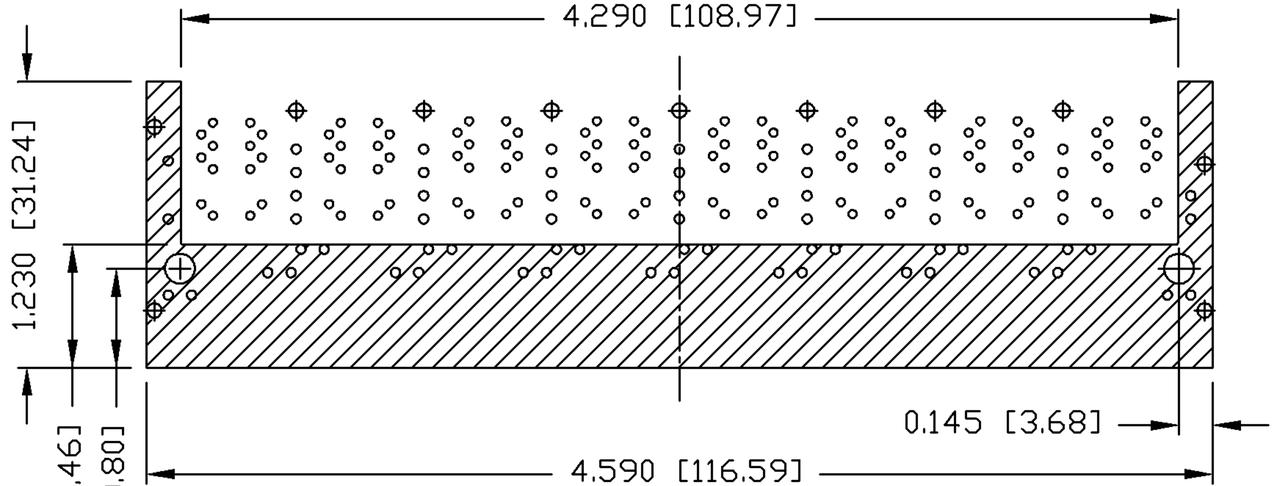

NOTES:

THE SHADED AREA ON THE CUSTOMER BOARD ARE RECOMMENDED TO BE CLEAR OFF ANY VIA HOLE OR COMPONENT PAD.

ORIGINATED BY: ANTON LIAO	DATE: 12-01-08	TITLE: 10/100 MagJack® (PoEp)	PART NO. / DRAWING NO.: 0879-2G8R-BU	STANDARD DIM. TOL. IN INCH: .X, .XX, .XXX ±0.004	[ ] METRIC DIM. AS REFERENCE
DRAWN BY: SANDY LIN	DATE: 12-01-08		FILE NAME: 0879-2G8R-BU_PC.DWG		UNIT : INCH [mm] / REV. : PC
					SCALE : N/A / SIZE : A4
					PAGE : 4

bel COMPONENTS FOR A CONNECTED PLANET

This document is electronically generated. This is a controlled copy if used internally

THE INFORMATION CONTAINED HEREIN IS CONSIDERED "PROPRIETARY" TO BEL FUSE INC. AND SHALL NOT BE COPIED, REPRODUCED OR DISCLOSED WITHOUT THE WRITTEN APPROVAL OF BEL FUSE INC.

PRELIMINARY

RoHS 2002/95/EC

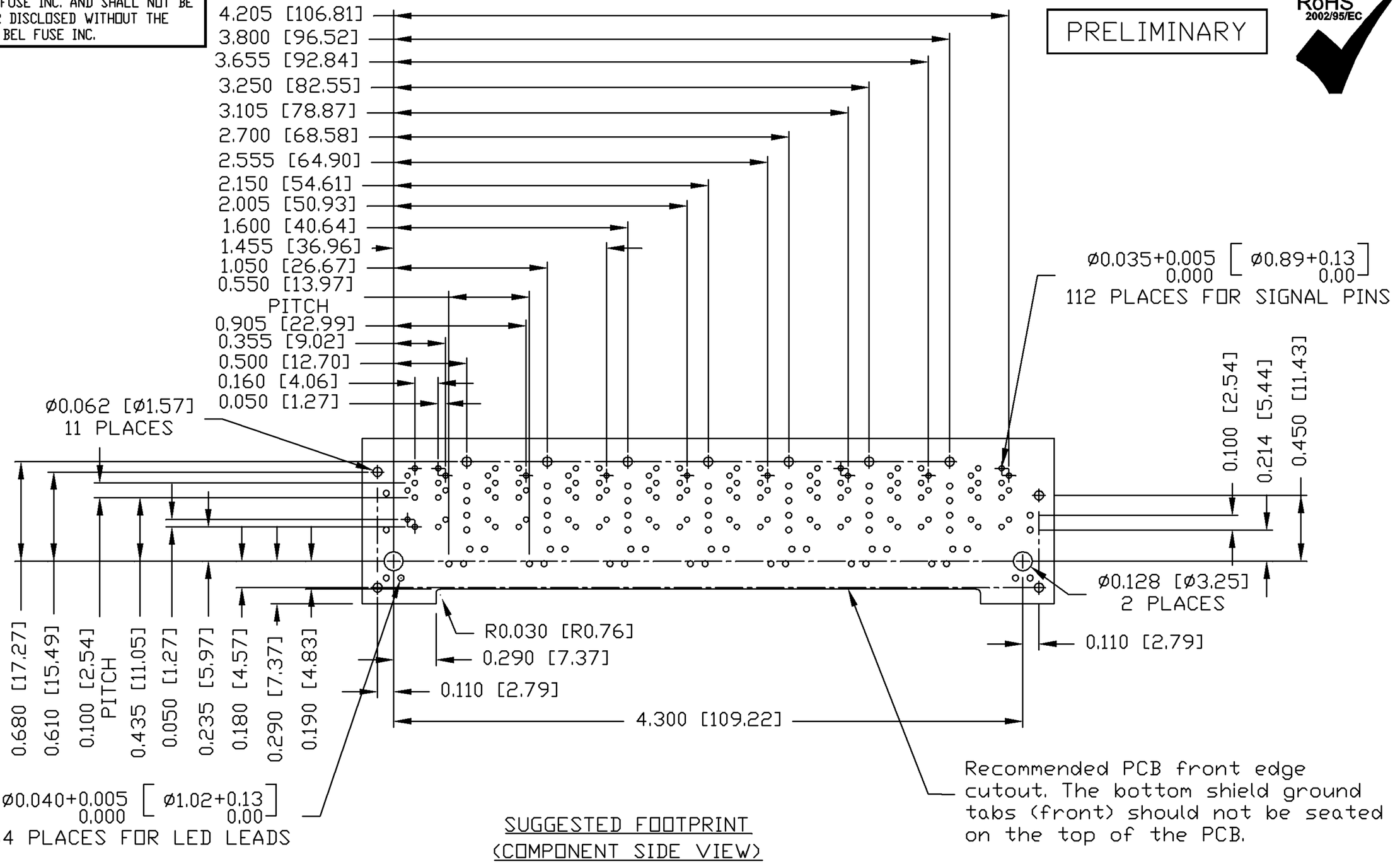

SUGGESTED FOOTPRINT
(COMPONENT SIDE VIEW)

ORIGINATED BY: ANTON LIAO	DATE: 12-01-08	TITLE: 10/100 MagJack® (PoEp)	PART NO. / DRAWING NO.: 0879-2G8R-BU	STANDARD DIM. TOL. IN INCH: .X	[ ] METRIC DIM. AS REFERENCE
DRAWN BY: SANDY LIN	DATE: 12-01-08		FILE NAME: 0879-2G8R-BU_PC.DWG	.XX .XXX ±0.004	UNIT : INCH [mm] / REV. : PC SCALE : N/A / SIZE : A4 PAGE : 5

bel COMPONENTS FOR A CONNECTED PLANET

This document is electronically generated. This is a controlled copy if used internally

THE INFORMATION CONTAINED HEREIN IS CONSIDERED "PROPRIETARY" TO BEL FUSE INC. AND SHALL NOT BE COPIED, REPRODUCED OR DISCLOSED WITHOUT THE WRITTEN APPROVAL OF BEL FUSE INC.

PRELIMINARY

RoHS 2002/95/EC

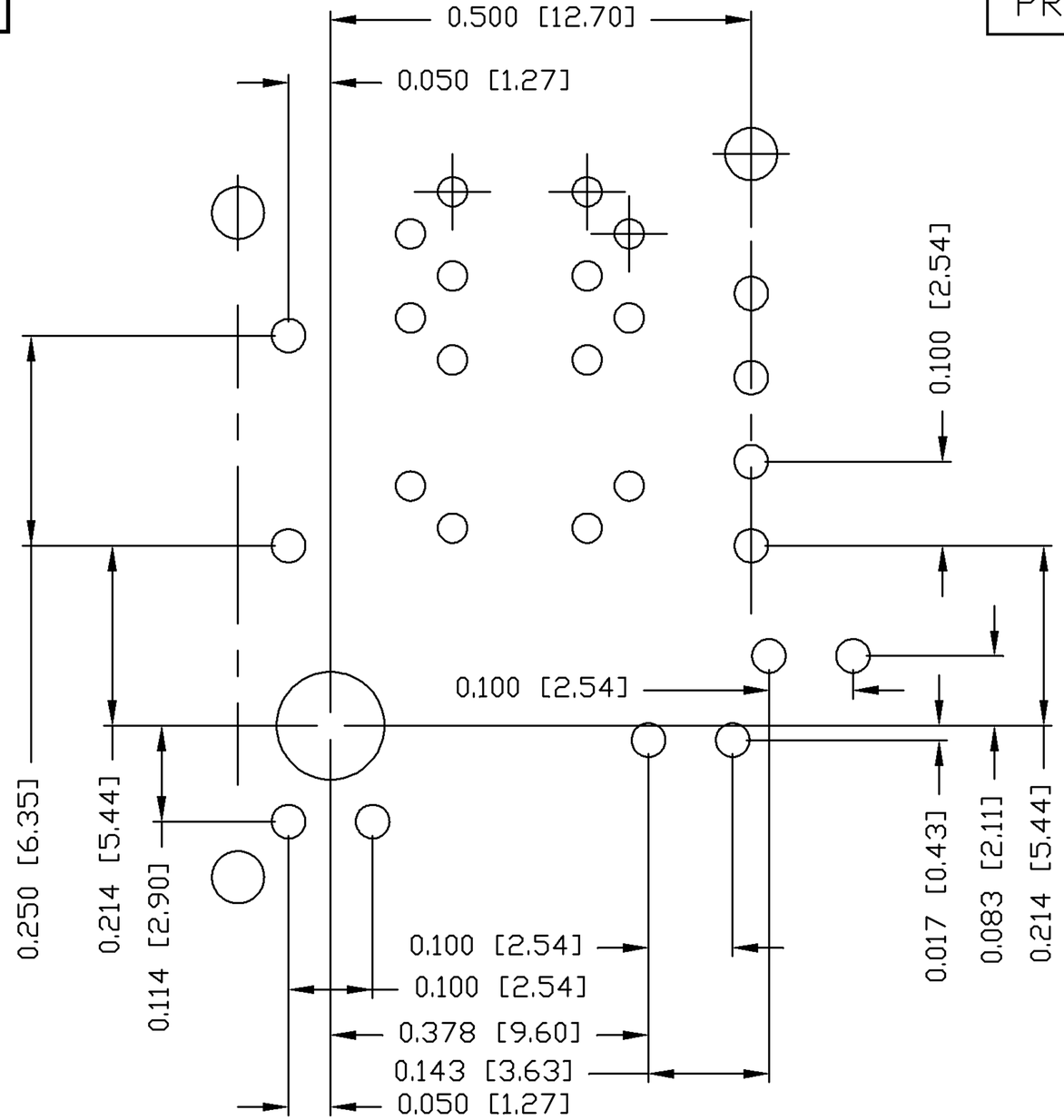

DETAIL A

ORIGINATED BY	DATE	TITLE	PART NO. / DRAWING NO.	STANDARD DIM. TOL. IN INCH		[ ] METRIC DIM. AS REFERENCE	
ANTON LIAO	12-01-08	10/100 MagJack® (PoEp)	0879-2G8R-BU	.X		UNIT : INCH [mm]	REV. : PC
DRAWN BY	DATE		FILE NAME	.XX		SCALE : N/A	SIZE : A4
SANDY LIN	12-01-08		0879-2G8R-BU_PC.DWG	.XXX	±0.004		PAGE : 6

bel COMPONENTS FOR A CONNECTED PLANET

This document is electronically generated. This is a controlled copy if used internally

THE INFORMATION CONTAINED HEREIN IS CONSIDERED "PROPRIETARY" TO BEL FUSE INC. AND SHALL NOT BE COPIED, REPRODUCED OR DISCLOSED WITHOUT THE WRITTEN APPROVAL OF BEL FUSE INC.

PRELIMINARY

RoHS 2002/95/EC

SUGGESTED PANEL OPENING

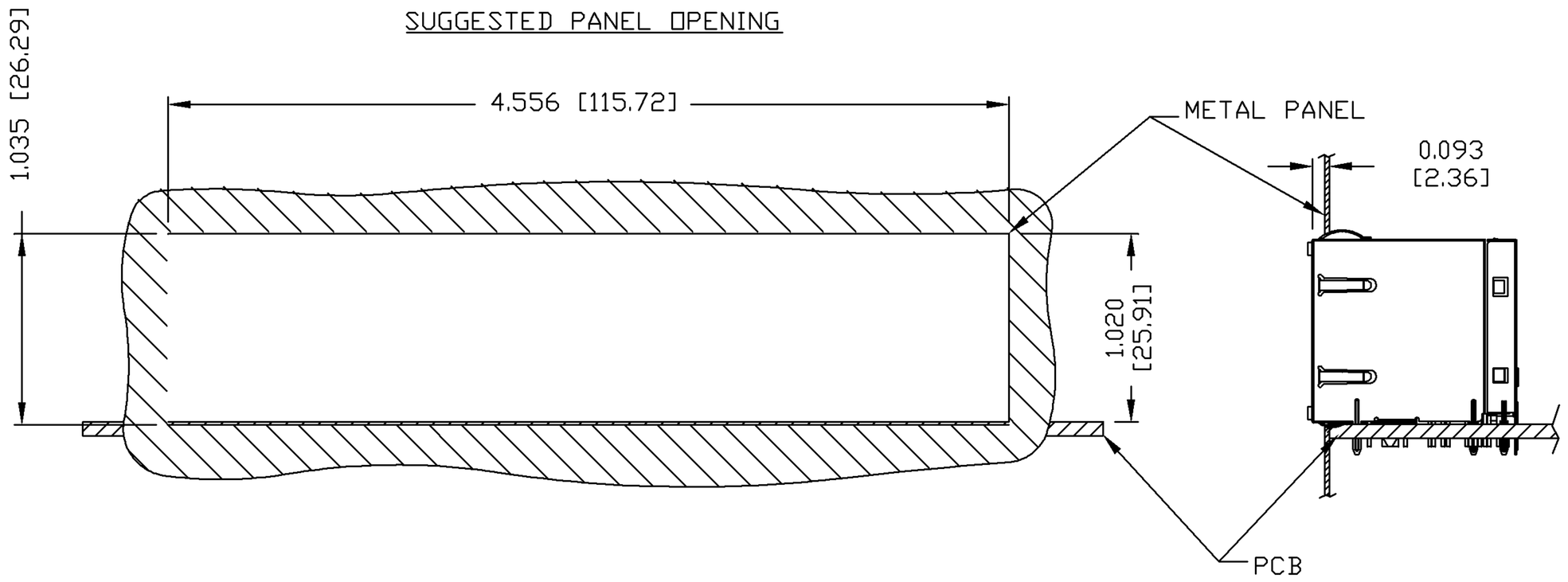

NOTE:

THE DISTANCE OF PANEL INSIDE SURFACE RELATIVE TO FRONT SURFACE OF PART IS ONLY A SUGGESTION.
IN CASE THIS DISTANCE IS DIFFERENT, THE REQUIRED PANEL OPENING DIMENSIONS CHANGE ACCORDINGLY.

PACKING INFORMATION

PACKING TRAY : 0200M9999-E2 (TOP)
0200M9999-E3 (BOTTOM)

PACKING QUANTITY : 10 PCS FINISHED GOODS PER TRAY
7 TRAYS (70 PCS FINISHED GOODS) PER CARTON BOX

NOTE : CARDBOARDS ARE PLACED BETWEEN LAYERS OF PACKING TRAY INSIDE CARTON BOX
(INCLUDE THE UPPERMOST AND LOWERMOST TRAY)

ORIGINATED BY	DATE	TITLE	PART NO. / DRAWING NO.	STANDARD DIM. TOL. IN INCH		[ ] METRIC DIM. AS REFERENCE	
ANTON LIAO	12-01-08	10/100 MagJack® (PoEp)	0879-2G8R-BU	.X		UNIT : INCH [mm]	REV. : PC
DRAWN BY	DATE		FILE NAME	.XX		SCALE : N/A	SIZE : A4
SANDY LIN	12-01-08		0879-2G8R-BU_PC.DWG	.XXX	±0.004		PAGE : 7

bel COMPONENTS FOR A CONNECTED PLANET

This document is electronically generated. This is a controlled copy if used internally