THE INFORMATION CONTAINED HEREIN IS CONSIDERED "PROPRIETARY" TO BEL FUSE INC. AND SHALL NOT BE COPIED, REPRODUCED OR DISCLOSED WITHOUT THE WRITTEN APPROVAL OF BEL FUSE INC.

LED 2 & 4 POLARITY			LED 1 & 3 POLARITY		
PIN 7	PIN 8	COLOR	PIN 9	PIN 10	COLOR
+	-	YELLOW	+	-	GREEN

PRELIMINARY

RoHS 2002/95/EC

ELECTRICAL CHARACTERISTICS @ 25°C

TURNS RATIO
- TP1 — 1CT : 1CT ±2%
- TP2 — 1CT : 1CT ±2%

OCL @ 100kHz/100mVRMS — 350µH MIN.
- 8mA DC BIAS (0°C - 70°C)

INS. LOSS
- 0.1MHz TO 1MHz — -1.1 dB MAX
- 1MHz TO 65MHz — -0.5 dB MAX
- 65MHz TO 100MHz — -1.0 dB MAX

RET. LOSS (MIN) @ 100OHMS ±15%
- 0.5MHz-40MHz — -18 dB
- 40MHz-80MHz — -12+20LOG(f/80MHz) dB

CM TO CM REJ
- 100kHz - 100MHz — -30 dB MIN

CM TO DM REJ
- 100kHz - 100MHz — -35 dB MIN

CROSS TALK (TX - RX)
- 100kHz - 100MHz — -35 dB MIN

OPERATING TEMPERATURE: — -40° TO +85°C

HIPOT (Isolation Voltage): — 1500 Vrms
- 100% OF PRODUCTION TESTED TO COMPLY WITH IEEE 802.3 ISOLATION REQUIREMENTS

LED 2 & 4
- VF (FORWARD VOLTAGE) — IF=20mA YELLOW 2.1V TYP.
- λD (DOMINANT WAVELENGTH) — IF=20mA YELLOW 590nm TYP.

LED 1 & 3
- VF (FORWARD VOLTAGE) — IF=20mA GREEN 2.2V TYP.
- λD (DOMINANT WAVELENGTH) — IF=20mA GREEN 565nm TYP.

SCHEMATIC

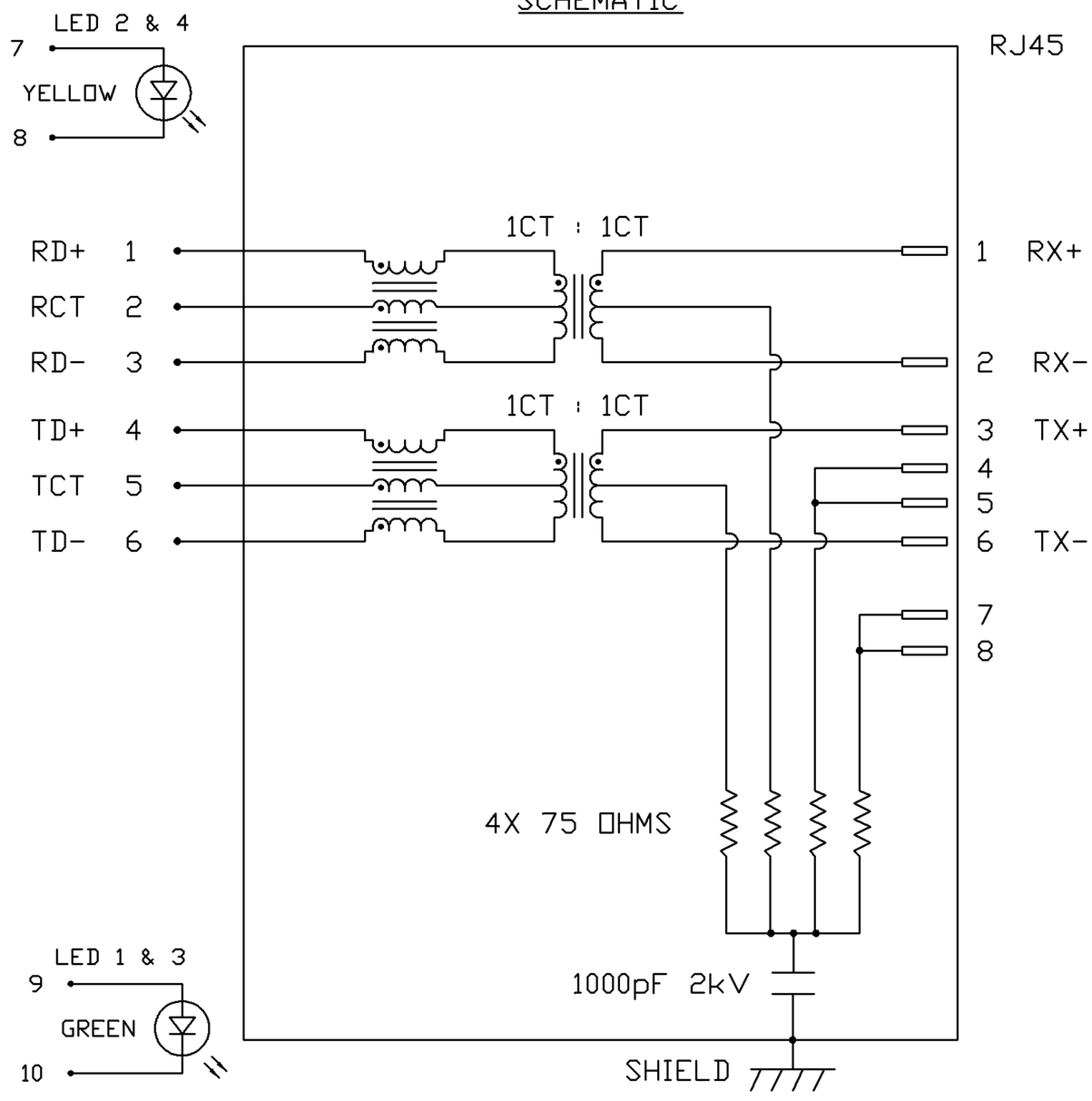

ORIGINATED BY	DATE	TITLE	PART NO. / DRAWING NO.	STANDARD DIM. TOL. IN INCH	[ ] METRIC DIM. AS REFERENCE	
CHOW WANCHUNG	11-28-08	2X4 MagJack® FOR 10/100 WITH UPPER AND LOWER LED (EXT. TEMP.)	0879-2D4R-BV	.X	UNIT : INCH [mm]	REV. : PC
DRAWN BY	DATE		FILE NAME	.XX	SCALE : N/A	SIZE : A4
WEIDE LEE	11-28-08		0879-2D4R-BV_PC.DWG	.XXX		PAGE : 2

bel — COMPONENTS FOR A CONNECTED PLANET

This document is electronically generated. This is a controlled copy if used internally

Please read our datasheet & drawing disclaimer here.

THE INFORMATION CONTAINED HEREIN IS CONSIDERED "PROPRIETARY" TO BEL FUSE INC. AND SHALL NOT BE COPIED, REPRODUCED OR DISCLOSED WITHOUT THE WRITTEN APPROVAL OF BEL FUSE INC.

PRELIMINARY

RoHS 2002/95/EC

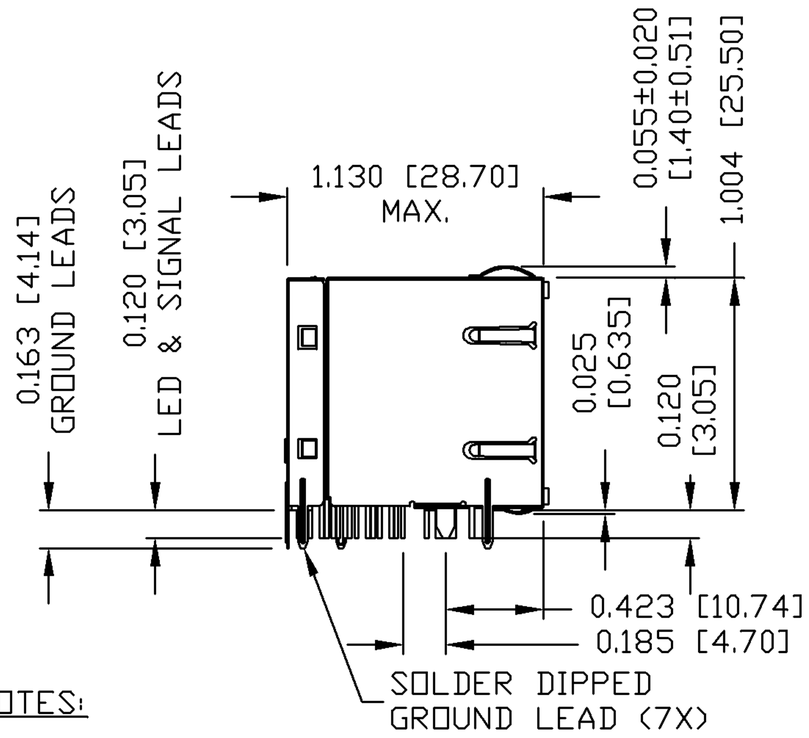

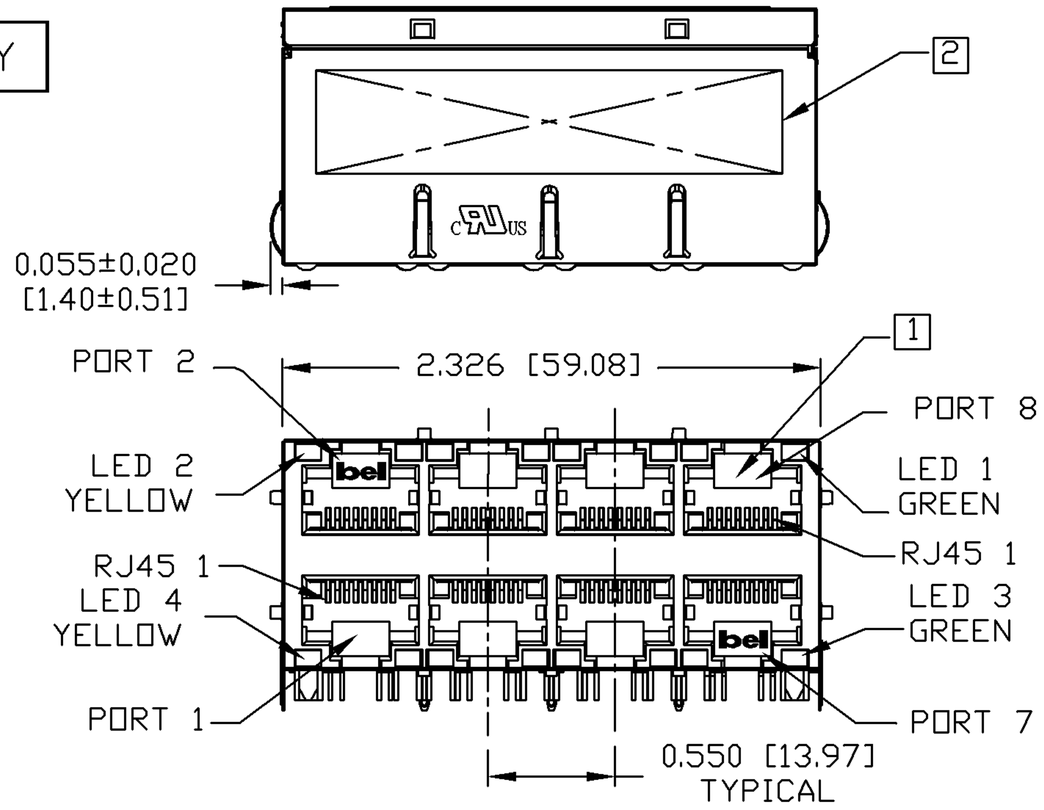

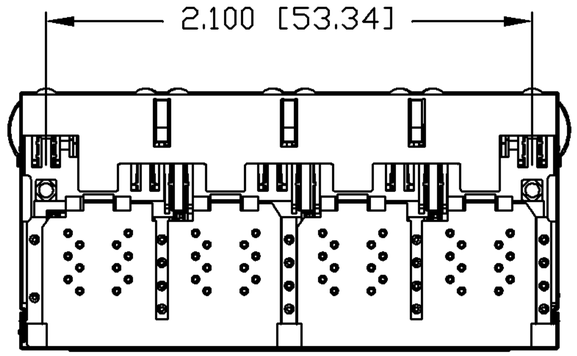

NOTES:

PLASTIC HOUSING:	THERMOPLASTIC PBT FLAMMABILITY RATING UL 94V-0
CONTACT PLATING:	50 MICRO-INCH HARD GOLD PLATING
OUTPUT PINS:	TIN-COATED COPPER WIRE, DIA 0.018 INCH.
METAL SHIELD:	NICKEL PLATED ON COPPER ALLOY. (ALL GROUND LEADS ARE SOLDER DIPPED)

1. JACK CAVITY CONFORMS TO FCC RULES AND REGULATIONS, PART 68 SUBPART F.
2. MARK PART WITH MFG LOGO, MFG NAME, PART NUMBER, AND DATE CODE.
3. RoHS COMPLIANCE, PER EU DIRECTIVE 2002/95/EC.

c UL us UL RECOGNIZED - FILE #E196366 AND E169987.

ORIGINATED BY	DATE	TITLE	PART NO. / DRAWING NO.	STANDARD DIM. TOL. IN INCH		[ ] METRIC DIM. AS REFERENCE	
ANTON LIAO	11-28-08	2X4 MagJack® FOR 10/100 WITH UPPER AND LOWER LED (EXT. TEMP.)	0879-2D4R-BV	.X		UNIT : INCH [mm]	REV. : PC
DRAWN BY	DATE		FILE NAME	.XX		SCALE : N/A	SIZE : A4
SANDY LIN	11-28-08		0879-2D4R-BV_PC.DWG	.XXX	±0.010		PAGE : 3

bel COMPONENTS FOR A CONNECTED PLANET

This document is electronically generated. This is a controlled copy if used internally

THE INFORMATION CONTAINED HEREIN IS CONSIDERED "PROPRIETARY" TO BEL FUSE INC. AND SHALL NOT BE COPIED, REPRODUCED OR DISCLOSED WITHOUT THE WRITTEN APPROVAL OF BEL FUSE INC.

PRELIMINARY

RoHS 2002/95/EC

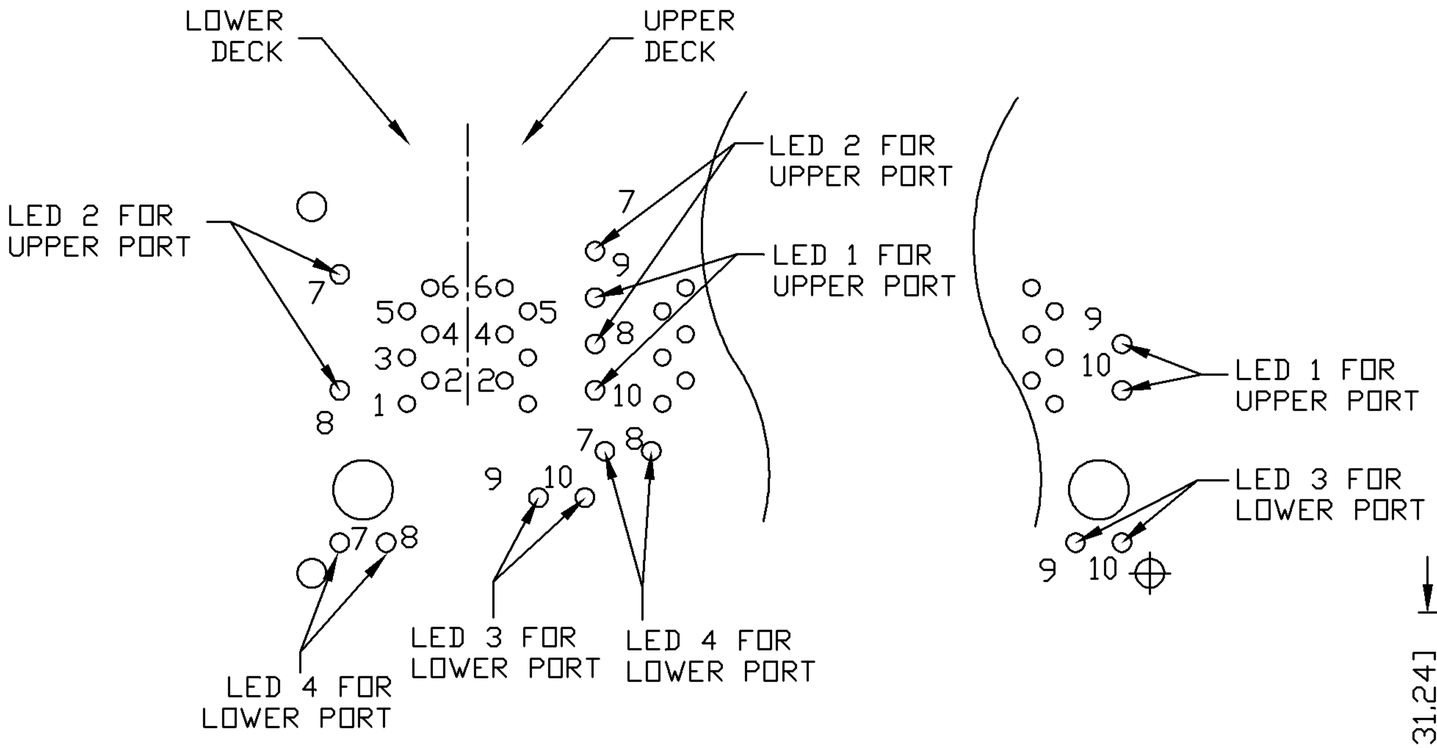

PIN-OUT INFORMATION
(COMPONENT SIDE VIEW)

10	GREEN -
9	GREEN +
8	YELLOW -
7	YELLOW +
6	TD-
5	TCT
4	TD+
3	RD-
2	RCT
1	RD+

PORT ASSIGNMENT
(COMPONENT SIDE VIEW)

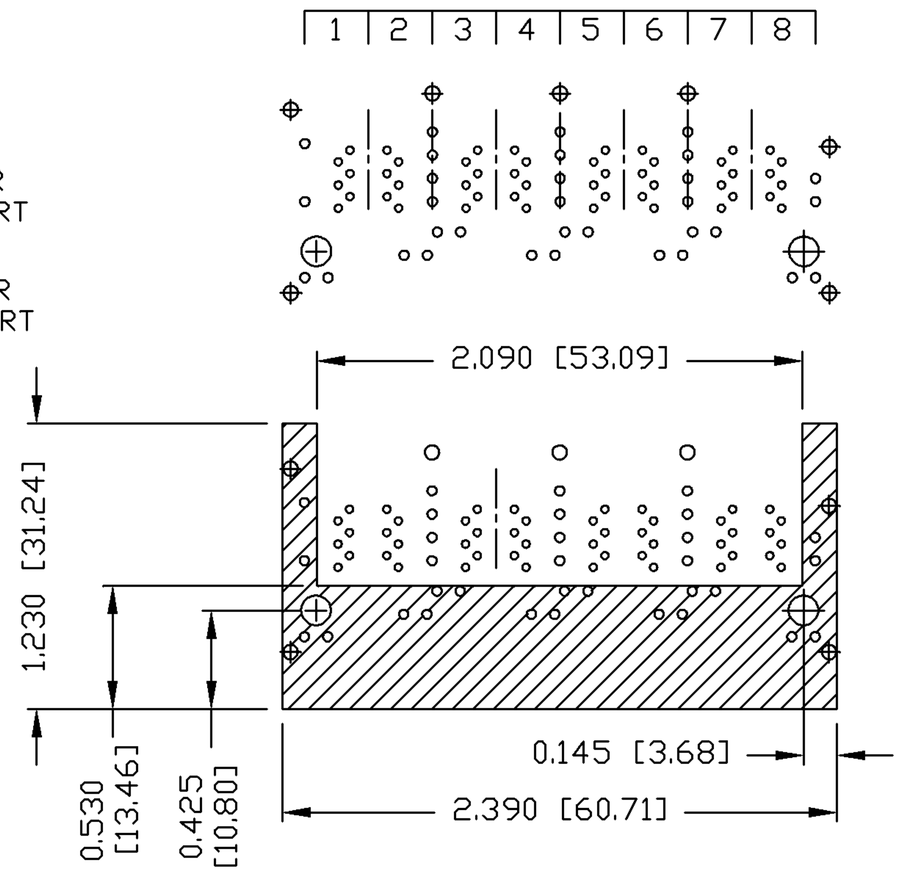

THE SHADED AREA ON THE CUSTOMER BOARD ARE RECOMMENDED TO BE CLEAR OFF ANY VIA HOLE OR COMPONENT PAD.

ORIGINATED BY: ANTON LIAO	DATE: 11-28-08	TITLE: 2X4 MagJack® FOR 10/100 WITH UPPER AND LOWER LED (EXT. TEMP.)	PART NO. / DRAWING NO.: 0879-2D4R-BV	STANDARD DIM. TOL. IN INCH: .X, .XX, .XXX ±0.004	[ ] METRIC DIM. AS REFERENCE
DRAWN BY: SANDY LIN	DATE: 11-28-08		FILE NAME: 0879-2D4R-BV_PC.DWG		UNIT : INCH [mm] / REV. : PC
					SCALE : N/A / SIZE : A4
					PAGE : 4

bel COMPONENTS FOR A CONNECTED PLANET

This document is electronically generated. This is a controlled copy if used internally

THE INFORMATION CONTAINED HEREIN IS CONSIDERED "PROPRIETARY" TO BEL FUSE INC. AND SHALL NOT BE COPIED, REPRODUCED OR DISCLOSED WITHOUT THE WRITTEN APPROVAL OF BEL FUSE INC.

PRELIMINARY

RoHS 2002/95/EC

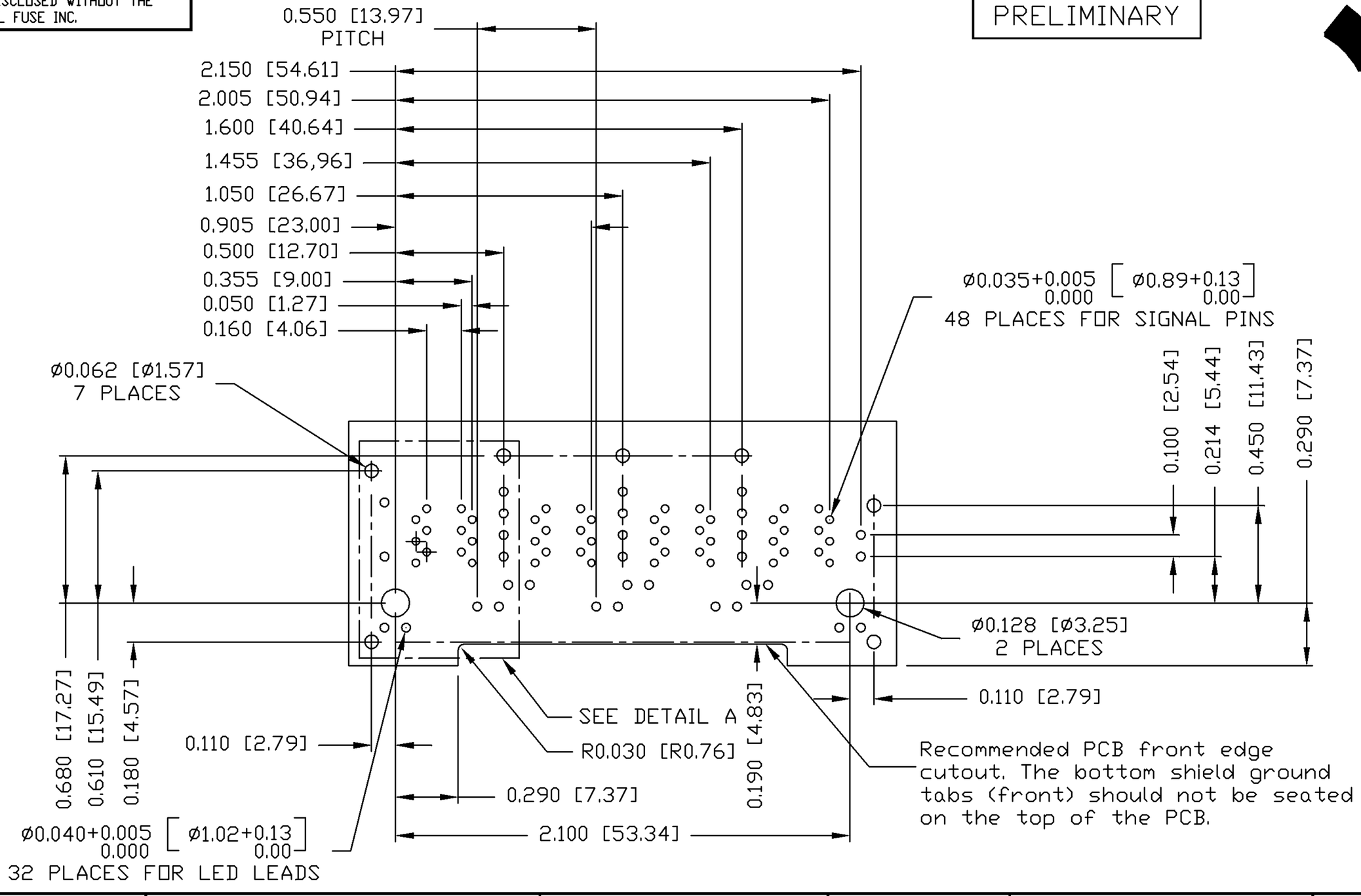

ORIGINATED BY	DATE	TITLE	PART NO. / DRAWING NO.	STANDARD DIM. TOL. IN INCH		[ ] METRIC DIM. AS REFERENCE	
ANTON LIAO	11-28-08	2X4 MagJack® FOR 10/100 WITH UPPER AND LOWER LED (EXT. TEMP.)	0879-2D4R-BV	.X		UNIT : INCH [mm]	REV. : PC
DRAWN BY	DATE		FILE NAME	.XX		SCALE : N/A	SIZE : A4
SANDY LIN	11-28-08		0879-2D4R-BV_PC.DWG	.XXX	±0.004		PAGE : 5

bel COMPONENTS FOR A CONNECTED PLANET

This document is electronically generated. This is a controlled copy if used internally

THE INFORMATION CONTAINED HEREIN IS CONSIDERED "PROPRIETARY" TO BEL FUSE INC. AND SHALL NOT BE COPIED, REPRODUCED OR DISCLOSED WITHOUT THE WRITTEN APPROVAL OF BEL FUSE INC.

PRELIMINARY

RoHS 2002/95/EC

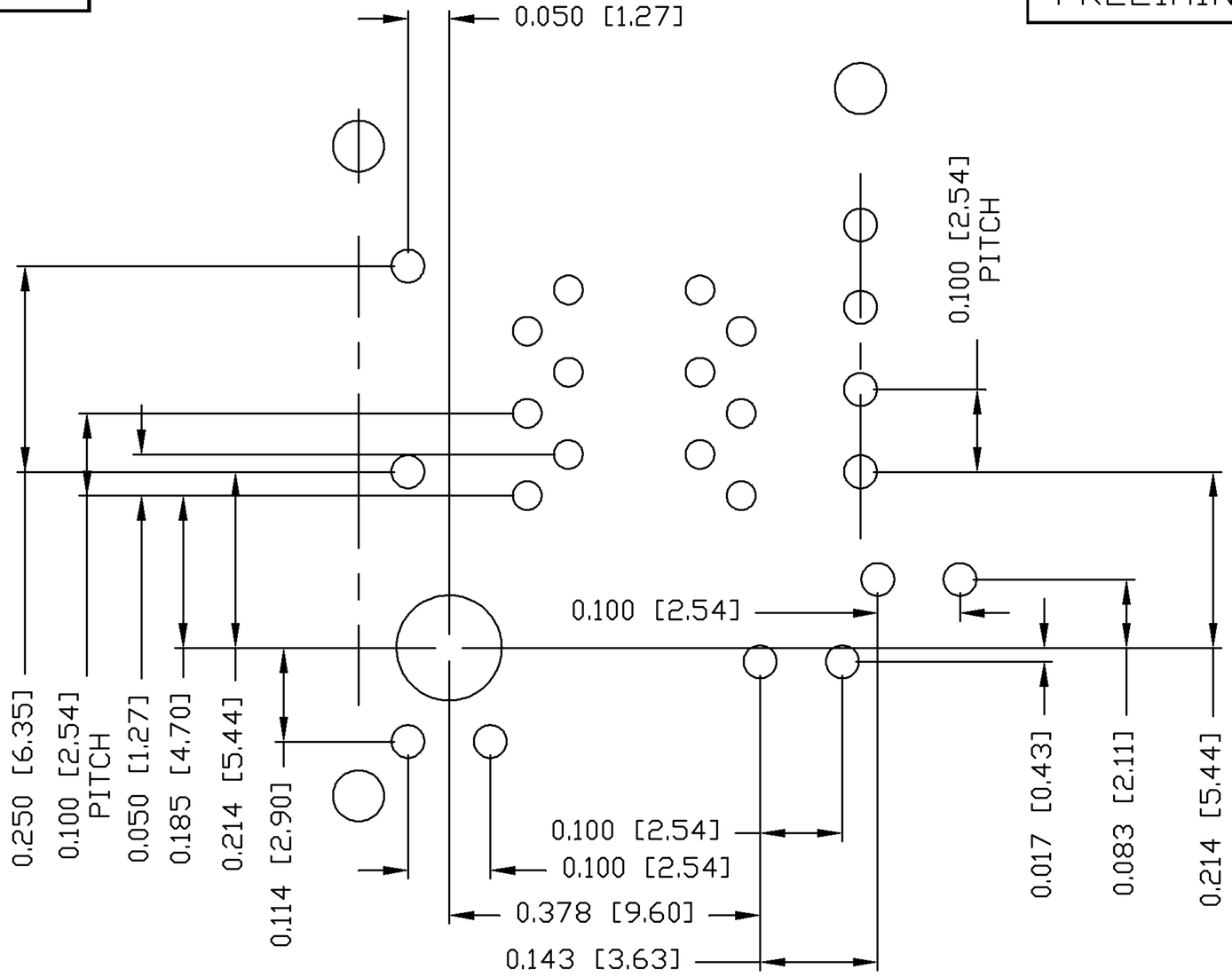

DETAIL A

ORIGINATED BY: ANTON LIAO	DATE: 11-28-08	TITLE: 2X4 MagJack® FOR 10/100 WITH UPPER AND LOWER LED (EXT. TEMP.)	PART NO. / DRAWING NO.: 0879-2D4R-BV	STANDARD DIM. TOL. IN INCH: .X, .XX, .XXX ±0.004	[ ] METRIC DIM. AS REFERENCE
DRAWN BY: SANDY LIN	DATE: 11-28-08		FILE NAME: 0879-2D4R-BV_PC.DWG		UNIT : INCH [mm] / REV. : PC; SCALE : N/A / SIZE : A4; PAGE : 6

bel COMPONENTS FOR A CONNECTED PLANET

This document is electronically generated. This is a controlled copy if used internally

THE INFORMATION CONTAINED HEREIN IS CONSIDERED "PROPRIETARY" TO BEL FUSE INC. AND SHALL NOT BE COPIED, REPRODUCED OR DISCLOSED WITHOUT THE WRITTEN APPROVAL OF BEL FUSE INC.

PRELIMINARY

RoHS 2002/95/EC

SUGGESTED PANEL OPENING

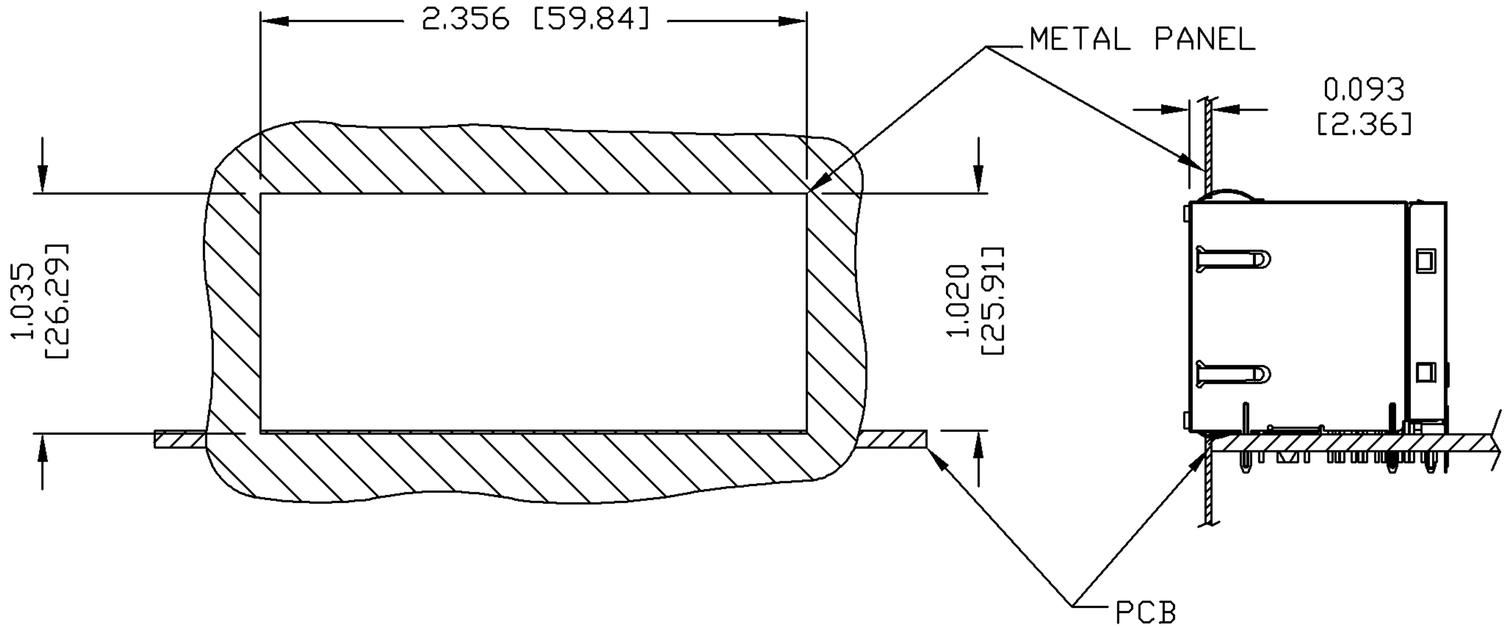

NOTE:

THE DISTANCE OF PANEL INSIDE SURFACE RELATIVE TO FRONT SURFACE OF PART IS ONLY A SUGGESTION.
IN CASE THIS DISTANCE IS DIFFERENT, THE REQUIRED PANEL OPENING DIMENSIONS CHANGE ACCORDINGLY.

PACKING INFORMATION

PACKING TRAY : 0200-9999-Q1 (TOP)
0200-9999-Q2(BOTTOM)

PACKING QUANTITY : 20 PCS FINISHED GOODS PER TRAY
7 TRAYS (140 PCS FINISHED GOODS) PER CARTON BOX

NOTE : CARDBOARDS ARE PLACED BETWEEN LAYERS OF PACKING TRAY INSIDE CARTON BOX
(INCLUDE THE UPPERMOST AND LOWERMOST TRAY)

ORIGINATED BY: ANTON LIAO	DATE: 11-28-08	TITLE: 2X4 MagJack® FOR 10/100 WITH UPPER AND LOWER LED (EXT. TEMP.)	PART NO. / DRAWING NO.: 0879-2D4R-BV	STANDARD DIM. TOL. IN INCH: .X, .XX, .XXX ±0.004	[ ] METRIC DIM. AS REFERENCE
DRAWN BY: SANDY LIN	DATE: 11-28-08		FILE NAME: 0879-2D4R-BV_PC.DWG		UNIT : INCH [mm] / REV. : PC; SCALE : N/A / SIZE : A4; PAGE : 7

bel COMPONENTS FOR A CONNECTED PLANET

This document is electronically generated. This is a controlled copy if used internally