# INTEGRATED CONNECTOR MODULES

## 0833-2X8R-55-F Power over Ethernet MagJack® 2 x 8

RoHS 2002/95/EC

### ELECTRICAL CHARACTERISTICS @ 25°C

| | |
|---|---|
| TURNS RATIO | 1CT : 1CT ±2% |
| OCL @ 0.1V, 100KHz | |
| 8mA DC BIAS | 350µH MIN. |
| INSERTION LOSS | |
| 100KHz TO 100MHz | -1.5 dB MAX. |
| RETURN LOSS (MIN.) | |
| 2MHz-30MHz | 16 dB MIN. |
| 60MHz-80MHz | 10 dB MIN. |
| LEAKAGE INDUCTANCE | |
| PRIMARY W/ SECONDARY SHORTED | 0.25µH MAX. @ 1MHz |
| D.C. RESISTANCE | |
| (9-8)=(7-6) | 1.4 OHM . |
| (RJ1-RJ2)=(RJ3-RJ6) | 1.0 OHM . |
| INTERWINDING CAPACITANCE | |
| PER CHANNEL (PRI. to SEC.) | 40 pF MAX. |
| XTALK | |
| 100KHz TO 100MHz | -30 dB MIN. |
| HIPOT | 2250 VDC |

### SCHEMATIC

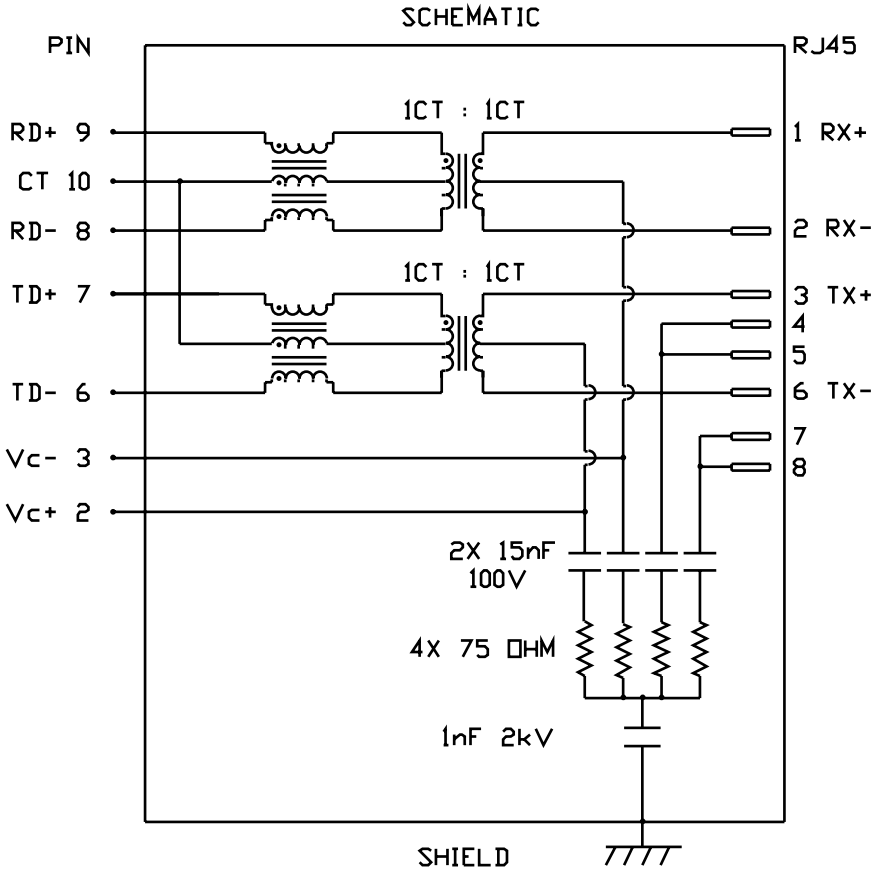


MagJack®

©2006 Bel Fuse Inc. Specifications subject to change without notice. 03.06

# INTEGRATED CONNECTOR MODULES

## 0833-2X8R-55-F Power over Ethernet MagJack® 2 x 8

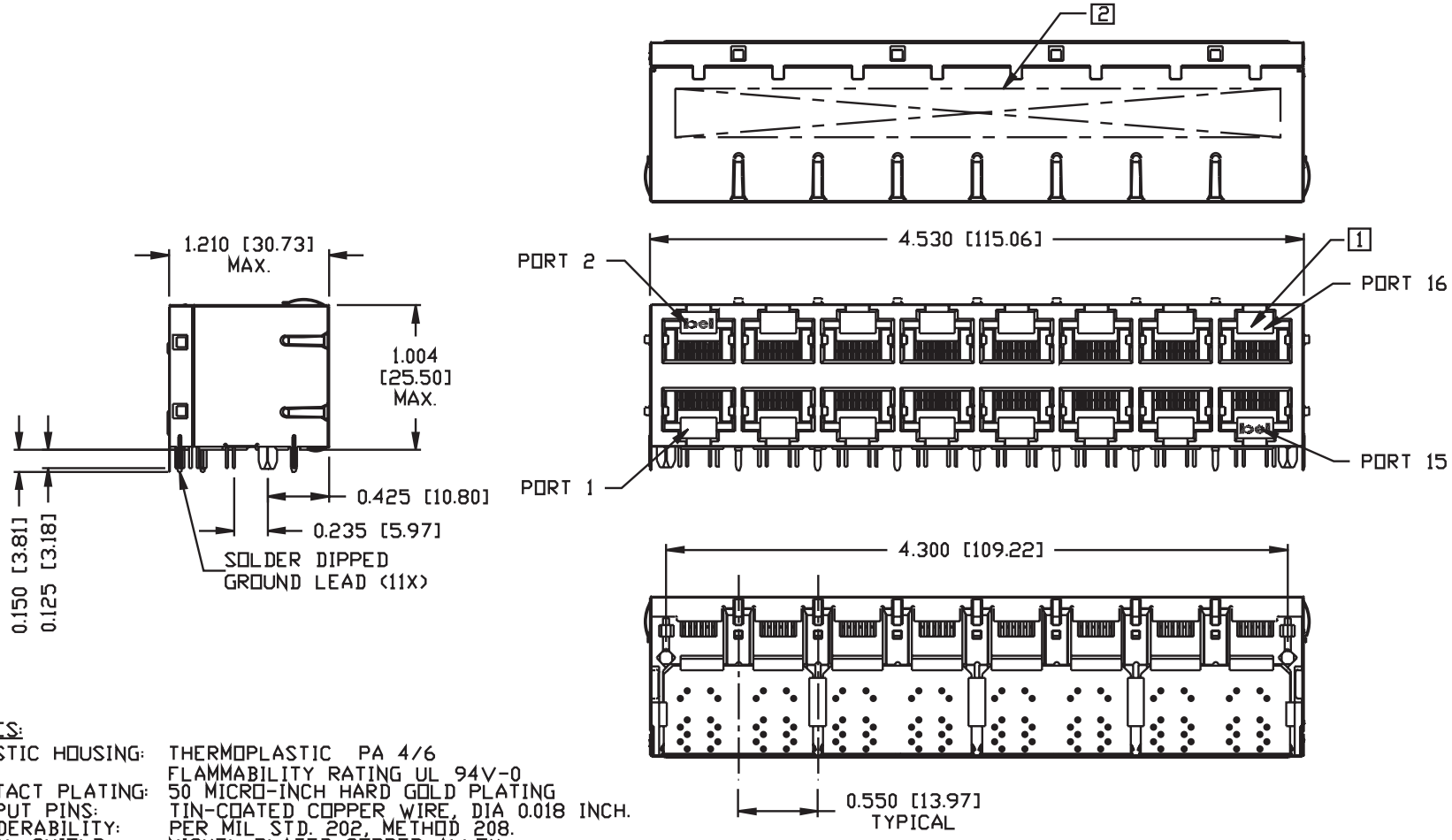


NOTES:

| | |
|---|---|
| PLASTIC HOUSING: | THERMOPLASTIC PA 4/6 FLAMMABILITY RATING UL 94V-0 |
| CONTACT PLATING: | 50 MICRO-INCH HARD GOLD PLATING |
| OUTPUT PINS: | TIN-COATED COPPER WIRE, DIA 0.018 INCH. |
| SOLDERABILITY: | PER MIL STD. 202, METHOD 208. |
| METAL SHIELD: | NICKEL PLATED COPPER ALLOY. (ALL GROUND LEADS ARE SOLDER DIPPED) |

1. JACK CAVITY CONFORMS TO FCC RULES AND REGULATIONS, PART 68 SUBPART F.
2. MARK PART WITH MFG LOGO , MFG NAME , PART NUMBER, AND DATE CODE
3. RoHS COMPLIANCE, PER EU DIRECTIVE 2002/95/EC.

MagJack®

©2006 Bel Fuse Inc. Specifications subject to change without notice. 03.06

# INTEGRATED CONNECTOR MODULES

## 0833-2X8R-55-F Power over Ethernet MagJack® 2 x 8

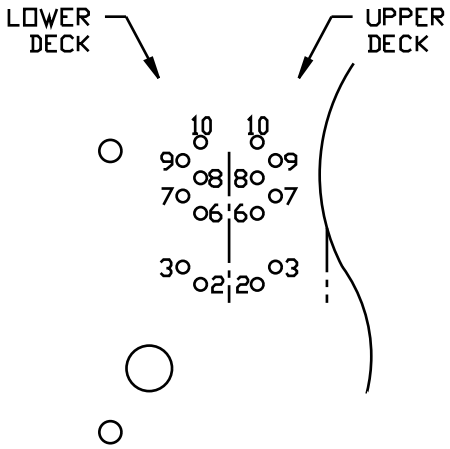


PIN-OUT INFORMATION
(COMPONENT SIDE VIEW)

| | |
|---|---|
| 10 | COMMON CT |
| 9 | RD+ |
| 8 | RD- |
| 7 | TD+ |
| 6 | TD- |
| 5 | NO PIN |
| 4 | NO PIN |
| 3 | Vc- |
| 2 | Vc+ |
| 1 | NO PIN |

UNUSED PIN LOCATIONS MUST BE REMOVED TO ENSURE 2KV ISOLATION.

PORT ASSIGNMENT
(COMPONENT SIDE VIEW)

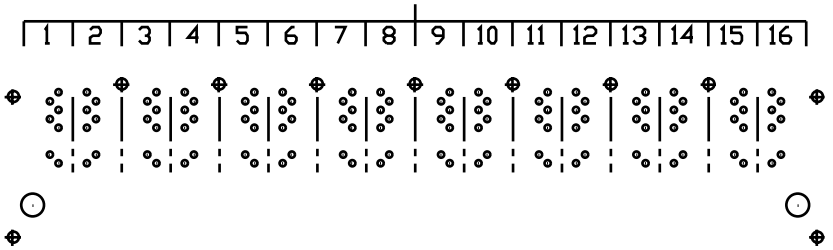


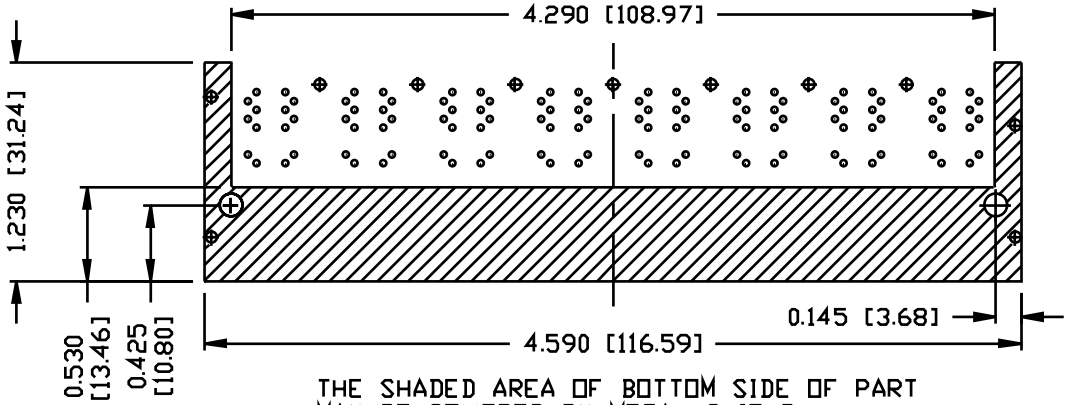


THE SHADED AREA OF BOTTOM SIDE OF PART MAY BE COVERED BY METAL SHIELD.



©2006 Bel Fuse Inc. Specifications subject to change without notice. 03.06

**Bel Fuse Inc.** 206 Van Vorst Street, Jersey City, NJ 07302 • Tel 201-432-0463 • Fax 201-432-9542 • www.belfuse.com

# INTEGRATED CONNECTOR MODULES

## 0833-2X8R-55-F Power over Ethernet MagJack® 2 x 8

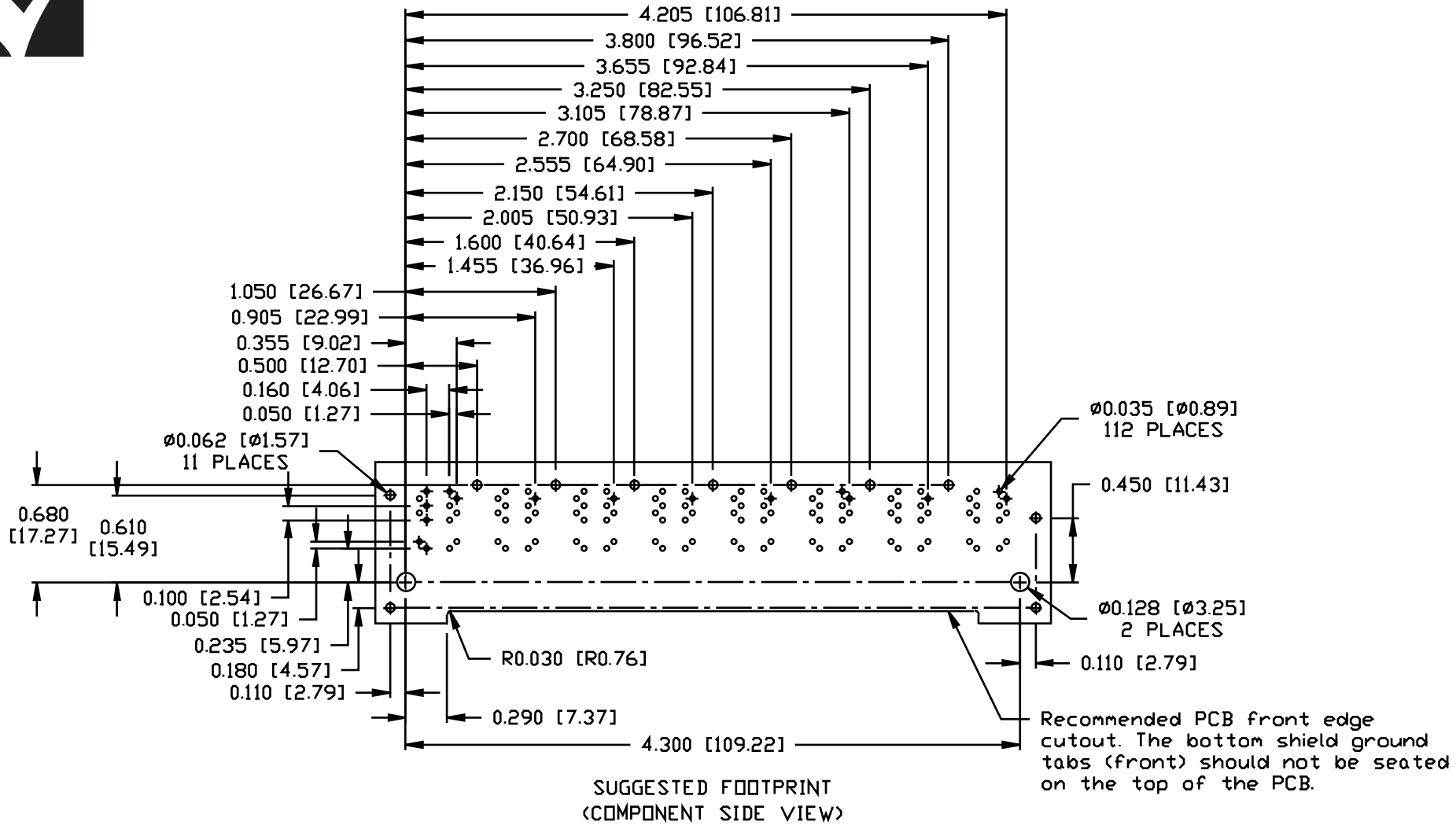


SUGGESTED FOOTPRINT
(COMPONENT SIDE VIEW)

MagJack®

©2006 Bel Fuse Inc. Specifications subject to change without notice. 03.06

# INTEGRATED CONNECTOR MODULES

## 0833-2X8R-55-F Power over Ethernet MagJack® 2 x 8

RoHS 2002/95/EC

SUGGESTED PANEL OPENING

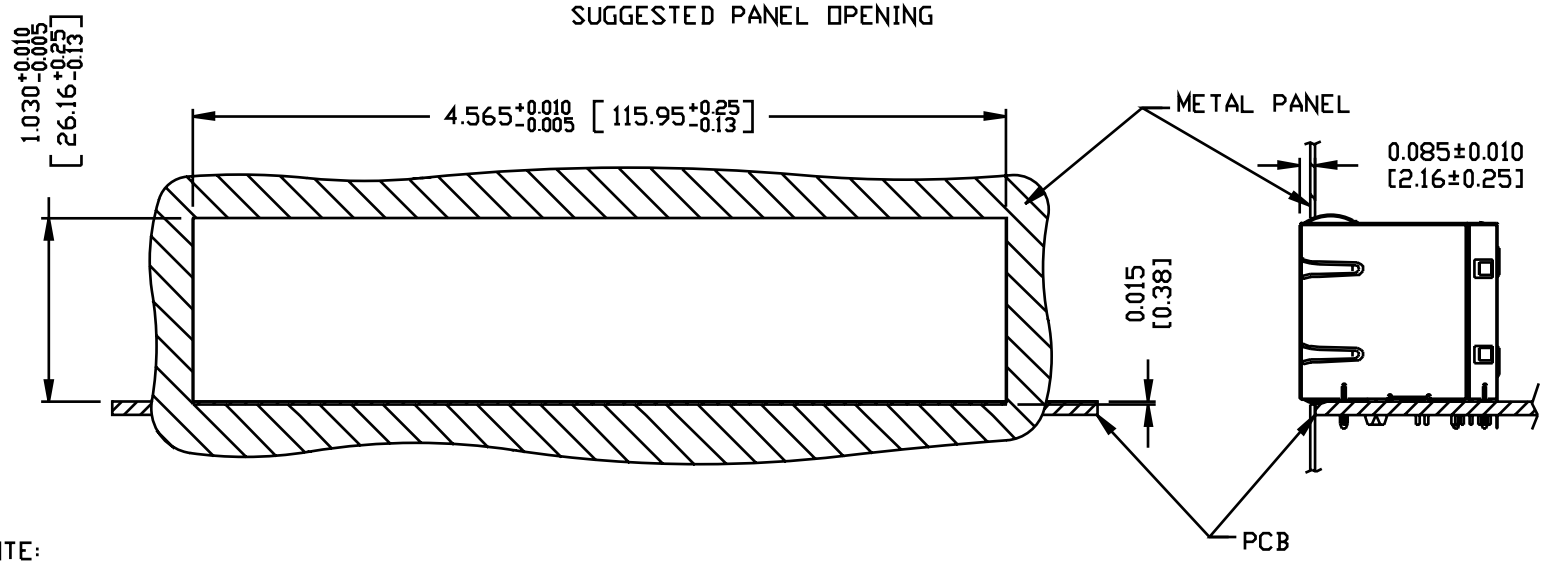


NOTE:

THE DISTANCE OF PANEL INSIDE SURFACE RELATIVE TO FRONT SURFACE OF PART IS ONLY A SUGGESTION.
IN CASE THIS DISTANCE IS DIFFERENT, THE REQUIRED PANEL OPENING DIMENSIONS CHANGE ACCORDINGLY.

PACKING INFORMATION

PACKING TRAY : 0200-0148-44 (TOP)
0200-0148-43 (BOTTOM)

PACKING QUANTITY : 10 PCS FINISHED GOODS PER TRAY
7 TRAY (70 PCS FINISHED GOODS) PER CARTON BOX

NOTE : CARDBOARDS ARE PLACED BETWEEN LAYERS OF PACKING TRAY INSIDE CARTON BOX
(INCLUDE THE UPPERMOST AND LOWERMOST TRAY)

MagJack®

©2006 Bel Fuse Inc. Specifications subject to change without notice. 03.06