THE INFORMATION CONTAINED HEREIN IS CONSIDERED "PROPRIETARY" TO BEL FUSE INC. AND SHALL NOT BE COPIED, REPRODUCED OR DISCLOSED WITHOUT THE WRITTEN APPROVAL OF BEL FUSE INC.

RoHS

NOTES:

MECHANICAL:
1. SHIELD METERIAL: COPPER ALLOY (OR STEEL ALLOY) 0.20mm THICKNESS PLATING NI.
2. Grouding leg of USB:Phosohor Bronze,Thickness=0.30mm finish:100u"min Tin over50~100u"min Nickel
3. HOUSING MATERIAL : PBT+30%GF. THERMOPLASTIC UL94V-0;
4. INSERT MATERIAL : PBT+30%GF. THERMOPLASTIC UL94V-0;
5. CONTACT MATERIAL : PHOSPHORUS BRONZE t=0.35mm. (C5191H)
5. PLATING : 1. MATING AREA- Gold flash. GOLD OVER 30-80u" BRIGHT NICKEL.
2. SOLDER AREA- 75-300u" TIN OVER 30-80u" NICKEL.
3. LED PINS AREA- 75-300u" TIN OVER 30-80u" NICKEL.

RJ45 SPECIFCATIONS:
1.ELECTRICAL CHARACTERISTICS:
1-1.DIELECTRIC STEENGTH:1500VAC RMS 60Hz,1MIN.
1-2.LED'S CHARACTERISTICS:
1-2-1.FORWARD CURRENT:30mA MAX.
1-2-2.FORWARD VOLTAGE:2.2 VOLTS TYPICAL.
1-2-3.PEAR EMISSION WAVELENGTH:GREEN LED 568nmTYP, AT IF=20mA.
YELLOW LED 589 nm TYP, AT IF=20mA.
ORANGE LED 610 nm TYP, AT IF=20mA.
1-2-4.ANODE CATHODE
1-3.Mates With Modular Plug Conforming To FCC PART 68, Subpart F.

2.MECHANICAL CHARCTERISTICS:
2-1.MATING/UNMATING FORCE:5 LBS MAXIMUM.
2-2.DURABILITY (MATING/UNMATING CYCLES):1000CYCLES.
2-3.OPERATING TEMPERATURE: -40°C TO +85°C.
STORAGE TEMPERATURE:-40°C TO +85°C.
2-4.CONNECTOR TO PCB INSERTION FORCE < 8LBS.
2-5.PLUG TO JACK RETENTION:10LBS MIN.

USB SPECIFICATIONS:
1.ELECTRICAL CHARACTERISTICS:
1-1.CONTACT CURRENT RATING:1 AMPERE.
1-2.CONTACT RESISTANCE : 30 mOHMS MAX.
1-3.DIELECTRIC WITHSTANDING VOLTAGE:750 VAC RMS 60HZ,1 MIM.
1-4.INSULATION RESISTANCE:1000 MOHMS MIN @500 VDC.
2.MECHANICAL CHARCTERISTICS:
2-1.CONTACT MATING FORCE:34.3N(3.5kg) MAX.
2-2.CONNECTOR UNMATING FORCE :9.8N(1.0kg) MIN.
2-3.DURABILITY:1500 CYCLES.
2-4.OPERATING TEMPERATURE:-40°C TO +85°C.

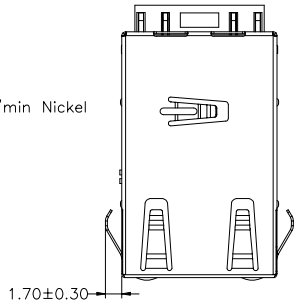

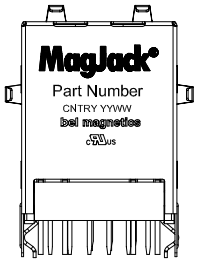

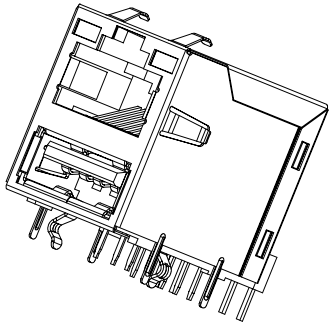

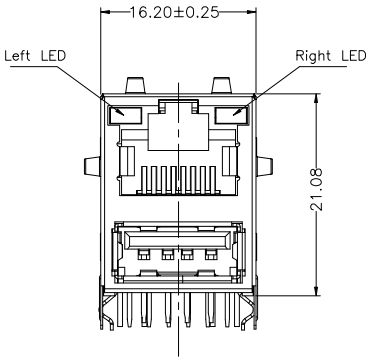

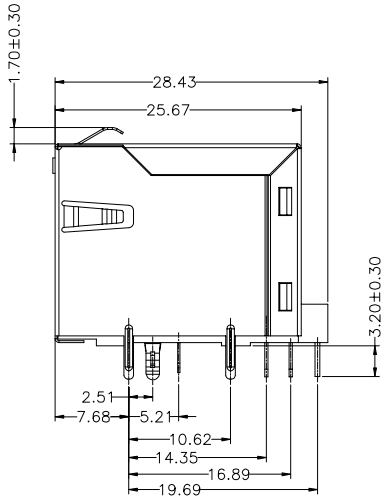

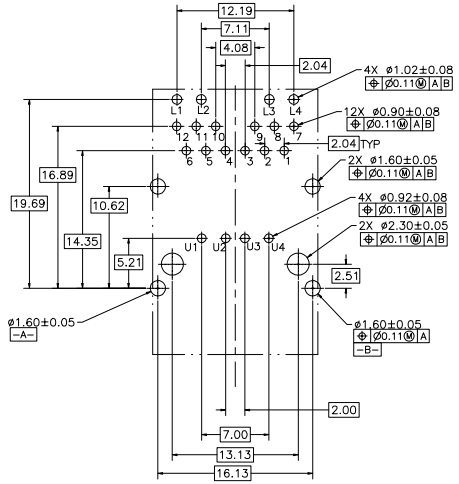

SUGGESTED CUSTOMER BOARD LAYOUT

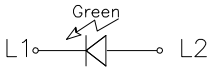

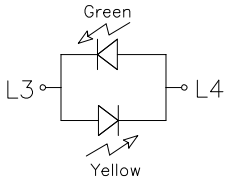

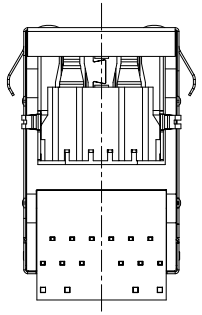

P01-7CJ0-01
PART NUMBER

DRAWN	24Apr2024	TITLE	Gigabit MagJack ® (WITH LED) PATENTED
JARRY YE / FRANK LIU			
CHECKED	24Apr2024	DRAWING NO.	P01-7CJ0
BILL LIU			
APPROVED	24Apr2024	FILE NAME	P01-7CJ0_1.DWG
TONY YUAN			

UNLESS OTHERWISE NOTED, TOL:			
X.	±0.38	SIZE:	A4
.X	±0.38	UNIT:	mm
.XX	±0.25	SCALE:	N/A
.XXX	±0.13	PAGE: 1/3	REV.: 1

bel MAGNETIC SOLUTIONS
a bel group

This document is electronically generated. This is a controlled copy if used internally

Please read our datasheet & drawing disclaimer here.

THE INFORMATION CONTAINED HEREIN IS CONSIDERED "PROPRIETARY" TO BEL FUSE INC. AND SHALL NOT BE COPIED, REPRODUCED OR DISCLOSED WITHOUT THE WRITTEN APPROVAL OF BEL FUSE INC.

RoHS

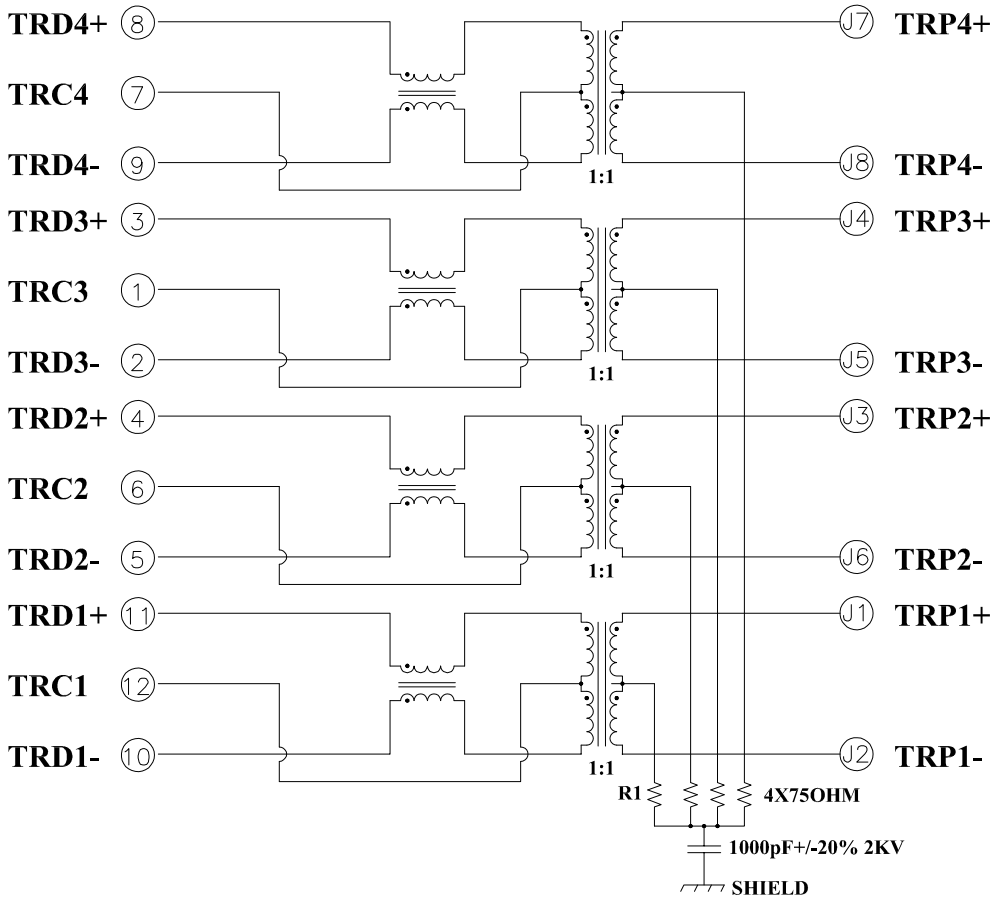

Electrical Specification @ 25 C°

unless otherwise noted

Insertion Loss: 0.5 dB MAX @ 1-60 MHZ
1.0 dB MAX @ 60-100 MHZ
1.2 dB MAX @ 100-125 MHZ

Return Loss: 16.0 dB MIN @ 10-30 MHZ
12.0 dB MIN @ 30-60 MHZ
10.0 dB MIN @ 60-80 MHZ

Cross Talk: 35 dB MIN @ 1-40 MHZ
33-20LOG(f/50) dB MIN @ 40-100 MHZ

CMR: 30 dB MIN @ 1-100 MHZ

Hipot:2250V DC 60S 1mA
OCL:350uH MIN @100KHZ 100mV 8mA DC

DRAWN	24Apr2024 JARRY YE / FRANK LIU	TITLE	Gigabit MagJack ® (WITH LED) PATENTED
CHECKED	24Apr2024 BILL LIU	DRAWING NO.	P01-7CJ0
APPROVED	24Apr2024 TONY YUAN	FILE NAME	P01-7CJ0_1.DWG

UNLESS OTHERWISE NOTED, TOL:			
X.	±0.38	SIZE:	A4
.X	±0.38	UNIT:	mm
.XX	±0.25	SCALE:	N/A
.XXX	±0.13	PAGE: 2/3	REV.: 1

bel MAGNETIC SOLUTIONS
a bel group

This document is electronically generated. This is a controlled copy if used internally

THE INFORMATION CONTAINED HEREIN IS CONSIDERED "PROPRIETARY" TO BEL FUSE INC. AND SHALL NOT BE COPIED, REPRODUCED OR DISCLOSED WITHOUT THE WRITTEN APPROVAL OF BEL FUSE INC.

RoHS

CHANGE HISTORY

ISSUE	DATE	DESCRIPTIN OF CHANGE	REASON	DRAWN	APPROVAL	ECN#
1	24APR2024	–	INITIAL RELEASE	JARRY YE	TONY YUAN	–

DRAWN	24Apr2024	TITLE	Gigabit MagJack ® (WITH LED) PATENTED
JARRY YE / FRANK LIU			
CHECKED	24Apr2024	DRAWING NO.	P01-7CJ0
BILL LIU		FILE NAME	P01-7CJ0_1.DWG
APPROVED	24Apr2024		
TONY YUAN			

UNLESS OTHERWISE NOTED, TOL:			
X.	±0.38	SIZE:	A4
.X	±0.38	UNIT:	mm
.XX	±0.25	SCALE:	N/A
.XXX	±0.13	PAGE: 3/3	REV.: 1

bel MAGNETIC SOLUTIONS
a bel group

This document is electronically generated. This is a controlled copy if used internally