THE INFORMATION CONTAINED HEREIN IS CONSIDERED "PROPRIETARY" TO BEL FUSE INC. AND SHALL NOT BE COPIED, REPRODUCED OR DISCLOSED WITHOUT THE WRITTEN APPROVAL OF BEL FUSE INC.

LED 2 & LED 4 POLARITY			LED 1 & LED 3 POLARITY		
PIN 19	PIN 20	COLOR	PIN 21	PIN 22	COLOR
+	−	GREEN	+	−	GREEN
−	+	ORANGE	−	+	ORANGE

PRELIMINARY

RoHS

ELECTRICAL CHARACTERISTICS @ 25°C

TURNS RATIO

TP1	1CT : 1CT
TP2	1CT : 1CT
TP3	1CT : 1CT
TP4	1CT : 1CT
OCL @ 100kHz/100mVRMS (25°C)	160µH MIN.

INS. LOSS (MAX)

1MHz TO 20MHz	-0.8 dB
50MHz	-1.0 dB
200MHz	-1.2 dB
400MHz	-2.0 dB
500MHz	-3.0 dB

RET. LOSS (MIN) @ 100 OHMS

1MHz	-18 dB
2MHz	-20 dB
10MHz	-20 dB
100MHz	-20 dB
200MHz	-18 dB
300MHz	-15 dB
400MHz	-10 dB
500MHz	-8 dB

CM TO CM REJ

1MHz - 500MHz	-25 dB MIN

CM TO DM REJ

1MHz - 500MHz	-25 dB MIN
HIPOT (Isolation Voltage):	2250VDC

100% OF PRODUCTION TESTED TO COMPLY WITH IEEE 802.3 ISOLATION REQUIREMENTS.

BALANCED DC LINE CURRENT 600mA MAX. CONTINUOUS
1.2A MAX. FOR 200 MILLISECONDS

LEDS 1, 2, 3 AND 4

VF (FORWARD VOLTAGE)	IF=20mA	GREEN	2.2V TYP.
		ORANGE	2.0V TYP.
λD (DOMINANT WAVELENGTH)	IF=20mA	GREEN	570nm TYP.
		ORANGE	605nm TYP.

OPERATING TEMPERATURE: 0°C TO +70°C.

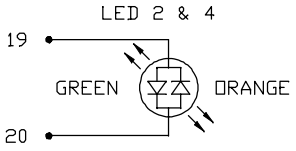

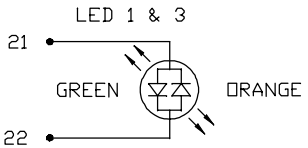

SCHEMATIC

REV. : 6 | PAGE : 2

ORIGINATED BY: CHOW WANCHUNG DATE: 2020-11-30 DRAWN BY: XIE YIMING DATE: 2020-11-30	TITLE: 2X2 10 Gigabit MagJack® 4PPoE PATENTED	PART NO. / DRAWING NO.: G33-411A-104 FILE NAME: G33-411A-104_6.DWG	STANDARD DIM. TOL. IN INCH .X .XX .XXX	[ ] METRIC DIM. AS REF. UNIT : INCH [mm] SCALE : N/A SIZE : A4

bel MAGNETIC SOLUTIONS
a bel group

This document is electronically generated. This is a controlled copy if used internally

THE INFORMATION CONTAINED HEREIN IS CONSIDERED "PROPRIETARY" TO BEL FUSE INC. AND SHALL NOT BE COPIED, REPRODUCED OR DISCLOSED WITHOUT THE WRITTEN APPROVAL OF BEL FUSE INC.

PRELIMINARY

RoHS

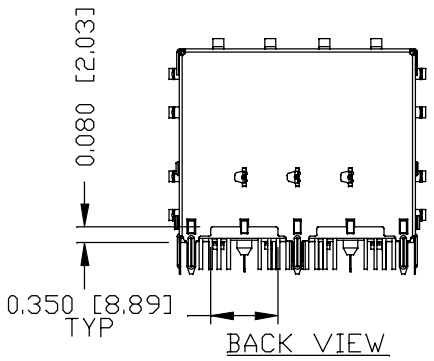

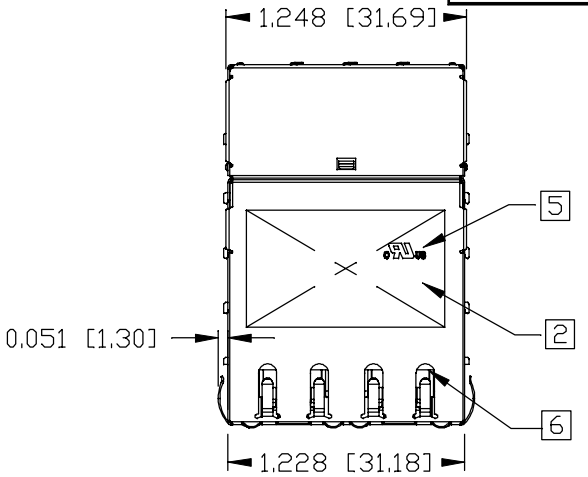

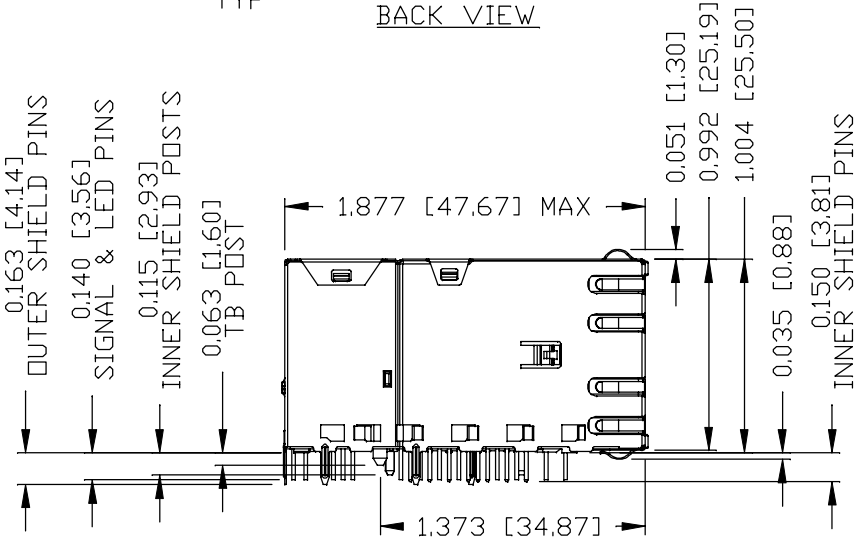

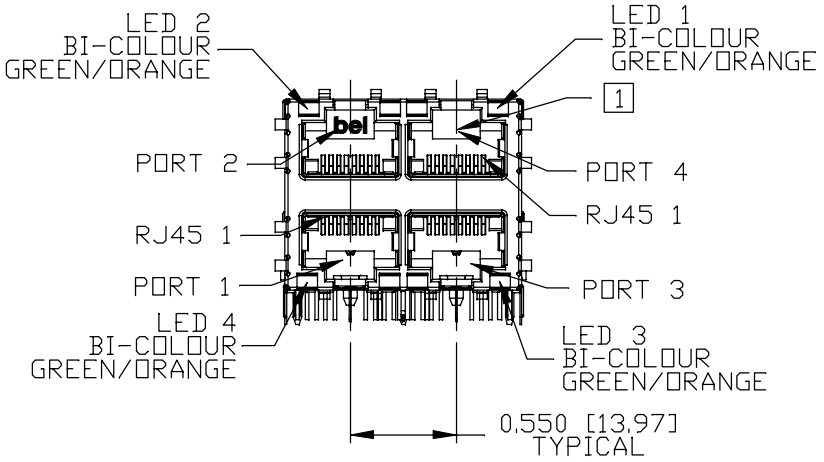

REV. : 6				PAGE : 3	
ORIGINATED BY LI QUANKUN DATE 2020-11-30	TITLE 2X2 10 Gigabit MagJack® 4PPoE PATENTED	PART NO. / DRAWING NO. G33-411A-104	STANDARD DIM. TOL. IN INCH	[ ] METRIC DIM. AS REF.	bel MAGNETIC SOLUTIONS a bel group
DRAWN BY OLIVER ZHANG DATE 2020-11-30		FILE NAME G33-411A-104_6.DWG	.X .XX .XXX ±0.010	UNIT : INCH [mm] SCALE : N/A SIZE : A4	

This document is electronically generated. This is a controlled copy if used internally

THE INFORMATION CONTAINED HEREIN IS CONSIDERED "PROPRIETARY" TO BEL FUSE INC. AND SHALL NOT BE COPIED, REPRODUCED OR DISCLOSED WITHOUT THE WRITTEN APPROVAL OF BEL FUSE INC.

PRELIMINARY

RoHS

NOTES:

PLASTIC HOUSING: THERMOPLASTIC PBT, BLACK
FLAMMABILITY RATING UL 94V-0

CONTACT PLATING: 50 MICRO-INCH HARD GOLD PLATING OR EQUIVALENT.

OUTPUT PINS: TIN-COATED COPPER WIRE, DIA 0.018 INCH.
100 MICRO-INCH MIN MATTE TIN. PINS ARE SOLDER DIPPED.

METAL SHIELD: NICKEL PLATED ON COPPER ALLOY.
OR 0.2MM THICK STAINLESS STEEL.
(ALL GROUND LEADS ARE SOLDER DIPPED)

1. JACK CAVITY CONFORMS TO FCC RULES AND REGULATIONS, PART 68 SUBPART F.
2. MARK PART WITH MFG LOGO, NAME, PART NUMBER AND DATE CODE.
3. THE PRODUCT IS RoHS COMPLIANT.
   c UL us UL RECOGNIZED - FILE #E169987.
4. THE AXIAL RETENTION FORCE OF RJ PORT IS 15LBS MIN..
5. THE PRODUCT IS PATENTED. "PATENTED" MARKING IS ON THE TOP SURFACE. THE PATENT NUMBER ARE U.S. PAT. 7,429,195 & U.S. PAT. 6,840,817 & U.S. PAT. 7,123,117 AND U.S. PAT. 7,924,130.
6. ADD ISOLATION TAPE BETWEEN TOP LED AND METAL SHIELD.
7. THE PART IS RECOMMENDED FOR WAVE SOLDERING. THE SUGGESTED PEAK WAVE SOLDERING CONDITION IS 260°C MAX. AND 10 SECONDS MAX..

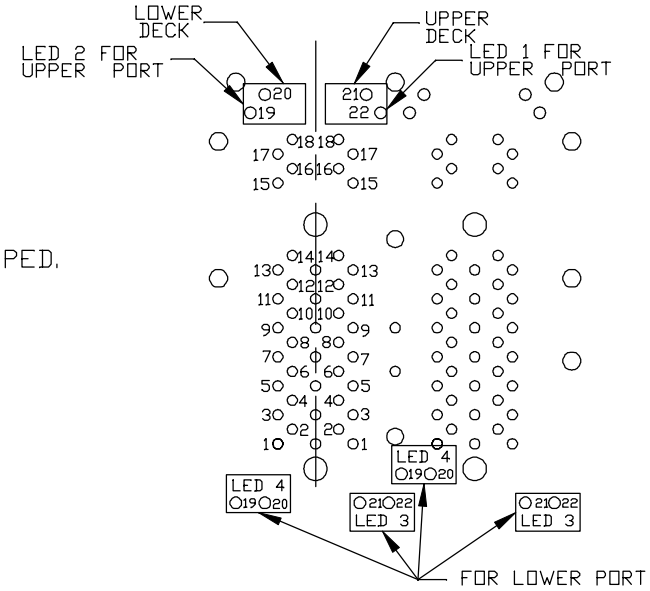

PIN-OUT INFORMATION
(COMPONENT SIDE VIEW)

11	TRD4-	22	GREEN(-)/ORANGE(+)
10	TRD4+	21	GREEN(+)/ORANGE(-)
9	TRCT3	20	GREEN(-)/ORANGE(+)
8	TRD3-	19	GREEN(+)/ORANGE(-)
7	TRD3+	18	VC12
6	TRCT2	17	VC78
5	TRD2-	16	VC45
4	TRD2+	15	VC36
3	TRCT1	14	IET-
2	TRD1-	13	IET+
1	TRD1+	12	TRCT4

REV. : 6 | PAGE : 4

ORIGINATED BY: LI QUANKUN DATE: 2020-11-30	TITLE: 2X2 10 Gigabit MagJack® 4PPoE PATENTED	PART NO. / DRAWING NO.: G33-411A-104	STANDARD DIM. TOL. IN INCH	[ ] METRIC DIM. AS REF.	bel MAGNETIC SOLUTIONS a bel group
DRAWN BY: OLIVER ZHANG DATE: 2020-11-30		FILE NAME: G33-411A-104_6.DWG	.X .XX .XXX ±0.004	UNIT : INCH [mm] SCALE : N/A SIZE : A4	

This document is electronically generated. This is a controlled copy if used internally

THE INFORMATION CONTAINED HEREIN IS CONSIDERED "PROPRIETARY" TO BEL FUSE INC. AND SHALL NOT BE COPIED, REPRODUCED OR DISCLOSED WITHOUT THE WRITTEN APPROVAL OF BEL FUSE INC.

PRELIMINARY

RoHS

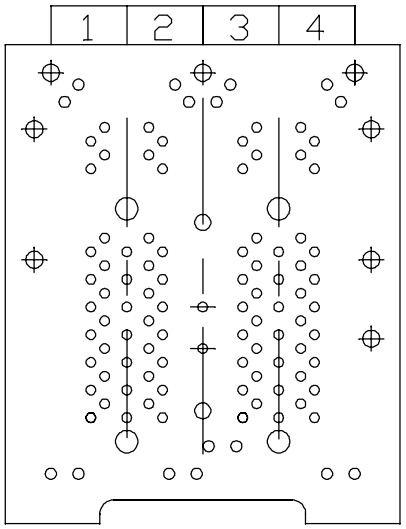

PORT ASSIGNMENT
(COMPONENT SIDE VIEW)

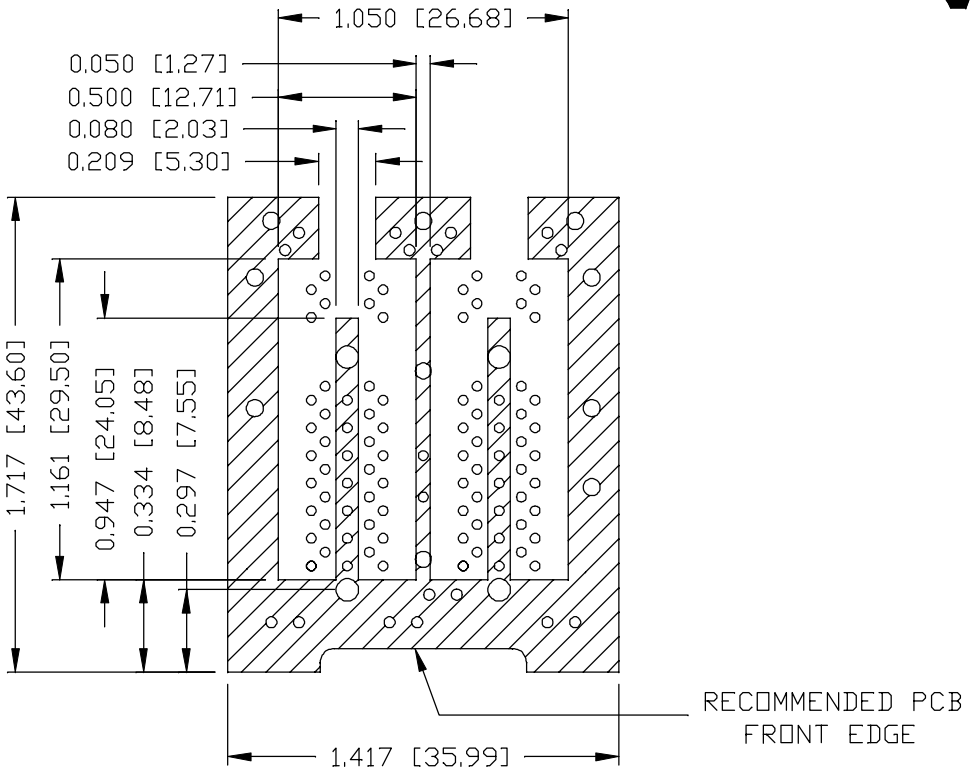

THE SHADED AREA ON THE CUSTOMER BOARD ARE RECOMMENDED TO BE CLEAR OFF ANY VIA HOLE OR COMPONENT PAD.

ORIGINATED BY LI QUANKUN DATE 2020-11-30	TITLE 2X2 10 Gigabit MagJack® 4PPoE PATENTED	PART NO. / DRAWING NO. G33-411A-104	STANDARD DIM. TOL. IN INCH		[ ] METRIC DIM. AS REF.
DRAWN BY OLIVER ZHANG DATE 2020-11-30		FILE NAME G33-411A-104_6.DWG	.X		UNIT : INCH [mm]
			.XX		SCALE : N/A
			.XXX	±0,004	SIZE : A4

bel MAGNETIC SOLUTIONS
a bel group

This document is electronically generated. This is a controlled copy if used internally

THE INFORMATION CONTAINED HEREIN IS CONSIDERED "PROPRIETARY" TO BEL FUSE INC. AND SHALL NOT BE COPIED, REPRODUCED OR DISCLOSED WITHOUT THE WRITTEN APPROVAL OF BEL FUSE INC.

PRELIMINARY

RoHS

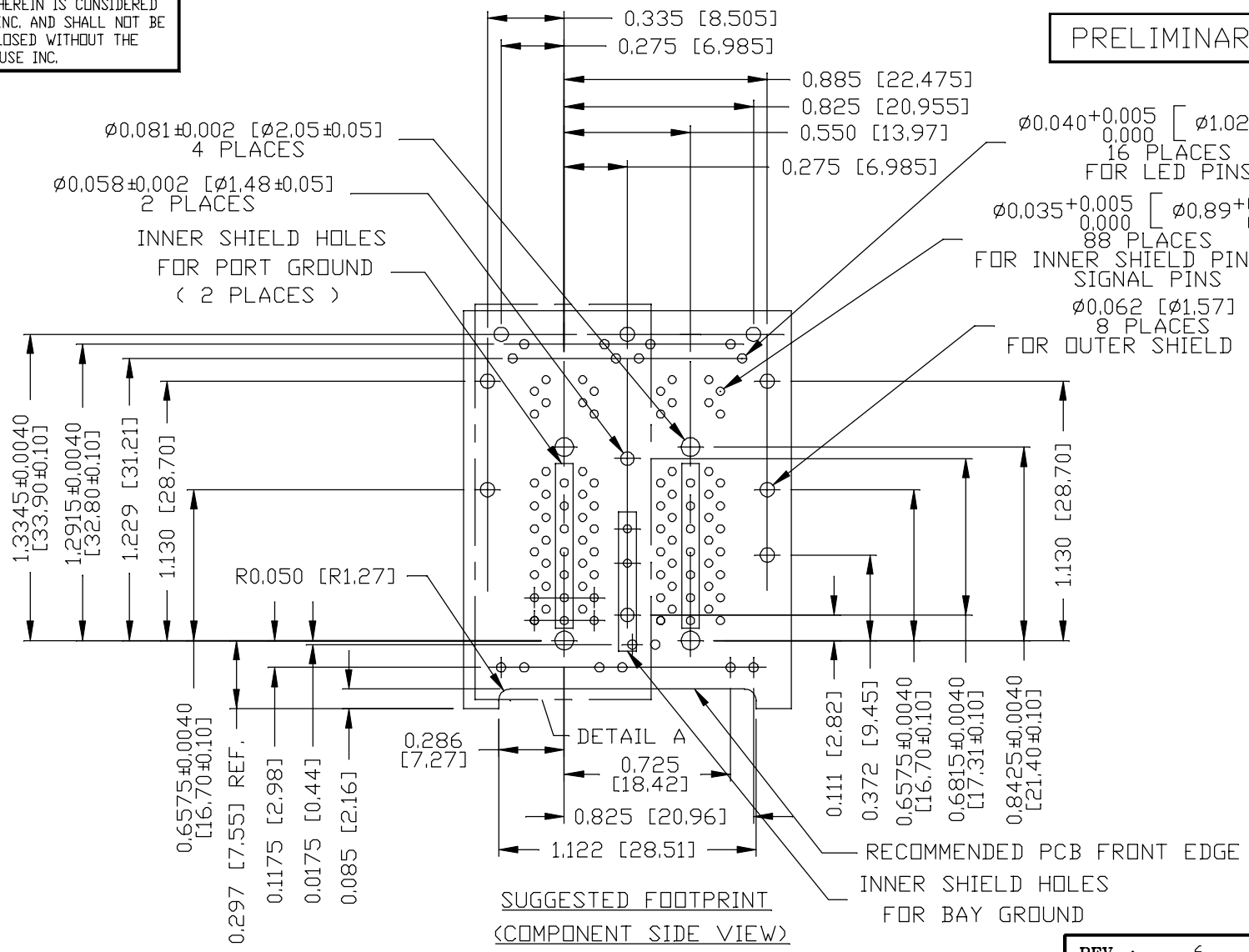

SUGGESTED FOOTPRINT
(COMPONENT SIDE VIEW)

REV. :	6
PAGE :	6

ORIGINATED BY LI QUANKUN DATE 2020-11-30	TITLE 2X2 10 Gigabit MagJack® 4PPoE PATENTED	PART NO. / DRAWING NO. G33-411A-104 FILE NAME G33-411A-104_6.DWG	STANDARD DIM. TOL. IN INCH .X .XX .XXX ±0,004 [ ] METRIC DIM. AS REF. UNIT : INCH [mm] SCALE : N/A SIZE : A4
DRAWN BY OLIVER ZHANG DATE 2020-11-30			

bel MAGNETIC SOLUTIONS
a bel group

This document is electronically generated. This is a controlled copy if used internally

THE INFORMATION CONTAINED HEREIN IS CONSIDERED "PROPRIETARY" TO BEL FUSE INC. AND SHALL NOT BE COPIED, REPRODUCED OR DISCLOSED WITHOUT THE WRITTEN APPROVAL OF BEL FUSE INC.

PRELIMINARY

RoHS

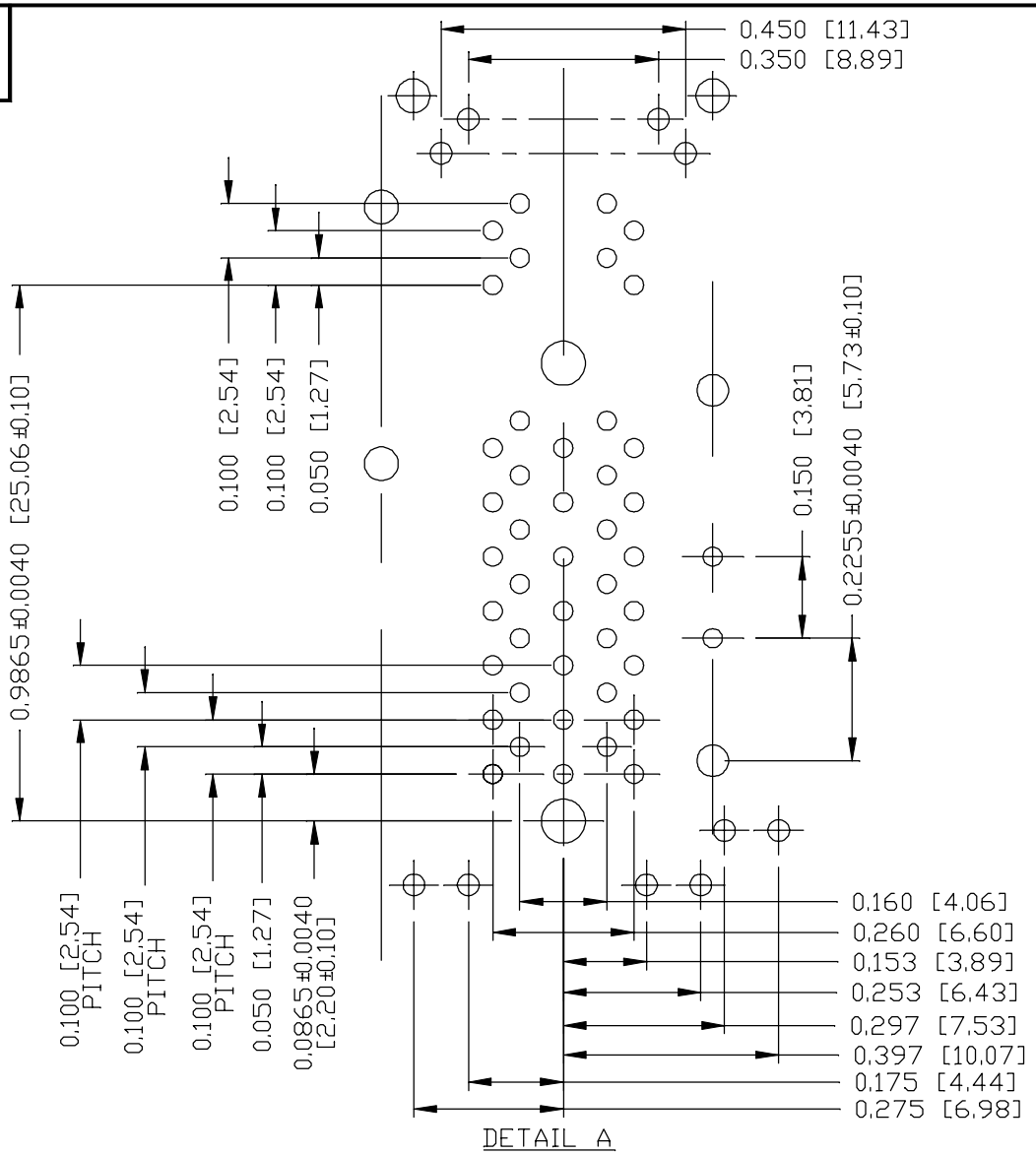

REV. : 6 | PAGE : 7

ORIGINATED BY LI QUANKUN DATE 2020-11-30 DRAWN BY OLIVER ZHANG DATE 2020-11-30	TITLE 2X2 10 Gigabit MagJack® 4PPoE PATENTED	PART NO. / DRAWING NO. G33-411A-104 FILE NAME G33-411A-104_6.DWG	STANDARD DIM. TOL. IN INCH .X .XX .XXX ±0.004	[ ] METRIC DIM. AS REF. UNIT : INCH [mm] SCALE : N/A SIZE : A4

bel MAGNETIC SOLUTIONS
a bel group

This document is electronically generated. This is a controlled copy if used internally

THE INFORMATION CONTAINED HEREIN IS CONSIDERED "PROPRIETARY" TO BEL FUSE INC. AND SHALL NOT BE COPIED, REPRODUCED OR DISCLOSED WITHOUT THE WRITTEN APPROVAL OF BEL FUSE INC.

PRELIMINARY

RoHS

SUGGESTED PANEL OPENING

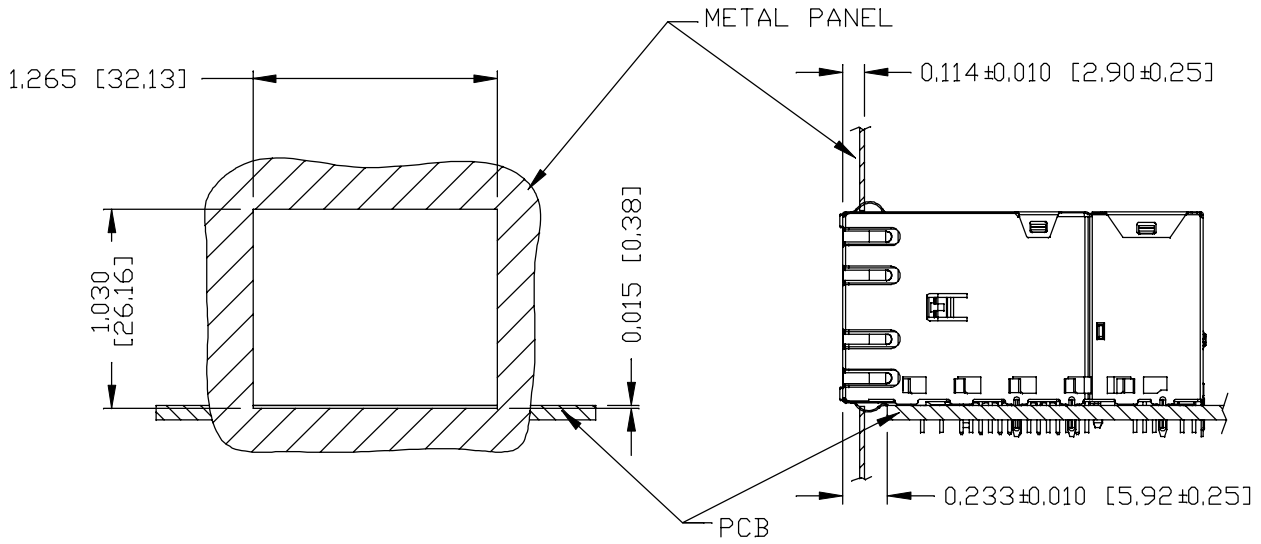

NOTES:

THE DISTANCE OF PANEL INSIDE SURFACE RELATIVE TO FRONT SURFACE OF PART IS ONLY A SUGGESTION. IN CASE THIS DISTANCE IS DIFFERENT, THE REQUIRED PANEL OPENING DIMENSIONS CHANGE ACCORDINGLY.

PACKING INFORMATION

PACKING TRAY : 0200M9999-B8 (TOP)
0200M9999-B9 (BOTTOM)

PACKING QUANTITY : 15 PCS FINISHED GOODS PER TRAY.
7 TRAYS (105 PCS FINISHED GOODS) PER CARTON BOX.

REMARK : CARDBOARDS ARE PLACED BETWEEN LAYERS OF PACKING TRAY INSIDE CARTON BOX.
(INCLUDE THE UPPERMOST AND LOWERMOST TRAY)

ORIGINATED BY LI QUANKUN DATE 2020-11-30	TITLE 2X2 10 Gigabit MagJack® 4PPoE PATENTED	PART NO. / DRAWING NO. G33-411A-104	STANDARD DIM. TOL. IN INCH		[ ] METRIC DIM. AS REF.
DRAWN BY OLIVER ZHANG DATE 2020-11-30		FILE NAME G33-411A-104_6.DWG	.X		UNIT : INCH [mm]
			.XX		SCALE : N/A
			.XXX	±0.005	SIZE : A4

bel MAGNETIC SOLUTIONS
a bel group

This document is electronically generated. This is a controlled copy if used internally