THE INFORMATION CONTAINED HEREIN IS CONSIDERED "PROPRIETARY" TO BEL FUSE INC. AND SHALL NOT BE COPIED, REPRODUCED OR DISCLOSED WITHOUT THE WRITTEN APPROVAL OF BEL FUSE INC.

LED1 POLARITY		
PIN 17	PIN 18	COLOR
+	–	GREEN
–	+	ORANGE

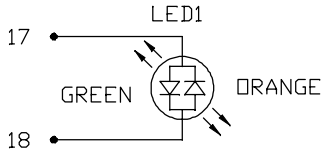

PRELIMINARY

RoHS

ELECTRICAL CHARACTERISTICS @ 25°C

TURNS RATIO

TP1	1CT : 1CT
TP2	1CT : 1CT
TP3	1CT : 1CT
TP4	1CT : 1CT

INS. LOSS (MAX)

1MHz TO 20MHz	-0.8 dB
50MHz	-1.0 dB
200MHz	-1.2 dB
400MHz	-2.0 dB
500MHz	-3.0 dB

RET. LOSS (MIN) @ 100 OHMS

1MHz	-18 dB
2MHz	-20 dB
10MHz	-20 dB
100MHz	-20 dB
200MHz	-18 dB
300MHz	-15 dB
400MHz	-10 dB
500MHz	-8 dB

CM TO CM REJ
1MHz - 500MHz -25 dB MIN

CM TO DM REJ
1MHz - 500MHz -25 dB MIN

HIPOT (Isolation Voltage): 2250VDC
100% OF PRODUCTION TESTED TO COMPLY WITH IEEE 802.3 ISOLATION REQUIREMENTS.

BALANCED DC LINE CURRENT 600 mA MAX.
@ 57 VDC CONTINUOUS
1.2 A MAX.
@ 57 VDC for 200 MILLISECONDS

LED 1

VF (FORWARD VOLTAGE)	IF=20mA	GREEN	2.2V TYP.
		ORANGE	2.0V TYP.
λD (DOMINANT WAVELENGTH)	IF=20mA	GREEN	570nm TYP.
		ORANGE	605nm TYP.

OPERATING TEMPERATURE: 0°C TO +70°C.

SCHEMATIC

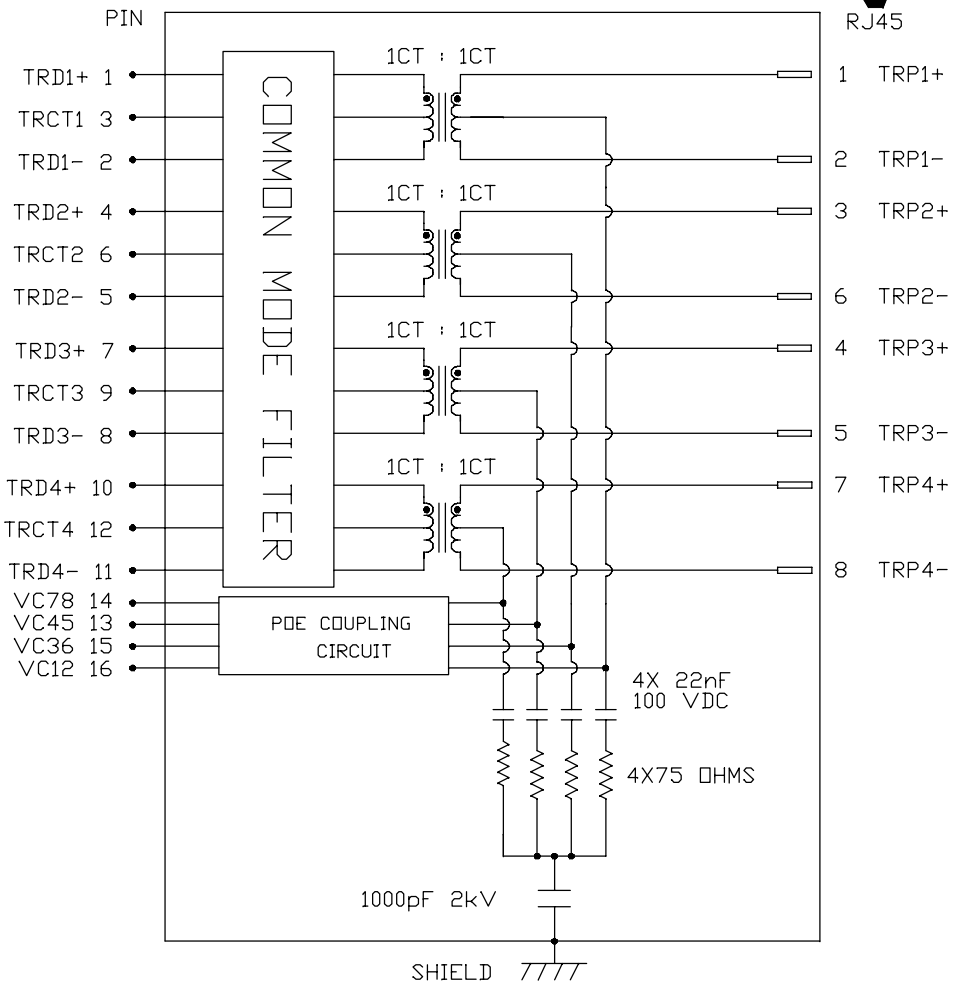

REV. :	PD
PAGE :	2

ORIGINATED BY CHOW WANCHUNG DATE 2016-12-14	TITLE 1X4 10 gigabit MagJack® 4PPoE PATENTED G04-4N1A-125L	PART NO. / DRAWING NO. G04-4N1A125L	STANDARD DIM. TOL. IN INCH .X .XX .XXX	[ ] METRIC DIM. AS REF. UNIT : INCH [mm] SCALE : N/A SIZE : A4
DRAWN BY LI LINFENG DATE 2016-12-14		FILE NAME G04-4N1A125L_PD.DWG		

bel MAGNETIC SOLUTIONS
a bel group

This document is electronically generated. This is a controlled copy if used internally

THE INFORMATION CONTAINED HEREIN IS CONSIDERED "PROPRIETARY" TO BEL FUSE INC. AND SHALL NOT BE COPIED, REPRODUCED OR DISCLOSED WITHOUT THE WRITTEN APPROVAL OF BEL FUSE INC.

PRELIMINARY

MECHANICAL SPECIFICATION

RoHS

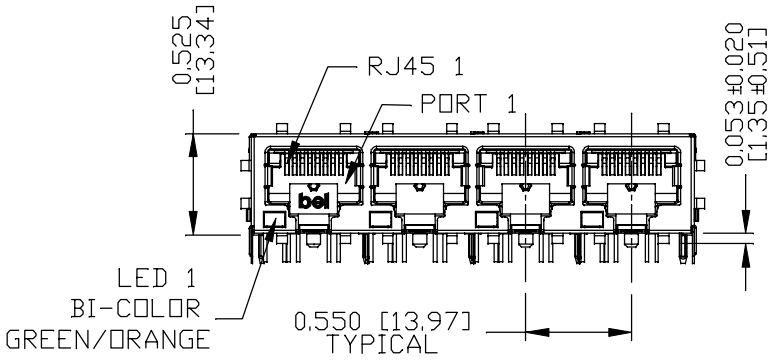

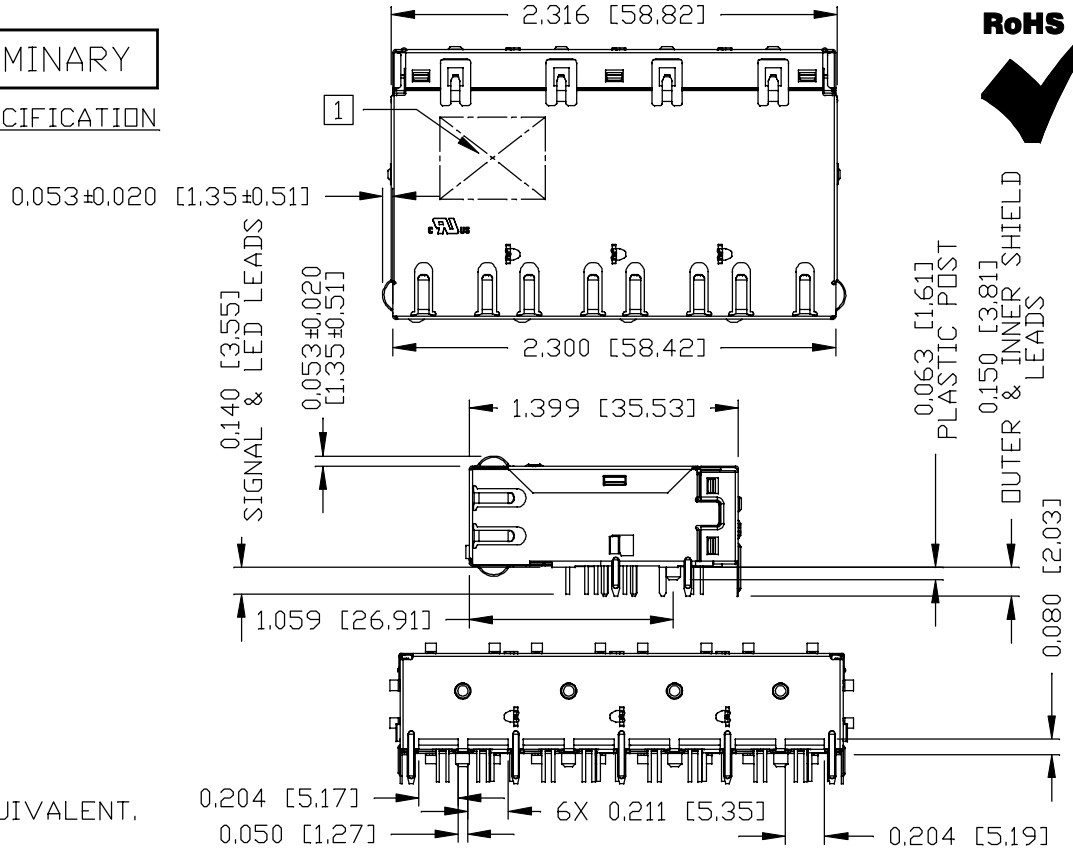

BACK VIEW

NOTES:

PLASTIC HOUSING: THERMOPLASTIC PBT, BLACK.
FLAMMABILITY RATING UL 94V-0

CONTACTS: 50 MICRO-INCH HARD GOLD PLATING OR EQUIVALENT.
30 MICRO-INCH MIN NICKEL UNDERPLATE.

OUTPUT PINS: TIN-COATED COPPER WIRE, DIA 0.018 INCH.
100 MICRO-INCH MIN MATTE TIN. PINS ARE SOLDER DIPPED.

METAL SHIELD: NICKEL OR TIN PLATED ON COPPER ALLOY.
OR 0.2MM THICK STAINLESS STEEL.
(ALL GROUND LEADS ARE SOLDER DIPPED)

1. MARK PART WITH MFG. LOGO, MFG. NAME, PART NUMBER, DATE CODE AND "PATENTED".
2. THE PRODUCT IS RoHS COMPLIANT.

c UL us UL RECOGNIZED - FILE #E169987.

3. JACK CAVITY CONFORMS TO FCC RULES AND REGULATIONS, PART 68 SUBPART F.
4. THE PRODUCT IS PATENTED, THE PATENT NUMBER ARE U.S. PAT. 7,924,130 & U.S. PAT. 7,429,195 & U.S. PAT. 6,840,817 AND U.S. PAT. 7,123,117.
5. THE PART IS RECOMMENDED FOR WAVE SOLDERING. THE SUGGESTED PEAK WAVE SOLDERING CONDITION IS 260°C MAX AND 10 SECONDS MAX.

REV. : PD | PAGE : 3

ORIGINATED BY: SANDY LIN DATE: 2016-12-14	TITLE: 1X4 10 gigabit MagJack® 4PPoE PATENTED G04-4N1A-125L	PART NO. / DRAWING NO.: G04-4N1A125L	STANDARD DIM. TOL. IN INCH: .X ; .XX ; .XXX ±0.010
DRAWN BY: XUE RIPING DATE: 2016-12-14		FILE NAME: G04-4N1A125L_PD.DWG	[ ] METRIC DIM. AS REF. UNIT : INCH [mm] SCALE : N/A SIZE : A4

bel MAGNETIC SOLUTIONS
a bel group

This document is electronically generated. This is a controlled copy if used internally

THE INFORMATION CONTAINED HEREIN IS CONSIDERED "PROPRIETARY" TO BEL FUSE INC. AND SHALL NOT BE COPIED, REPRODUCED OR DISCLOSED WITHOUT THE WRITTEN APPROVAL OF BEL FUSE INC.

PRELIMINARY

RoHS

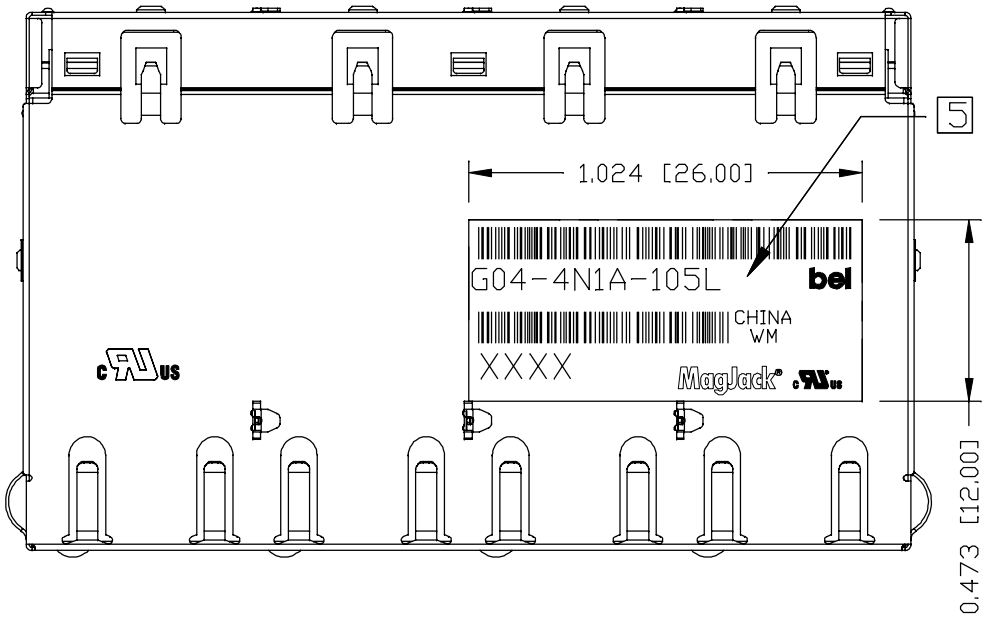

NOTES:

5. LABEL IS LOTACTED IN THE APPROXIMATE AREA SHOWN.
THE CONTENTS ON LABEL ARE BAR CODE OF PART NUMBER,
PART NUMBER, BAR CODE OF DATE CODE, DATE CODE, BEL LOGO,
COUNTRY OF ORIGIN AND AGENCY APPROVAL LOGO.

				REV. : PD	PAGE : 4
ORIGINATED BY SANDY LIN DATE 2016-12-14	TITLE 1X4 10 gigabit MagJack® 4PPoE PATENTED G04-4N1A-125L	PART NO. / DRAWING NO. G04-4N1A125L	STANDARD DIM. TOL. IN INCH	[ ] METRIC DIM. AS REF.	bel MAGNETIC SOLUTIONS a bel group
DRAWN BY XUE RIPING DATE 2016-12-14		FILE NAME G04-4N1A125L_PD.DWG	.X .XX .XXX ±0.020	UNIT : INCH [mm] SCALE : N/A SIZE : A4	

This document is electronically generated. This is a controlled copy if used internally

THE INFORMATION CONTAINED HEREIN IS CONSIDERED "PROPRIETARY" TO BEL FUSE INC. AND SHALL NOT BE COPIED, REPRODUCED OR DISCLOSED WITHOUT THE WRITTEN APPROVAL OF BEL FUSE INC.

PRELIMINARY

RoHS

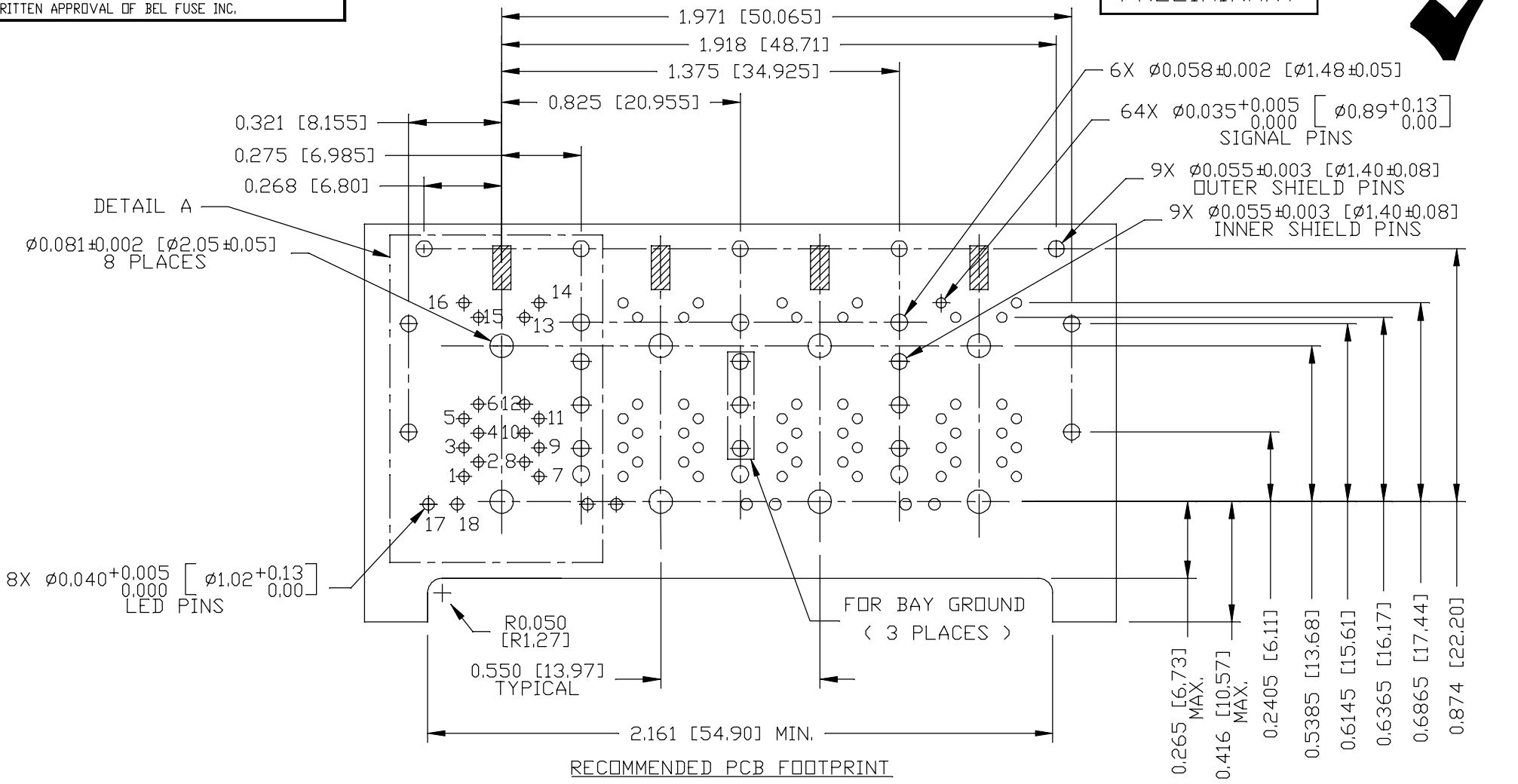

RECOMMENDED PCB FOOTPRINT
COMPONENT SIDE VIEW

ORIGINATED BY SANDY LIN DATE 2016-12-14	TITLE 1X4 10 gigabit MagJack® 4PPoE PATENTED G04-4N1A-125L	PART NO. / DRAWING NO. G04-4N1A125L	STANDARD DIM. TOL. IN INCH	[ ] METRIC DIM. AS REF.	REV. : PD / PAGE : 5
DRAWN BY XUE RIPING DATE 2016-12-14		FILE NAME G04-4N1A125L_PD.DWG	.X / .XX / .XXX ±0.004	UNIT : INCH [mm] SCALE : N/A SIZE : A4	bel MAGNETIC SOLUTIONS a bel group

This document is electronically generated. This is a controlled copy if used internally

THE INFORMATION CONTAINED HEREIN IS CONSIDERED "PROPRIETARY" TO BEL FUSE INC. AND SHALL NOT BE COPIED, REPRODUCED OR DISCLOSED WITHOUT THE WRITTEN APPROVAL OF BEL FUSE INC.

PRELIMINARY

RoHS

THE GROUNDING TAB OF CONNECTOR IS ON THE TOP OF HATCHED AREA. IT IS RECOMMENDED THIS AREA TO BE CLEAR OF ANY COMPONENT AND CIRCUIT TRACE EXCEPT GROUNDING TRACE

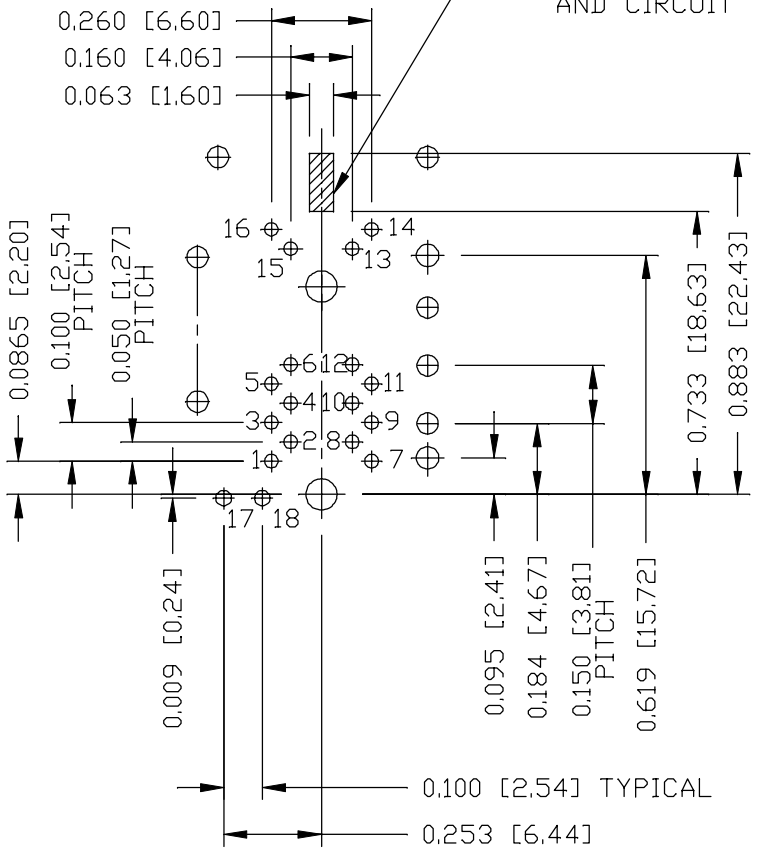

DETAIL A

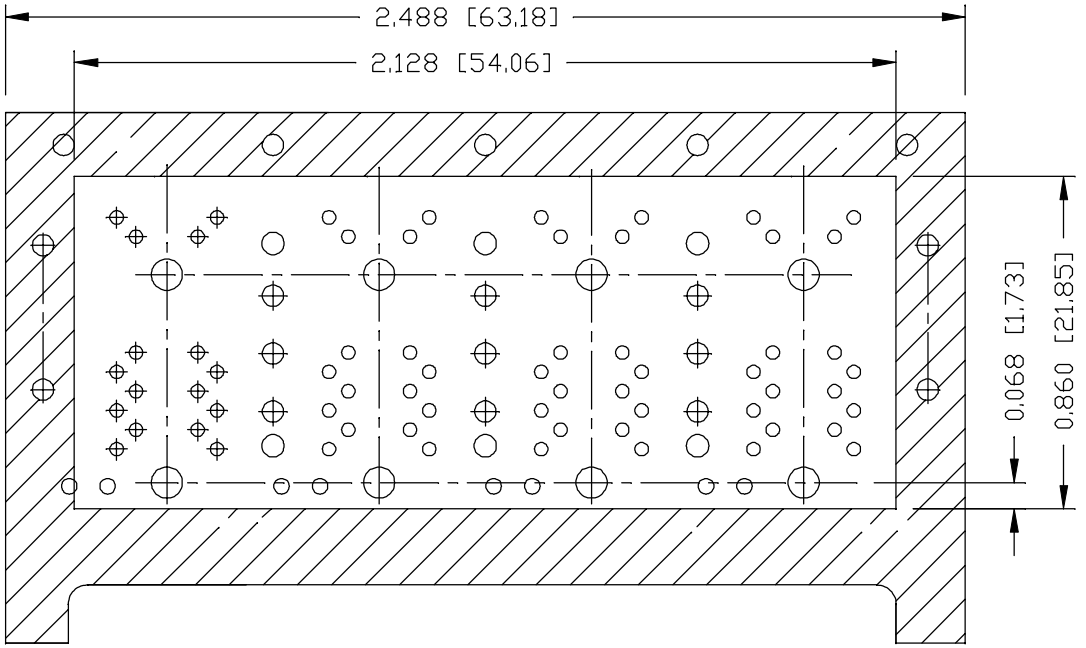

NOTES:

THE SHADED AREA ON THE CUSTOMER BOARD ARE RECOMMENDED TO BE CLEAR OFF ANY VIA HOLE OR COMPONENT PAD. (EXCEPT FOR GROUNDING OR LED LAYOUT)

ORIGINATED BY SANDY LIN DATE 2016-12-14	TITLE 1X4 10 gigabit MagJack® 4PPoE PATENTED G04-4N1A-125L	PART NO. / DRAWING NO. G04-4N1A125L	STANDARD DIM. TOL. IN INCH	[ ] METRIC DIM. AS REF.	REV. : PD / PAGE : 6
DRAWN BY XUE RIPING DATE 2016-12-14		FILE NAME G04-4N1A125L_PD.DWG	.X / .XX / .XXX ±0,004	UNIT : INCH [mm] SCALE : N/A SIZE : A4	bel MAGNETIC SOLUTIONS a bel group

This document is electronically generated. This is a controlled copy if used internally

THE INFORMATION CONTAINED HEREIN IS CONSIDERED "PROPRIETARY" TO BEL FUSE INC. AND SHALL NOT BE COPIED, REPRODUCED OR DISCLOSED WITHOUT THE WRITTEN APPROVAL OF BEL FUSE INC.

PRELIMINARY

RoHS

SUGGESTED PANEL OPENING

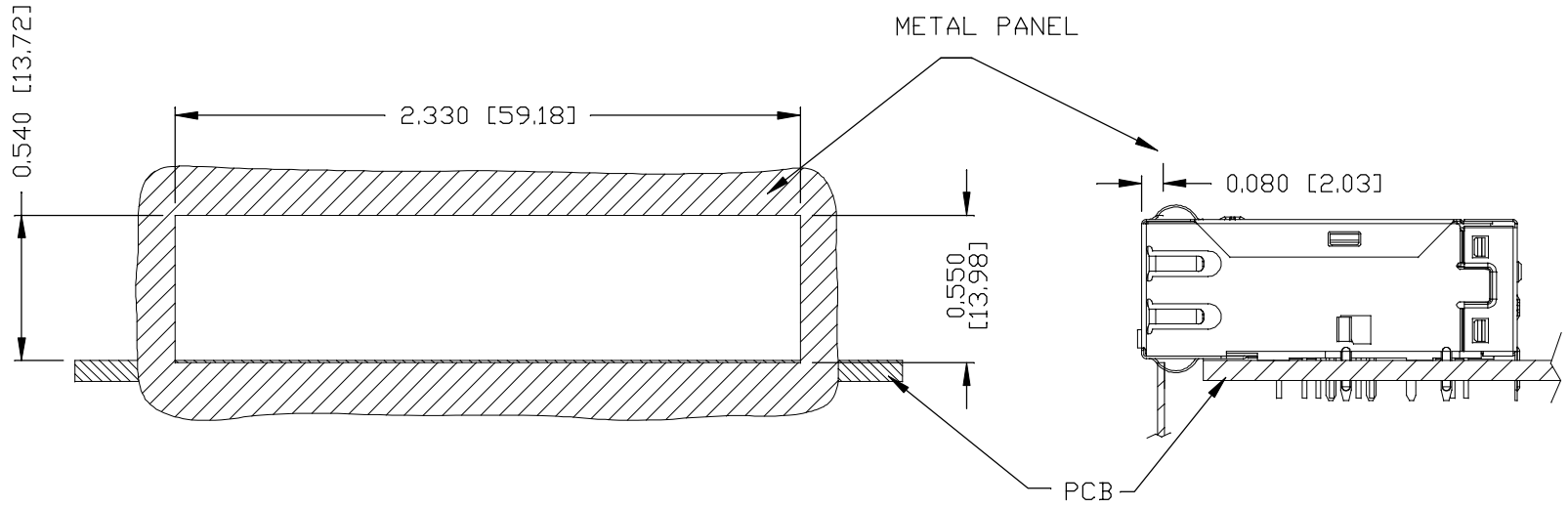

NOTE:

THE DISTANCE OF PANEL INSIDE SURFACE RELATIVE TO FRONT SURFACE OF PART IS ONLY A SUGGESTION. IN CASE THIS DISTANCE IS DIFFERENT, THE REQUIRED PANEL OPENING DIMENSIONS CHANGE ACCORDINGLY.

PACKING INFORMATION

PACKING TRAY: : 0200M9999-J9 (TOP)
0200M9999-J8 (BOTTOM)

PACKING QUANTITY : 16 PCS FINISHED GOODS PER TRAY
10 TRAYS (160 PCS FINISHED GOODS) PER CARTON BOX

NOTE : CARDBOARDS ARE PLACED BETWEEN LAYERS OF PACKING TRAY INSIDE CARTON BOX (INCLUDE THE UPPERMOST AND LOWERMOST TRAY)

REV. : PD	PAGE : 7				
ORIGINATED BY SANDY LIN DATE 2016-12-14	TITLE 1X4 10 gigabit MagJack® 4PPoE PATENTED G04-4N1A-125L	PART NO. / DRAWING NO. G04-4N1A125L	STANDARD DIM. TOL. IN INCH	[ ] METRIC DIM. AS REF.	bel MAGNETIC SOLUTIONS a bel group
DRAWN BY XUE RIPING DATE 2016-12-14		FILE NAME G04-4N1A125L_PD.DWG	.X .XX .XXX ±0.004	UNIT : INCH [mm] SCALE : N/A SIZE : A4	

This document is electronically generated. This is a controlled copy if used internally