THIS DRAWING AND THE SUBJECT MATTER SHOWN THEREON ARE CONFIDENTIAL AND THE PROPERTY OF BEL/STEWART/TRP CONNECTOR AND SHALL NOT BE REPRODUCED, COPIED, OR USED IN ANY MANNER WITHOUT THE WRITTEN CONSENT OF TRP CONNECTOR.

PRODUCT MAY BE PROTECTED BY ONE OR MORE OF THE FOLLOWING US PATENTS:
5736910 5939955 6425781 6428361 6554638 6840817 7123117
7429195 7717749 7808751 6217391 6149050 7924130

REVISIONS

P	LTR	DESCRIPTION	DATE	DWN	APVD
	1	SEE FINAL SHEET	29JAN2016	TR	TY

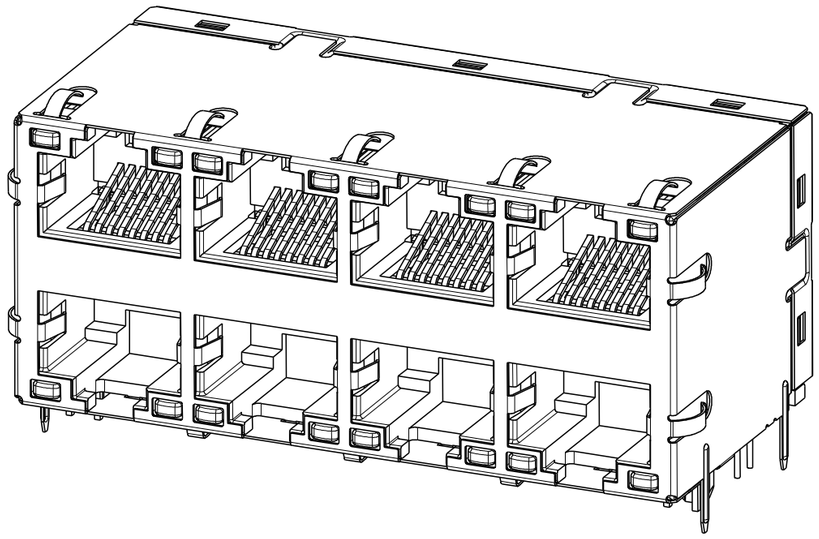

S8QT01 2.5G CIRCUIT 2 7

TOP AND BOTTOM PORTS

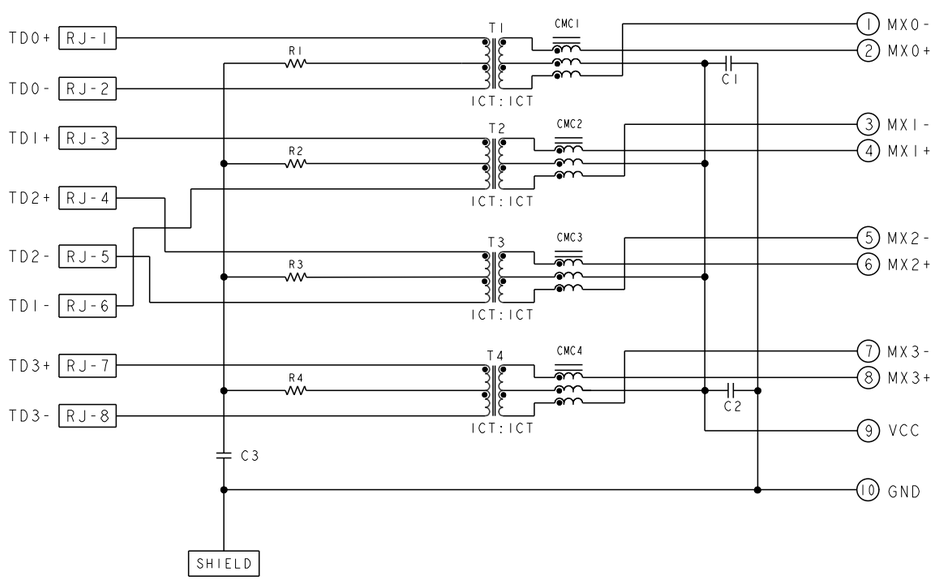

C1-C2 =10nF, 50V, X7R,CAPACITORS
C3 =1000pF, 2kV, CAPACITOR
R1-R4 =75 Ohms,1/16W,RESISTORS

1. MATERIALS:
PLASTIC HOUSING: BLACK, THERMOPLASTIC FLAMMABILITY RATING UL 94V-0
SHIELD: BRASS, PREPLATED WITH 0.76um MIN SEMI-BRIGHT NICKEL, POST DIPPED WITH 2.54um MIN SAC SOLDER OR PURE TIN SOLDER DIP ON SOLDER TAILS
CONTACTS: PHOSPHOR BRONZE, 1.27um MIN OVERALL NICKEL UNDERPLATE WITH SELECT 1.27um MIN GOLD AT MATING INTERFACE AND 2.54um MIN MATTE TIN ON SOLDER TAILS.
LED: DIFFUSED EPOXY LENS, CARBON STEEL LEAD FRAME TAILS OF LED ARE PREPLATED WITH 2.03um MIN SILVER OVER 1.02um MIN NICKEL UNDERPLATE OVER 1.02um MIN COPPER UNDERPLATE. POST-PLATED WITH 2.54um MIN MATTE TIN AND/OR SAC SOLDER DIP OR PURE TIN SOLDER DIP

2 MAGNETICS
APPLICATION: 2.5G BASE-T
IMPEDANCE: 100 OHMS
TURNS RATIO (CHIP:CABLE): 1:1 ALL FOUR PAIRS
OPEN CIRCUIT INDUCTANCE (OCL):
ALL CHANNELS 180uH MIN @ 100KHz, 0.1 VRMS WITH 8mA DC BIAS FROM 0°C TO 70°C,
ALL FOUR PAIRS BI-DIRECTIONAL
PERFORMANCE @ 25°C:
INSERTION LOSS (IL): 0.004*(f) + 0.4 MAX FROM 1MHz TO 150MHz
RETURN LOSS (RL): 20dB MIN FROM 1MHz TO 40MHz
20 - 15LOG10(f/40)dB MIN FROM 40.1MHz TO 150MHz
CROSSTALK ATTENUATION: 35dB MIN FROM 1MHz TO 40MHz
35 - 15LOG10(f/40)dB MIN FROM 40.1MHz TO 150MHz
COMMON MODE REJECTION: 25dB MIN FROM 1MHz TO 150MHz
ISOLATION VOLTAGE: 2250VDC(MAX) FOR 60 SECONDS WITH A RISE TIME OF 500V/SEC AND WITH ALL PORTS CONNECTED.

3 PART NUMBER, DATE CODE AND COUNTRY OF ORIGIN ARE LOCATED IN APPROXIMATE AREA SHOWN.
DATE CODE: YYWWD WHERE "YY" IS YEAR, "WW" IS WORK WEEK, "D" IS DAY OF WEEK, WITH SUNDAY =1

4 TRP CONNECTOR LOGO AND AGENCY APPROVAL LOGO ARE LOCATED IN APPROXIMATE AREA SHOWN.

5. OPERATING TEMP: FROM 0°C TO 70°C.

6. RJ45 CAVITY CONFORMS TO FCC RULES AND REGULATION PART 68 SUBPART F.

7 INDICATED MAGNETIC CONNECTIONS ARE SYMMETRICAL AND SUPPORT AUTO-MDI/MDIX.

8 DATUM AND BASIC DIMENSION ESTABLISHED BY CUSTOMER.

9 BASIC DIMENSION ESTABLISHED BY CUSTOMER, BUT MAY NOT BE GREATER THAN 5.08mm.

10 LEDS ARE DRIVEN WITH CONSTANT CURRENT AT APPROX 20mA
LED COLOR: DOMINANT WAVELENGTH (λD): GREEN 568 nm TYP. @ IF=20mA
FORWARD VOLTAGE (VF): GREEN 2.2V TYP. @ IF=20mA
DOMINANT WAVELENGTH (λD): ORANGE 605 nm TYP. @ IF=20mA
FORWARD VOLTAGE (VF): ORANGE 2.1V TYP. @ IF=20mA

11. THE PARTS ARE RECOMMENDED FOR WAVE SOLDERING PROCESS, PEAK TEMPERATURE 260°C MAX, 10 SECONDS MAX.

DESIGN PROPOSAL
CONTACT TRP FOR AVAILABILITY STATUS

3.04	GREEN/ORANGE	GREEN/ORANGE	GREEN/ORANGE	GREEN/ORANGE	2250376-1
DIM A	BOTTOM LED 2	BOTTOM LED 1	TOP LED 2	TOP LED 1	PART NUMBER

THIS DRAWING IS A CONTROLLED DOCUMENT. AND COMPLIANT TO ASME Y14.5M

DIMENSIONS: mm
TOLERANCES UNLESS OTHERWISE SPECIFIED:
0 PLC ±0.25
1 PLC ±0.25
2 PLC ±0.25
3 PLC ±
4 PLC ±
ANGLES ±

PRODUCT SPEC -
APPLICATION SPEC -

DWN 29JAN2016 RICK LI
CHK 29JAN2016 TOMMY REN/BILL LIU
APVD 29JAN2016 TONY YUAN

trp CONNECTOR a bel group DONGGUAN CHINA

MODEL NAME: MAGJACK STACK

DESC: 2X4 S8QT01 2.5G CIRCUIT, W/ LED

SIZE A1 | CAGE CODE | DRAWING NO C-2250376 | RESTRICTED TO

CUSTOMER DRAWING | SCALE NTS | SHEET 1 OF 5 | REV 1

Please read our datasheet & drawing disclaimer here.

© COPYRIGHT TRP connector ALL RIGHTS RESERVED

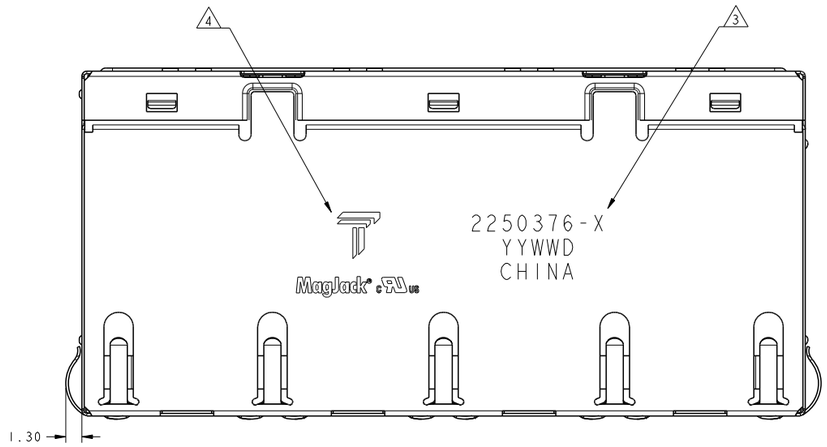

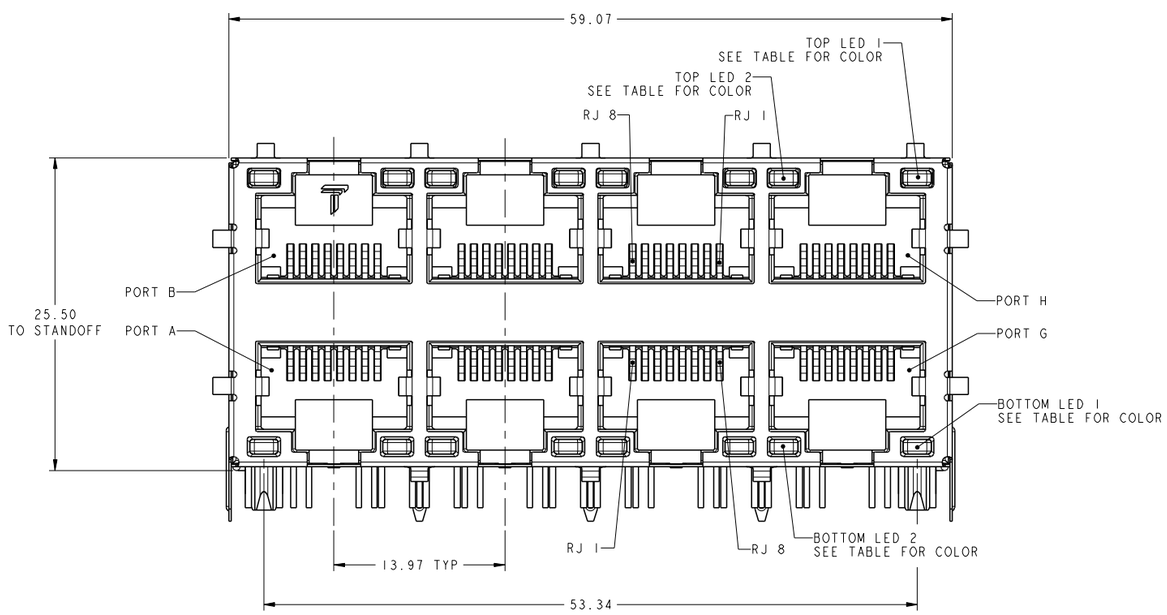

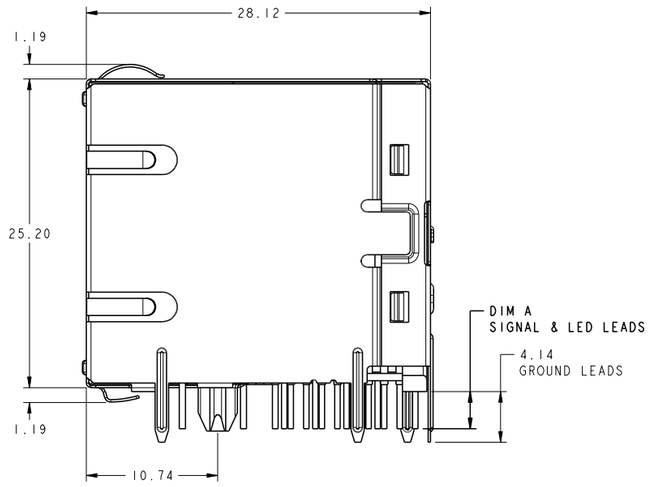

THIS DRAWING IS A CONTROLLED DOCUMENT. AND COMPLIANT TO ASME Y14.5M	DWN RICK LI 29JAN2016	trp CONNECTOR a bel group	DONGGUAN CHINA
DIMENSIONS: mm	CHK TOMMY REN/BILL LIU 29JAN2016		
TOLERANCES UNLESS OTHERWISE SPECIFIED: 0 PLC ±0.25; 1 PLC ±0.25; 2 PLC ±0.25; 3 PLC ±; 4 PLC ±; ANGLES ±;	APVD TONY YUAN 29JAN2016	DESC 2X4 S8QT01 2.5G CIRCUIT, W/ LED	
PRODUCT SPEC -	APPLICATION SPEC -	MODEL NAME MAGJACK STACK	SIZE A1 / CAGE CODE / DRAWING NO C-2250376 / RESTRICTED TO
CUSTOMER DRAWING	SCALE NTS	SHEET 2 OF 5	REV 1

© COPYRIGHT TRP connector ALL RIGHTS RESERVED

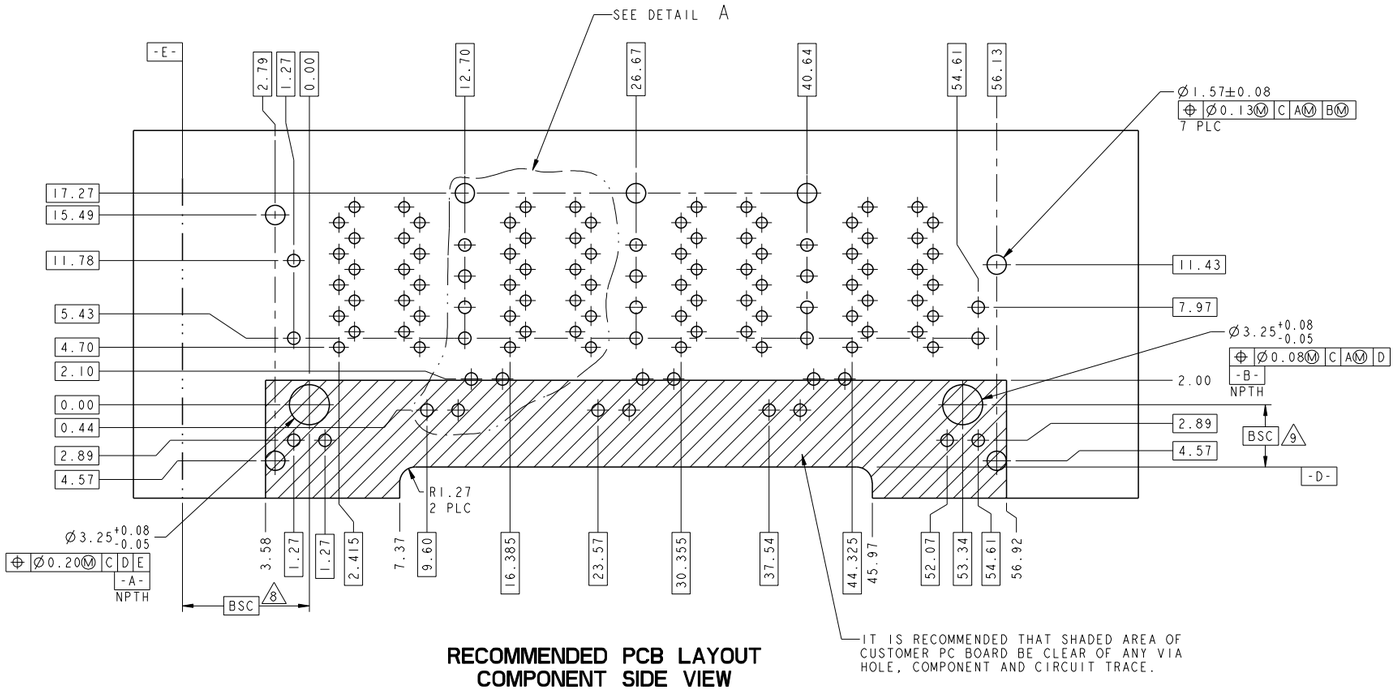

RECOMMENDED PCB LAYOUT
COMPONENT SIDE VIEW

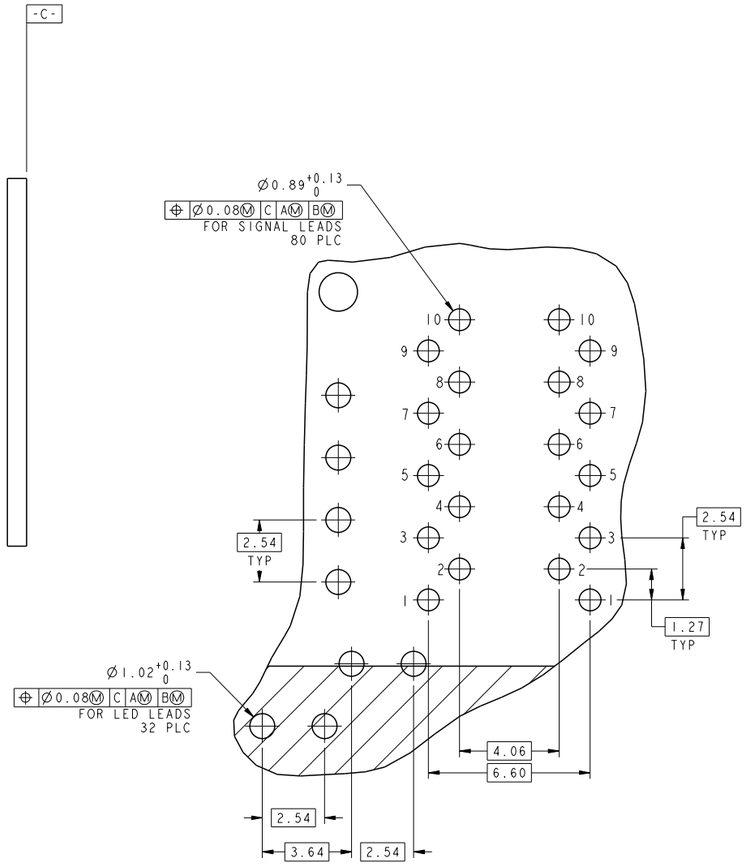

DETAIL A
SCALE 8:1

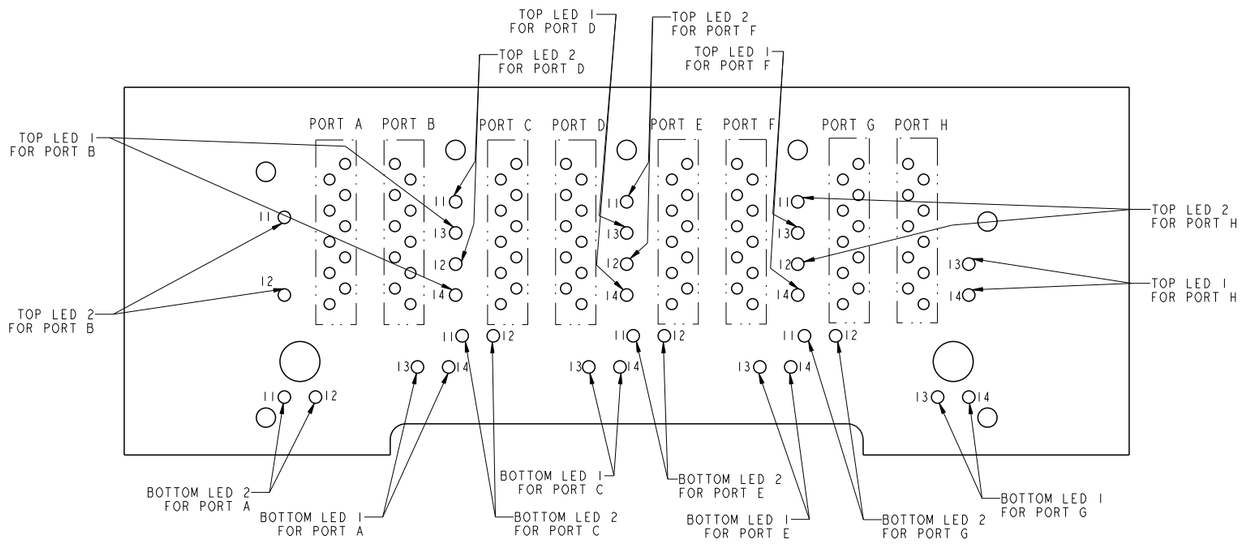

PORT ASSIGNMENT & LED HOLE DESIGNATIONS
COMPONENT SIDE VIEW

BI-COLOR LED 10

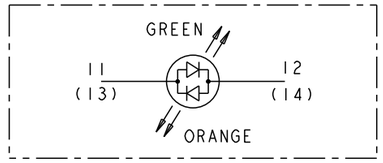

THIS DRAWING IS A CONTROLLED DOCUMENT, AND COMPLIANT TO ASME Y14.5M	DWN RICK LI 29JAN2016	trp CONNECTOR a bel group	DONGGUAN CHINA
DIMENSIONS: mm	CHK TOMMY REN/BILL LIU 29JAN2016		
TOLERANCES UNLESS OTHERWISE SPECIFIED: 0 PLC ±0.25; 1 PLC ±0.25; 2 PLC ±0.25; 3 PLC ±; 4 PLC ±; ANGLES ±; APPLICATION SPEC -	APVD TONY YUAN 29JAN2016	MODEL NAME MAGJACK STACK	DESC 2X4 S8QT01 2.5G CIRCUIT, W/ LED
PRODUCT SPEC -		SIZE A1 / CAGE CODE / DRAWING NO C-2250376	RESTRICTED TO
CUSTOMER DRAWING		SCALE NTS / SHEET 3 OF 5	REV I

© COPYRIGHT TRP connector ALL RIGHTS RESERVED

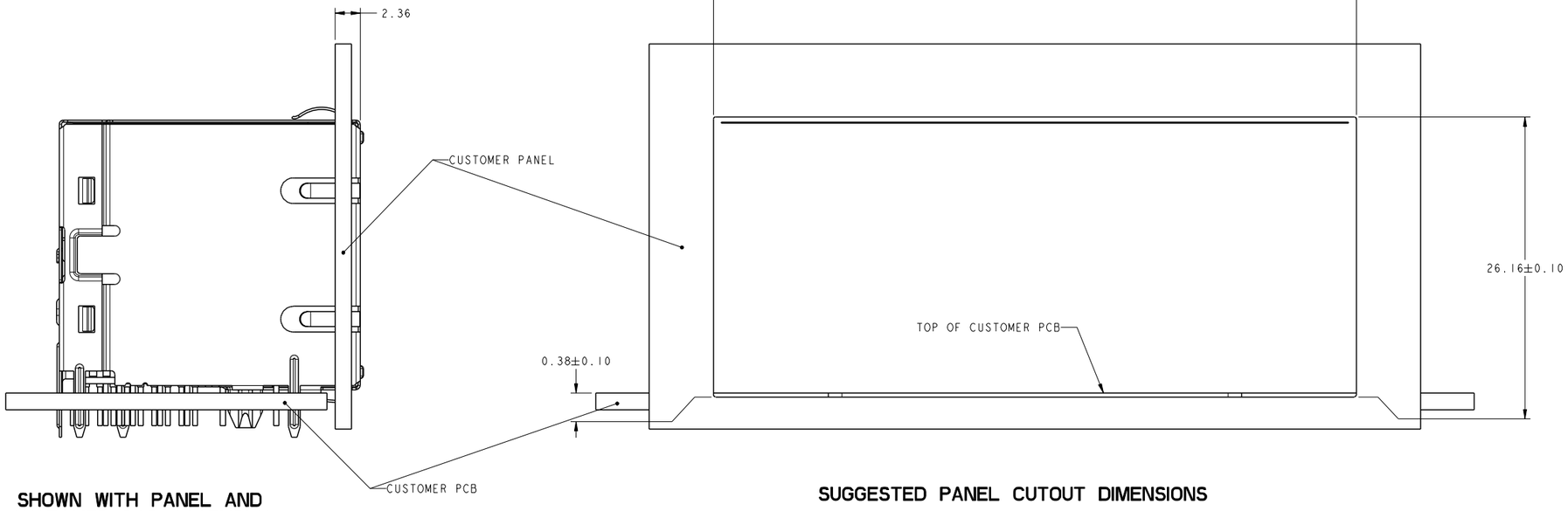

SHOWN WITH PANEL AND CUSTOMER PCB ASSEMBLY

SUGGESTED PANEL CUTOUT DIMENSIONS

THIS DRAWING IS A CONTROLLED DOCUMENT. AND COMPLIANT TO ASME Y14.5M		DWN 29JAN2016 RICK LI	trp CONNECTOR a bel group — DONGGUAN CHINA
DIMENSIONS: mm	TOLERANCES UNLESS OTHERWISE SPECIFIED: 0 PLC ±0.25; 1 PLC ±0.25; 2 PLC ±0.25; 3 PLC ±; 4 PLC ±; ANGLES ±·	CHK 29JAN2016 TOMMY REN/BILL LIU	
		APVD 29JAN2016 TONY YUAN	
PRODUCT SPEC -	APPLICATION SPEC -	MODEL NAME MAGJACK STACK	DESC 2X4 S8QT01 2.5G CIRCUIT, W/ LED
		SIZE A1 · CAGE CODE · DRAWING NO C-2250376 · RESTRICTED TO	
CUSTOMER DRAWING		SCALE NTS · SHEET 4 OF 5 · REV I	

© COPYRIGHT TRP connector ALL RIGHTS RESERVED

2250376					STOCK DISPOSITION			
2X4 S8QT01 2.5G CIRCUIT, W/ LED					A: CONTINUE AS IS B: REWORK C: SCRAP		D: USE OLD FIRST E: PARTS TO CONFORM F: OTHER	
REVISION HISTORY								
DATE	REV	CHANGES	REASON	APPROVAL	INVENTORY (A,B,C,D,E,F)	WORK IN PROCESS (A,B,C,F)	SUPPLIER ORDERS (A,E,F)	OPEN CUST ORDERS (A,E,F)
29JAN2016	I	-	INITIAL RELEASE	TY	-	-	-	-

THIS DRAWING IS A CONTROLLED DOCUMENT.
AND COMPLIANT TO ASME Y14.5M

DIMENSIONS: mm

TOLERANCES UNLESS OTHERWISE SPECIFIED:
0 PLC ±0.25
1 PLC ±0.25
2 PLC ±0.25
3 PLC ±.
4 PLC ±.
ANGLES ±.

PRODUCT SPEC -

APPLICATION SPEC -

DWN RICK LI 29JAN2016
CHK TOMMY REN/BILL LIU 29JAN2016
APVD TONY YUAN 29JAN2016

trp CONNECTOR a bel group
DONGGUAN CHINA

MODEL NAME: MAGJACK STACK

DESC: 2X4 S8QT01 2.5G CIRCUIT, W/ LED

SIZE A1 | CAGE CODE | DRAWING NO ©-2250376 | RESTRICTED TO

CUSTOMER DRAWING | SCALE NTS | SHEET 5 OF 5 | REV I

*****