Chassis Mount

# A41-L Series

## All-4-One™ International Transformers with Lead Wires

## International Standards at Lower Cost and Better Performance

Designed to provide the high isolation, creepage and clearance necessary to comply with international safety standards.

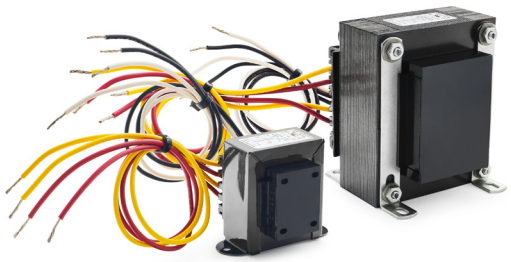

### General Specifications

- Power - 25 VA to 175 VA
- Dielectric Strength - 4000 Vrms Hipot
- Primaries - Dual primaries (115/230 V - 50/60 Hz)
- Dual Secondaries - Series or parallel
- Terminals - Solder lug / quick connect type terminals
- Leakage - Current meets UL 60601-1, IEC/EN 60601-1
- Insulation - Class F (155° C)
- Flammability Rating - Bobbin and shroud material meet UL 94-V0

### Agency Certifications

- UL 1446 UL File # E66312
- UL recognized to UL 506 / UL 5085-2, File # E63829
- CSA certified to C22.2 No 66.1, File # 221070
- VDE certified to VDE 0868 / EN 62368, File # 1448
- CE Compliance VDE Declaration of Conformity LVD 2014/35/EU

### Lead Wires

- Hook up lead wire style UL1015, CSA TEW
- Rated 600 V -40° to +105° C
- Passes UL VW-1 (flame test)
- All primary lead wires are 18 AWG UL 1015
- All lead wires are 12” in length

signal TRANSFORMER
a bel group

belfuse.com/signal

Please read our datasheet & drawing disclaimer here.

## Part Number Selection

| Part Number | VA | Secondary RMS Rating | | Lead Wire Gauge |
|---|---|---|---|---|
| | Size | Series | Parallel | Secondary |
| A41-25-10L | 25 | 10.0 VCT @ 2.5 A | 5.0 V @ 5.0 A | 18 AWG |
| A41-43-10L | 43 | 10.0 VCT @ 4.3 A | 5.0 V @ 8.6 A | 18 AWG |
| A41-80-10L | 80 | 10.0 VCT @ 8.0 A | 5.0 V @ 16.0 A | 18 AWG |
| A41-130-10L | 130 | 10.0 VCT @ 13.0 A | 5.0 V @ 26.0 A | 16 AWG |
| A41-175-10L | 175 | 10.0 VCT @ 17.5 A | 5.0 V @ 35.0 A | 16 AWG |
| A41-25-12L | 25 | 12.6 VCT @ 2.0 A | 6.3 V @ 4.0 A | 18 AWG |
| A41-43-12L | 43 | 12.6 VCT @ 3.4 A | 6.3 V @ 6.8 A | 18 AWG |
| A41-80-12L | 80 | 12.6 VCT @ 6.3 A | 6.3 V @ 12.6 A | 18 AWG |
| A41-130-12L | 130 | 12.6 VCT @ 10.3 A | 6.3 V @ 20.6 A | 16 AWG |
| A41-175-12L | 175 | 12.6 VCT @ 14.0 A | 6.3 V @ 28.0 A | 16 AWG |
| A41-25-16L | 25 | 16.0 VCT @ 1.6 A | 8.0 V @ 3.2 A | 18 AWG |
| A41-43-16L | 43 | 16.0 VCT @ 2.7 A | 8.0 V @ 5.4 A | 18 AWG |
| A41-80-16L | 80 | 16.0 VCT @ 5.0 A | 8.0 V @ 10.0 A | 18 AWG |
| A41-130-16L | 130 | 16.0 VCT @ 8.1 A | 8.0 V @ 16.2 A | 16 AWG |
| A41-175-16L | 175 | 16.0 VCT @ 11.0 A | 8.0 V @ 22.0 A | 16 AWG |
| A41-25-20L | 25 | 20.0 VCT @ 1.25 A | 10 V @ 2.5 A | 18 AWG |
| A41-43-20L | 43 | 20.0 VCT @ 2.2 A | 10 V @ 4.4 A | 18 AWG |
| A41-80-20L | 80 | 20.0 VCT @ 4.0 A | 10 V @ 8.0 A | 18 AWG |
| A41-130-20L | 130 | 20.0 VCT @ 6.5 A | 10 V @ 13.0 A | 16 AWG |
| A41-175-20L | 175 | 20.0 VCT @ 8.8 A | 10 V @ 17.6 A | 16 AWG |

| Part Number | VA | Secondary RMS Rating | | Lead Wire Gauge |
|---|---|---|---|---|
| | Size | Series | Parallel | Secondary |
| A41-25-24L | 25 | 24 VCT @ 1.0 A | 12 V @ 2.0 A | 18 AWG |
| A41-43-24L | 43 | 24 VCT @ 1.8 A | 12 V @ 3.6 A | 18 AWG |
| A41-80-24L | 80 | 24 VCT @ 3.3 A | 12 V @ 6.6 A | 18 AWG |
| A41-130-24L | 130 | 24 VCT @ 5.4 A | 12 V @ 10.8 A | 16 AWG |
| A41-175-24L | 175 | 24 VCT @ 7.3 A | 12 V @ 14.6 A | 16 AWG |
| A41-25-28L | 25 | 28 VCT @ 0.9 A | 14 V @ 1.86 A | 18 AWG |
| A41-43-28L | 43 | 28 VCT @ 1.5 A | 14 V @ 3.0 A | 18 AWG |
| A41-80-28L | 80 | 28 VCT @ 2.8 A | 14 V @ 5.6 A | 18 AWG |
| A41-130-28L | 130 | 28 VCT @ 4.6 A | 14 V @ 9.2 A | 16 AWG |
| A41-175-28L | 175 | 28 VCT @ 6.25 A | 14 V @ 12.5 A | 16 AWG |
| A41-25-36L | 25 | 36 VCT @ 0.7 A | 18 V @ 1.4 A | 18 AWG |
| A41-43-36L | 43 | 36 VCT @ 1.2 A | 18 V @ 2.4 A | 18 AWG |
| A41-80-36L | 80 | 36 VCT @ 2.2 A | 18 V @ 4.4 A | 18 AWG |
| A41-130-36L | 130 | 36 VCT @ 3.6 A | 18 V @ 7.2 A | 18 AWG |
| A41-175-36L | 175 | 36 VCT @ 4.8 A | 18 V @ 9.6 A | 16 AWG |
| A41-25-230L | 25 | 230 VCT @ 0.11 A | 115 V @ 0.22 A | 18 AWG |
| A41-43-230L | 43 | 230 VCT @ 0.19 A | 115 V @ 0.38 A | 18 AWG |
| A41-80-230L | 80 | 230 VCT @ 0.35 A | 115 V @ 0.7 A | 18 AWG |
| A41-130-230L | 130 | 230 VCT @ 0.57 A | 115 V @ 1.14 A | 18 AWG |
| A41-175-230L | 175 | 230 VCT @ 0.76 A | 115 V @ 1.52 A | 18 AWG |

**Custom versions available upon request.**

signal TRANSFORMER
a bel group

128 Atlantic Avenue, Lynbrook, NY 11563
Toll Free 866-239-5777 | Tel 516-239-5777 | Fax 516-239-7208
sales@signaltransformer.com | techhelp@signaltransformer.com
belfuse.com/signal

© 2021 Signal Transformer

## Mechanical Specifications

| VA | Mechanical Dimensions | | | | | Lead Wire Length | Mounting Style | Mounting Dimensions | | Mounting Screw | Weight |
|---|---|---|---|---|---|---|---|---|---|---|---|
| | L | W | H | A | B | Standard | | ML | MW | | |
| Size | Inches (mm) | | | | | Inches (mm) | | | | | lbs (kg) |
| 25 | 2.81 (71.4) | 2.14 (54.4) | 2.31 (58.7) | 2.00 (50.8) | 1.12 (28.6) | 12.0 (304.8) | C | 2.37 (60.3) | — | #6 | 1.25 (0.57) |
| 43 | 3.12 (79.4) | 2.14 (54.4) | 2.68 (68.2) | 2.25 (57.2) | 1.12 (28.6) | 12.0 (304.8) | C | 2.81 (71.4) | — | #6 | 1.6 (0.73) |
| 80 | 2.50 (63.5) | 2.52 (64.3) | 3.06 (77.7) | — | 1.37 (35.0) | 12.0 (304.8) | B | 2.00 (50.8) | 2.25 (57.2) | #6 | 2.8 (1.27) |
| 130 | 2.81 (71.4) | 3.00 (76.2) | 3.37 (85.7) | — | 1.62 (41.3) | 12.0 (304.8) | B | 2.25 (57.2) | 2.50 (63.5) | #8 | 4.1 (1.86) |
| 175 | 3.12 (79.4) | 3.14 (79.7) | 3.75 (95.3) | — | 1.62 (41.3) | 12.0 (304.8) | B | 2.50 (63.5) | 2.50 (63.5) | #8 | 5.5 (2.49) |

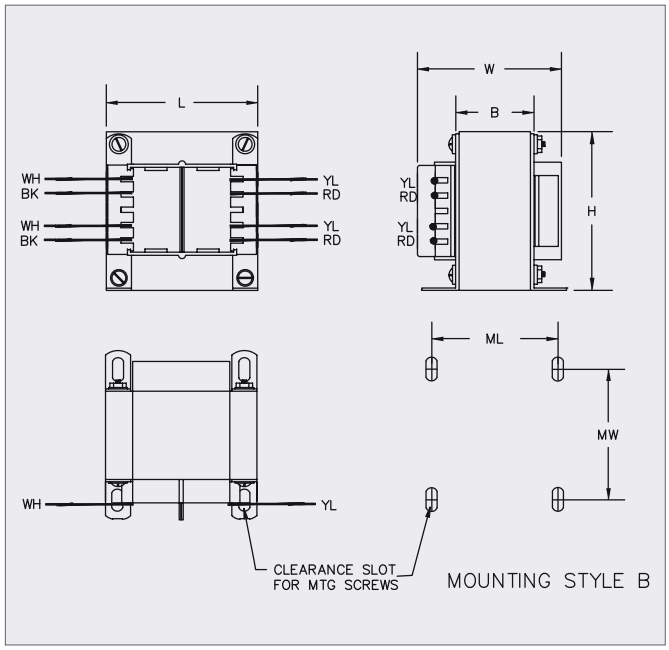


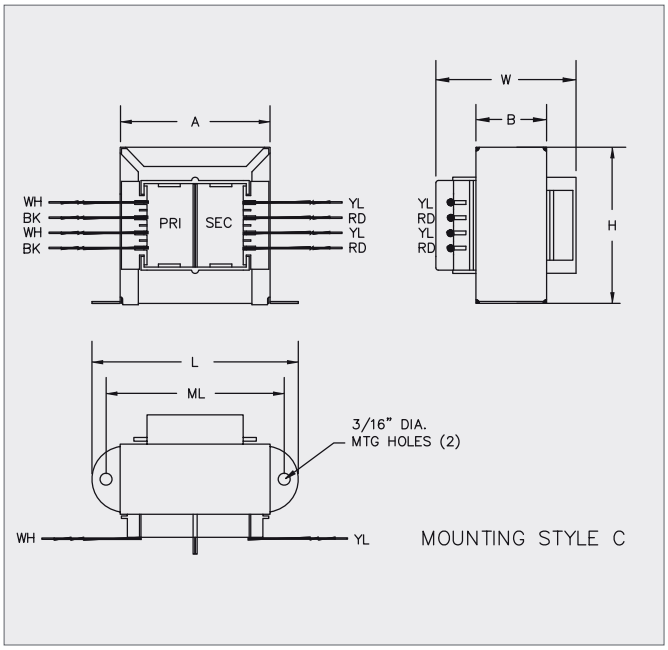


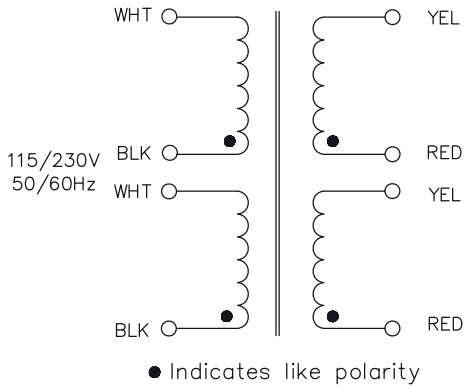


**Custom versions available upon request.**

128 Atlantic Avenue, Lynbrook, NY 11563
Toll Free 866-239-5777 | Tel 516-239-5777 | Fax 516-239-7208
sales@signaltransformer.com | techhelp@signaltransformer.com
belfuse.com/signal

© 2021 Signal Transformer Specifications subject to change without notice 