SERIES: PSK-15E | DESCRIPTION: INTERNAL AC-DC POWER SUPPLY

FEATURES

- universal input 85~305 Vac & 100~430 Vdc
- wide operating temperature range (-40~85°C)
- Class B emissions (EN55032/CISPR) with application circuit
- certified to IEC/EN/UL 62368-1
- isolation voltage 4,000 Vac
- short circuit and over current protection
- Class II
- low stand-by power consumption (<0.05 W)
- 2,000 m operating altitude
- high efficiency up to 86%
- OVC III

MODEL

MODEL	output voltage (Vdc)	output current max (A)	output power max (W)	ripple and noise[1] max (mVp-p)	efficiency[2] typ (%)
PSK-15E-3	3.3	4.0	13.2	120	82
PSK-15E-5	5	3.0	15.0	120	86
PSK-15E-9	9	1.67	15.0	120	84
PSK-15E-12	12	1.25	15.0	120	85
PSK-15E-15	15	1.0	15.0	120	84
PSK-15E-24	24	0.625	15.0	120	86

Notes:
1. Ripple & noise are measured at 20 MHz BW, with 10μF electrolytic capacitor and 1μF ceramic capacitor.
2. It is recommended to use at a load of over 5%. If the load is below 5%, the ripple index of the product may exceed the specifications, but it does not affect the reliability of the product.
3. Unless otherwise specified, all indicators in this manual are measured at Ta=25 °C, humidity<75% RH, nominal input voltage, and output rated load.

PART NUMBER KEY

PSK - 15E - XX

Base Number — Output Voltage

INPUT

parameter	conditions/description	min	typ	max	units
voltage[4]	ac input dc input	85 100		305 430	Vac Vdc
frequency		47	50~60	63	Hz
current	115 Vac 230 Vac			0.45 0.3	A A
insrush current	115 Vac 230 Vac		30 60		A A
external input fuse	2 A/300 V, slow-blow, required				
leakage current	230 Vac/50 Hz			0.1	mA
no load power consumption	at 230 Vac		0.05	0.12	W

Notes: 4. The input voltage should not exceed the specified range value to prevent permanent and irreparable damage.

OUTPUT

parameter	conditions/description	min	typ	max	units
capacitive load	3.3 Vdc output model 5 Vdc output model 9 Vdc output model 12 Vdc output model 15 Vdc output model 24 Vdc output model			6,600 5,000 3,000 2,000 1,500 680	µF µF µF µF µF µF
output voltage accuracy			±2		%
line regulation			±0.5		%
load regulation	0% ~ 100% load		±1.0		%
hold-up time	at 230 Vac		56		ms
temperature coefficient			±0.02		%/°C

PROTECTIONS

parameter	conditions/description	min	typ	max	units
over current protection		110			%
short circuit protection	continuous, auto recovery				

SAFETY & COMPLIANCE

parameter	conditions/description	min	typ	max	units
isolation voltage	input to output, for 1 minute, 5mA max	4,000			Vac
safety approvals	certified to 62368-1: IEC, EN, UL designed to meet 61558: EN designed to meet 60335: EN				
safety class	Class II				
EMI/EMC	CISPR32/EN55032 CLASS B (see recommended circuit Fig. 2)				
ESD	IEC/EN61000-4-2 Contact ±6 kV/Air ±8 kV, perf. Criteria B				
radiated immunity	IEC/EN61000-4-3 10 V/m, perf. Criteria A				
EFT/burst	IEC/EN61000-4-4 ±4 kV (see recommended circuit Fig. 2), perf. Criteria A				
surge	IEC/EN61000-4-5 line to line ±1 kV, perf. Criteria B IEC/EN61000-4-5 line to line ±2 kV, (see recommended circuit Fig. 2), perf. Criteria A				
conducted immunity	IEC/EN61000-4-6 10 Vrms, perf. Criteria A				
MTBF	MIL-HDBK-217F at 25°C	3,200,000			hours
RoHS	yes				

ENVIRONMENTAL

parameter	conditions/description	min	typ	max	units
operating temperature		-40		85	°C
storage temperature		-40		85	°C
storage humidity	non-condensing	0		95	%

SOLDERABILITY

parameter	conditions/description	min	typ	max	units
wave soldering	5~10 seconds max	255	260	265	°C
hand soldering	5~10 seconds max	355	360	365	°C

MECHANICAL

parameter	conditions/description	min	typ	max	units
dimensions	45.70 x 25.40 x 21.50 [1.799 x 1.000 x 0.846 inch]				mm
weight			39.6		g
case material	black plastic, flame-retardant and heat-resistant (UL94V-0)				
cooling	natural convection				

MECHANICAL DRAWING

units: mm [inch]
pin diameter tolerance: ±0.10 [±0.004]
tolerance: ±0.50 [±0.020]

PIN CONNECTIONS	
PIN	Function
1	AC(N)
2	AC(L)
3	no pin
4	+Vo
5	-Vo

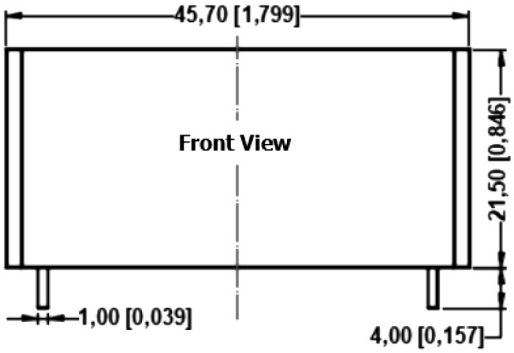

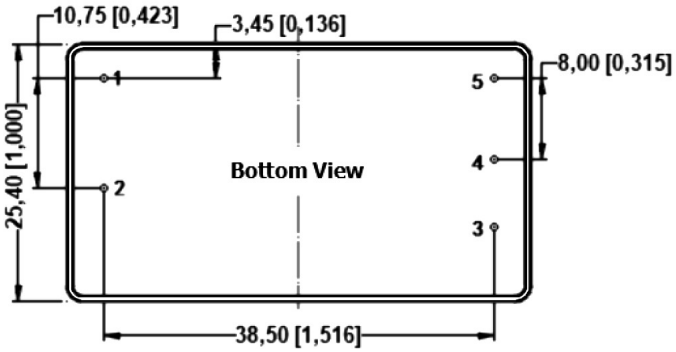

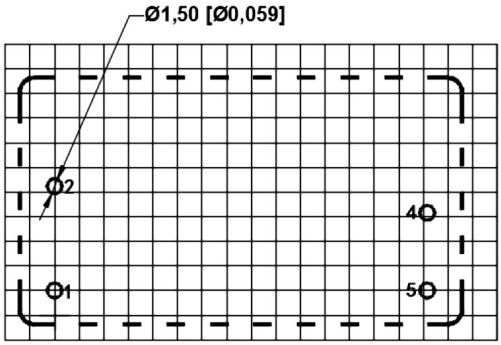

Grid size：2.54 x 2.54mm

DERATING CURVE

TEMPERATURE DERATING CURVE
(Input voltage = 85 ~ 305 Vac / 100 ~ 430 Vdc)

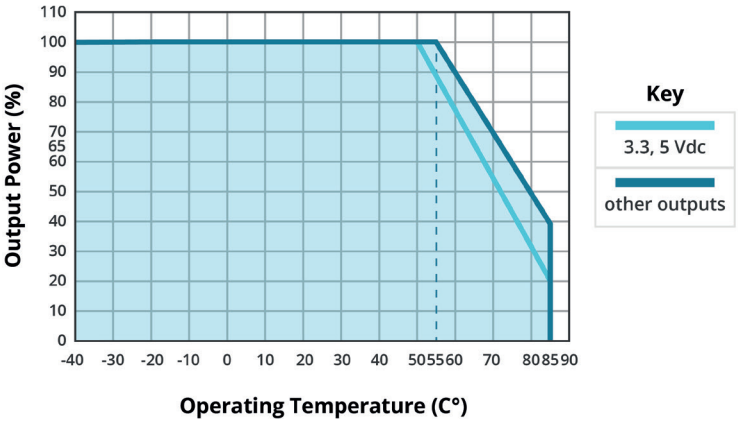

INPUT VOLTAGE DERATING CURVE
(at 25°C)

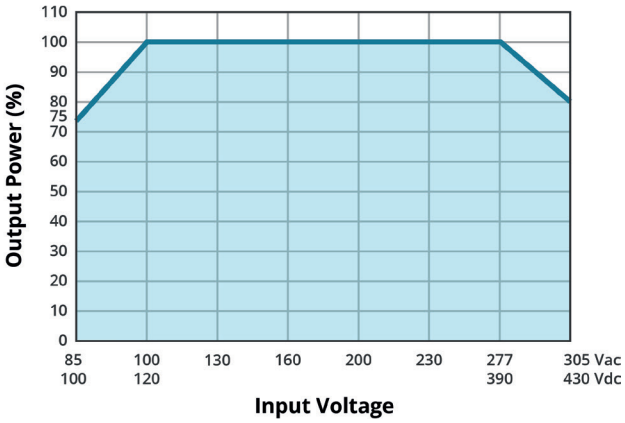

EFFICIENCY CURVES

EFFICIENCY VS INPUT VOLTAGE
(Full load)

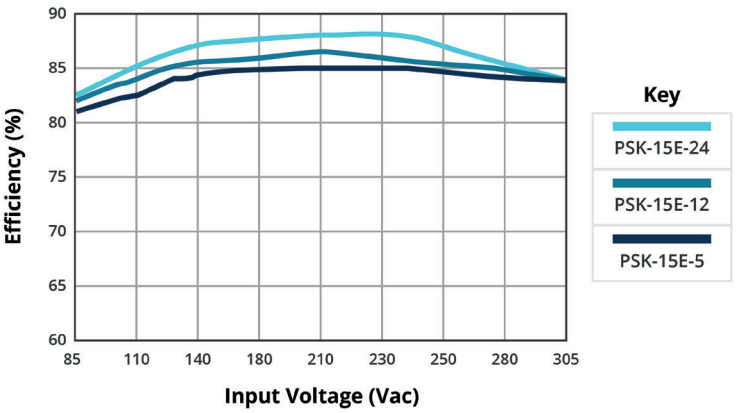

EFFICIENCY VS OUTPUT LOAD
(Vin = 230 Vac)

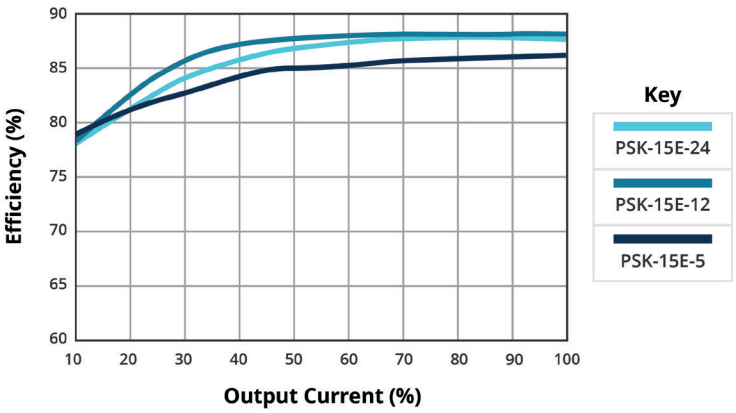

APPLICATION DESIGN REFERENCE

Figure 1

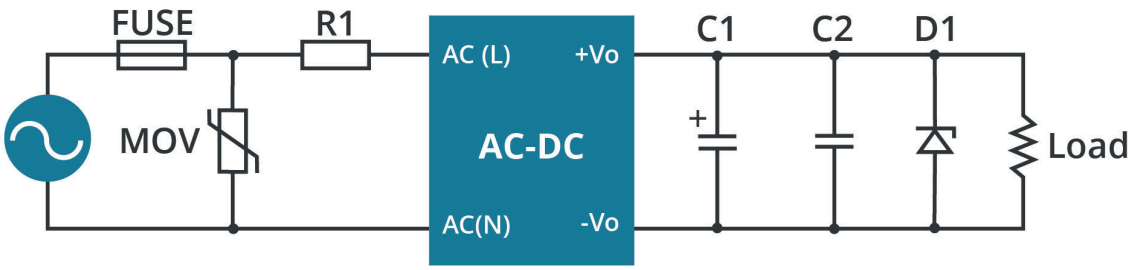

Table 1

Vout (Vdc)	FUSE	MOV	R1	C1 (μF/V)	C2 (μF/V)	D1
5	2A/300V, slow-blow, required	10D561K	6.8Ω/3W (wire-wound resistor, required)	220 μF/16 V	1 μF/25 V	see note 2
9, 12				100 μF/25 V	1 μF/25 V	
15, 24				100 μF/35 V	1 μF/50 V	

Notes: 1. Fuse and MOV should be selected based on application requirements and performance criteria.
2. D1 is a TVS transistor that can protect the downstream circuit in case of module abnormalities. It is recommended to choose a model that is 1.2 times the output voltage.

EMC RECOMMENDED CIRCUIT

Figure 2

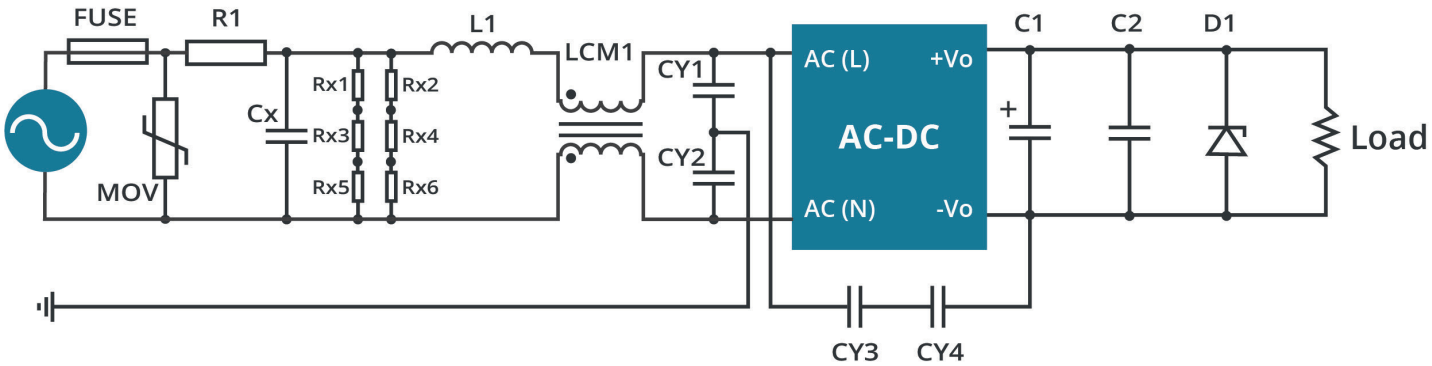

Table 2

Components	Recommended Value
FUSE	2A/300V, slow-blow, required
MOV	10D561K
R1	6.8Ω/3W (wire wound resistor, required)
Cx	0.33 μF/305 Vac
L1	1.2 mH/0.5 A
CY1, CY2	2.2 nF/400 Vac
CY3, CY4	1.0 nF/400 Vac
LCM	20 mH Common mode inductance
Rx1, Rx2, Rx3, Rx4, Rx5, Rx6	1.5 MΩ/1206

REVISION HISTORY

rev.	description	date
1.0	initial release	05/21/2025

The revision history provided is for informational purposes only and is believed to be accurate.

CUI INC
a bel group

15575 SW Sequoia Pkwy #100
Portland, OR 97224
800.275.4899

Fax 503.612.2383
Belfuse.com
Tech.Support@psbel.com

CUI offers a two (2) year limited warranty. Complete warranty information is listed on our website.

CUI reserves the right to make changes to the product at any time without notice. Information provided by CUI is believed to be accurate and reliable. However, no responsibility is assumed by CUI for its use, nor for any infringements of patents or other rights of third parties which may result from its use.

CUI products are not authorized or warranted for use as critical components in equipment that requires an extremely high level of reliability. A critical component is any component of a life support device or system whose failure to perform can be reasonably expected to cause the failure of the life support device or system, or to affect its safety or effectiveness.