NON-ISOLATED DC/DC CONVERTERS

2.4 Vdc - 5.5 Vdc Input, 0.6 Vdc - 3.63 Vdc /3 A Output

Jul. 17 2015

Bel Power Inc., a subsidiary of Bel Fuse Inc.

SLIN-03F2Ax RoHS Compliant Rev.E

Features

- Wide Input Voltage Range
- Output Voltage Programmable
- Fixed Switching Frequency
- Remote On/Off
- Remote Sense
- Over Temperature Protection
- Output Over Current Protection
- Ability to Sink and Source Current
- Cost Efficient Open Frame Design
- Tunable Loop™ to Optimize Dynamic output voltage response
- Compliant to IPC-9592 (September 2008), Category 2, Class II
- Compliant to RoHS EU Directive 2002/95/EC
- Certificated to UL60950-1/CSA C22.2 No.60950-1, 2rd
- *VDE* 0805:2001-12 (EN60950-1) Licensed

Applications

- Distributed power architectures
- Intermediate bus voltage applications
- Telecommunications equipment
- Servers and storage applications
- Networking equipment
- Industrial equipment

Description

The SLIN-03F2Ax power modules are non-isolated dc/dc converters that can deliver up to 3A of output current. These modules operate over a wide range of input voltage (V_{IN} = 2.4Vdc-5.5Vdc) and provide a precisely regulated output voltage from 0.6Vdc to 3.63Vdc, programmable via an external resistor. Features include remote On/Off, adjustable output voltage, over current protection, and over temperature protection. A new feature, the Tunable Loop™, allows the user to optimize the dynamic response of the converter to match the load with reduced amount of output capacitance leading to savings on cost and PWB area.

Part Selection

Output Voltage	Input Voltage	Max. Output Current	Typical Efficiency	Model Number Active High	Model Number Active Low
0.6 Vdc – 3.63 Vdc	2.4 Vdc - 5.5 Vdc	3 A	91%	SLIN-03F2A0	SLIN-03F2AL

Notes: 1. Add "R" suffix at the end of the model number to indicate tape and reel packaging (Standard).
2. Add "G" suffix at the end of the model number to indicate tray packaging (Option).

Ordering Part Number

S LIN – 03 F 2A 0 x
1 2 3 4 5 6 7

1---Surface mount
2---Series code
3---Output current (3A)
4--- Wide input voltage range (2.4-5.5V)
5--- Without sequencing
6--- Enable, active high, change "0" to "L" means active low
7--- Package

Please read our datasheet & drawing disclaimer here.

Absolute Maximum Ratings

Parameter	Min	Typ	Max	Unit	Notes
Continuous Input Voltage	-0.3	-	6	V	
Operating Ambient Temperature	-40	-	85	°C	
Storage Temperature	-55	-	125	°C	
Altitude	-	-	2000	m	

Note: Stresses in excess of the absolute maximum ratings can cause permanent damage to the device. These are absolute stress ratings only, functional operation of the device is not implied at these or any other conditions in excess of those given in the operations sections of the data sheet. Exposure to absolute maximum ratings for extended periods can adversely affect the device reliability.

Input Specifications

Parameter	Min	Typ	Max	Unit	Notes
Operating Input Voltage	2.4	-	5.5	V	
Input Current (full load)	-	-	3.5	A	V_{IN}=2.4V to 5.5V, I_O=$I_{O, max}$
Input Current (no load)	-	26	-	mA	V_{IN}=5.0V, Vo=0.6V, I_O=0, module enabled
	-	75	-	mA	V_{IN}=5.0V, Vo=3.3V, I_O=0, module enabled
Input Stand-by Current	-	2.1	-	mA	V_{IN} = 5V, module disabled
Input Reflected Ripple Current (pk-pk)	-	25	-	mA	5Hz to 20MHz, 1uH source impedance; V_{IN} =0 to 5.5V, I_O= I_{Omax}
I^2t Inrush Current Transient	-	-	1	A^2s	
Input Ripple Rejection (120Hz)	-	40	-	dB	
Turn-on Threshold	-	-	2.2	V	
Turn-off Threshold	1.75	-	-	V	
Hysteresis	0.08	-	0.2	V	

CAUTION: This converter is not internally fused. An input line fuse must be used in application.

This power module can be used in a wide variety of applications, ranging from simple standalone operation to an integrated part of sophisticated power architecture. To preserve maximum flexibility, internal fusing is not included; however, to achieve maximum safety and system protection, always use an input line fuse. The safety agencies require a fast-acting fuse with a maximum rating of 5A. Based on the information provided in this data sheet on inrush energy and maximum dc input current, the same type of fuse with a lower rating can be used. Refer to the fuse manufacturer's data sheet for further information.

Note: Unless otherwise indicated, specifications apply over all operating input voltage, resistive load, and temperature conditions.

Output Specifications

Parameter	Min	Typ	Max	Unit	Notes
Output Voltage Set Point	-1.5	-	+1.5	%Vo,set	with 0.5% tolerance for external resistor used to set output voltage
Output Voltage	-3.0	-	+3.0	%Vo,set	Over all operating input voltage, resistive load, and temperature conditions until end of life
Adjustment Range	0.6	-	3.63	V	selected by an external resistor
Remote Sense Range	-	-	0.5	V	
Output Regulation (for $V_O \geq 2.5$Vdc)	-	-	0.4	%Vo,set	Line Regulation, $V_{IN}=V_{IN, min}$ to $V_{IN, max}$
	-	-	10	mV	Load Regulation, $I_O=I_{O, min}$ to $I_{O, max}$
Output Regulation (for $V_O < 2.5$Vdc)	-	-	10	mV	Line Regulation, $V_{IN}=V_{IN, min}$ to $V_{IN, max}$
	-	-	5	mV	Load Regulation, $I_O=I_{O, min}$ to $I_{O, max}$
Temperature Regulation	-	-	0.4	%Vo,set	$T_{ref}=T_{A, min}$ to $T_{A, max}$
Ripple and Noise (pk-pk)	-	20	35	mV	5Hz to 20MHz BW, $V_{IN}=V_{IN, nom}$ and $I_O=I_{O, min}$ to $I_{O, max}$, Co = 0.1uF // 10 uF ceramic capacitors
Ripple and Noise (rms)	-	15	25	mV	
Output Current Range	0	-	3	A	
Output DC Current Limit	-	-	200	%Io,max	Hiccup Mode
Output Short-Circuit Current	-	0.12	-	A	Vo≤250mV, Hiccup Mode
Output Capacitance ESR≥ 1 mΩ ESR≥0.15 mΩ ESR≥ 10 mΩ	 0 0 0	 - - -	 47 1000 3000	 uF uF uF	 Without the Tunable Loop™ With the Tunable Loop™ With the Tunable Loop™
Turn-On Delay Time	-	2	-	mS	Case 1: On/Off input is enabled and then input power is applied (delay from instant at which $V_{IN} = V_{IN, min}$ until Vo =10% of Vo, set)
	-	2	-	mS	Case 2: Input power is applied for at least one second and then the On/Off input is enabled (delay from instant at which Von/Off is enabled until Vo =10% of Vo, set)
Output voltage Rise time	-	5	-	mS	time for Vo to rise from 10% of Vo, set to 90% of Vo, set
Output voltage overshoot	-	-	3	%Vo	$V_{in}=V_{in, min}$ to $V_{in, max}$, $I_o=I_{o, max}$, With or without maximum external capacitance

Dynamic Load Response

△V0%~50% of Max Load	Peak Deviation	-	90	-	mV	di/dt=10A/us, Vin=5V, Vo=1.5V, Ta=25°C, Co=0
	Settling Time	-	20	-	uS	
△V50%~0% of Max Load	Peak Deviation	-	100	-	mV	
	Settling Time	-	20	-	uS	

Note: Unless otherwise indicated, specifications apply over all operating input voltage, resistive load, and temperature conditions.

General Specifications

Parameter	Min	Typ	Max	Unit	Notes
Efficiency					
Vo=0.6V	-	81.2	-	%	Vin= 3.3Vdc, Ta=25°C
Vo=1.2V	-	89.4	-	%	Io=Io, max , Vo= Vo,set
Vo=1.8V	-	91.4	-	%	
Vo=2.5V	-	93.9	-	%	Vin=5.0V, when Vo=3.3V
Vo=3.3V	-	94.4	-	%	
Switching Frequency	-	600	-	kHz	
Over Temperature Protection	-	140	-	°C	
Weight	-	1.55	-	g	
MTBF	16,139,760			hours	Calculated MTBF (Io=80% full load, Ta=40deg C) Telcordia Issue 2, Method I Case 3
Dimensions					
Inches (L × W × H)	0.48 x 0.48 x 0.246			-	
Millimeters (L × W × H)	12.19 x 12.19 x 6.25				

Note: Unless otherwise indicated, specifications apply over all operating input voltage, resistive load, and temperature conditions.

Efficiency Data

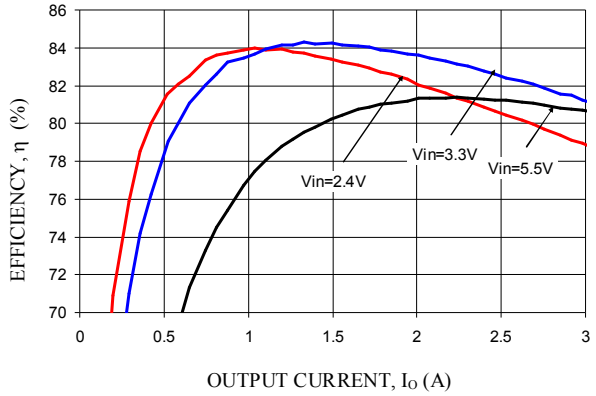

Vo=0.6V

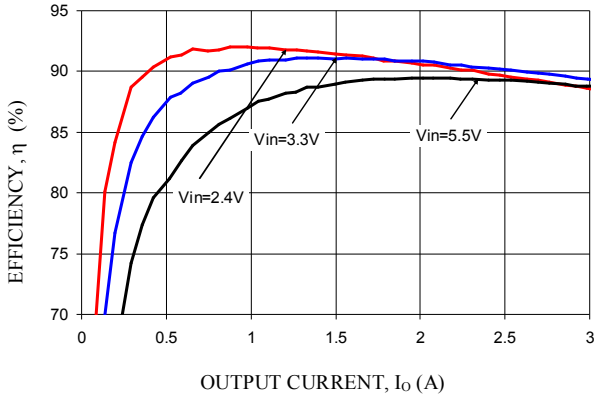

Vo=1.2V

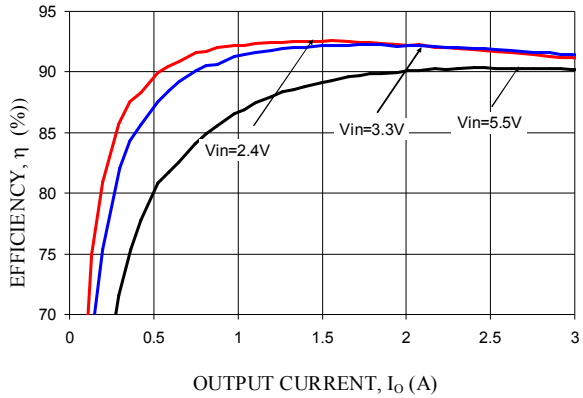

Vo=1.8V

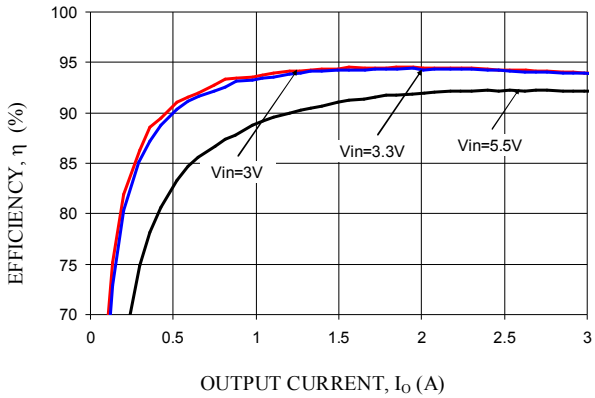

Vo=2.5V

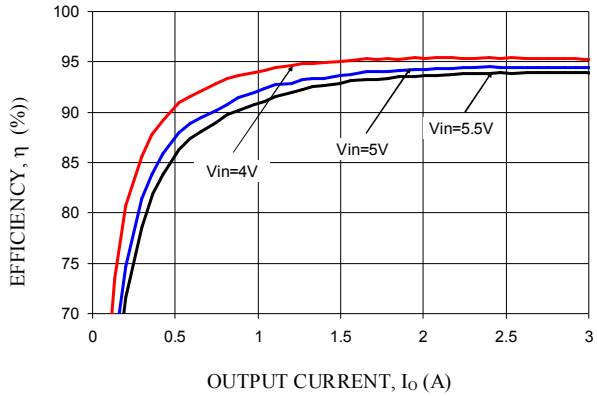

Vo=3.3V

Thermal Derating Curves

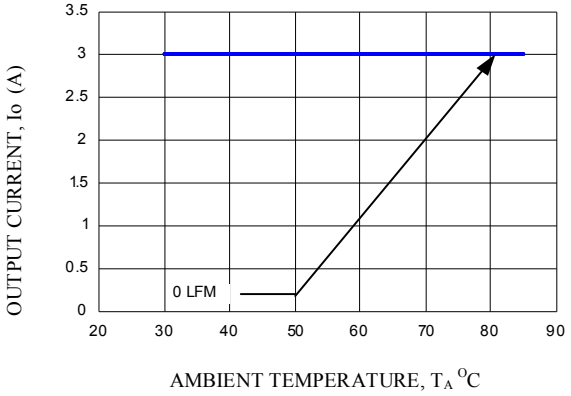

Vo=0.6V

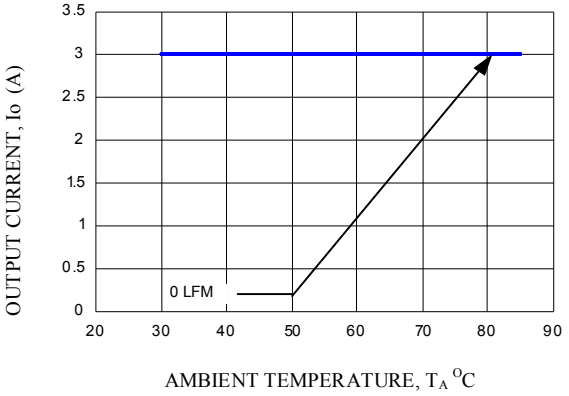

Vo=1.2V

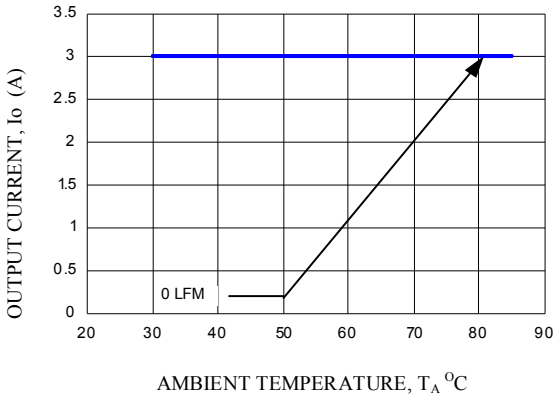

Vo=1.8V

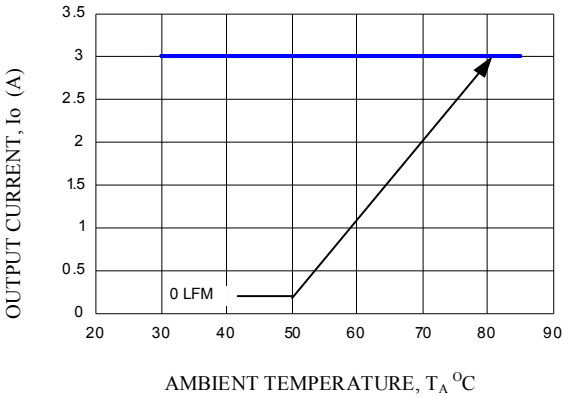

Vo=2.5V

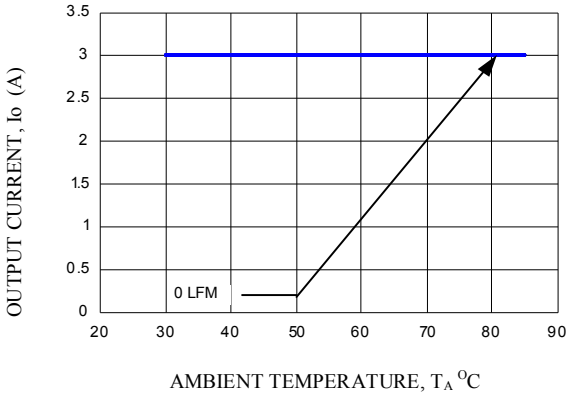

Vo=3.3V

Ripple and Noise Waveforms

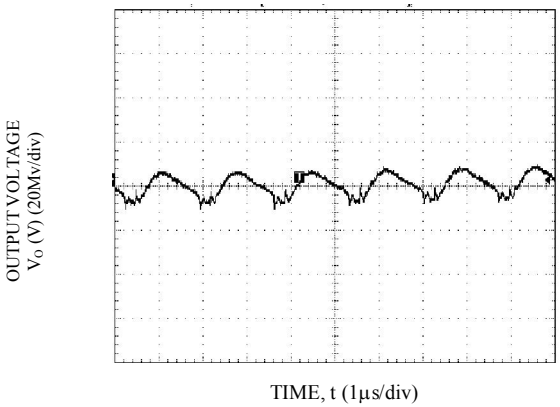

Vin=5V, Vo=0.6V, Io = Io,max

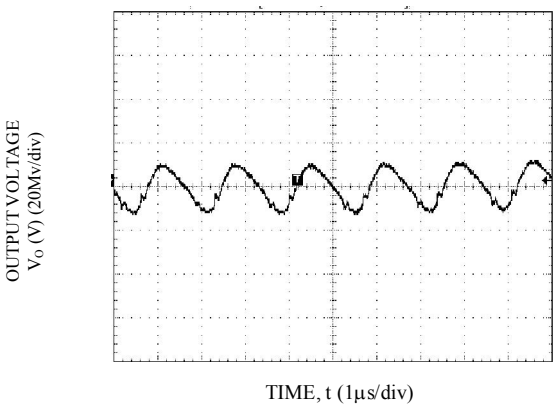

Vin=5V, Vo=1.2V, Io = Io,max

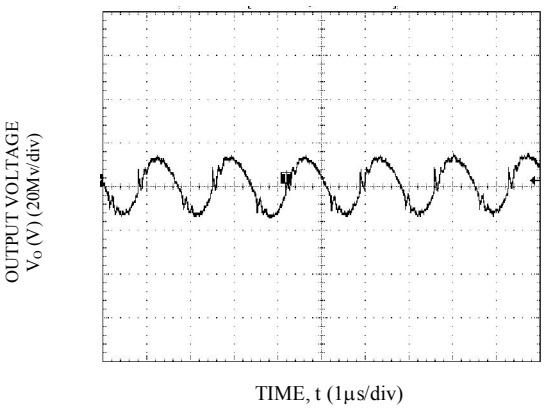

Vin=5V, Vo=1.8V, Io = Io,max

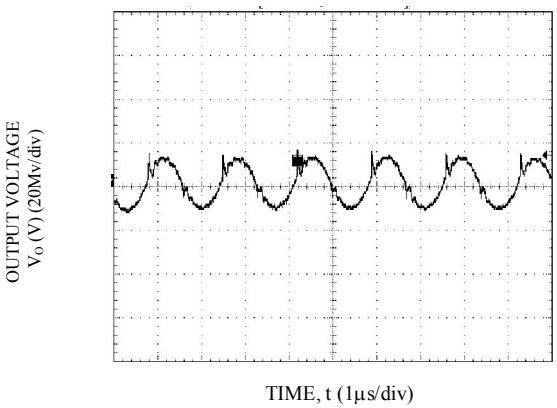

Vin=5V, Vo=2.5V, Io = Io,max

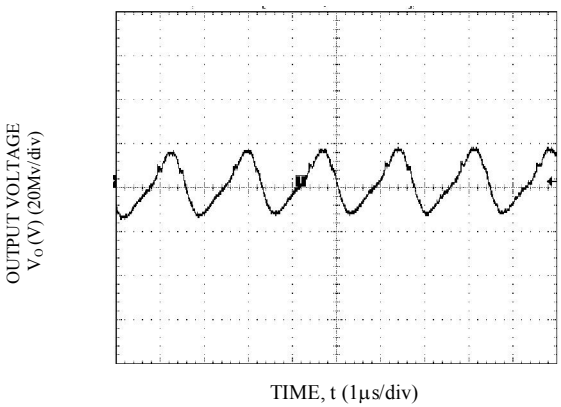

Vin=5V, Vo=3.3V, Io = Io,max

Transient Response Waveforms

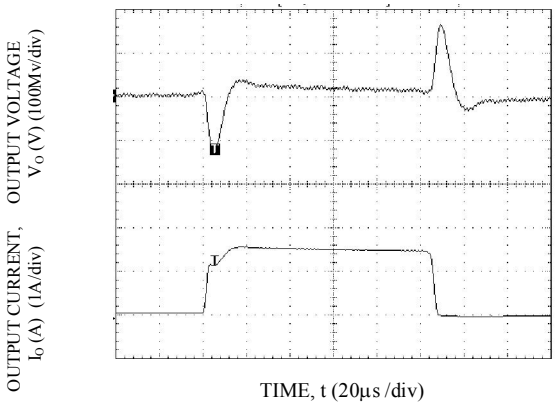

Transient Response to Dynamic Load Change from 0% to 50% to 0%. Vin=5V, Vo=0.6V

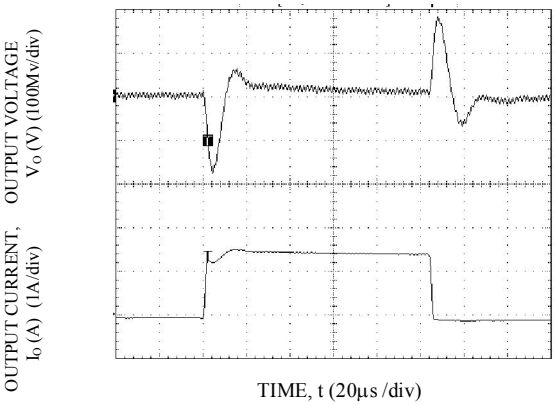

Transient Response to Dynamic Load Change from 0% to 50% to 0%. Vin=5V, Vo=1.2V

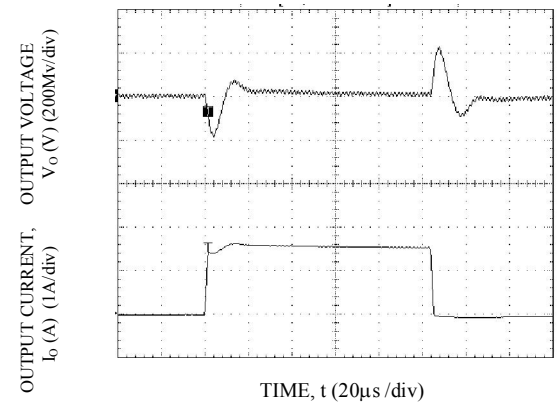

Transient Response to Dynamic Load Change from 0% to 50% to 0%. Vin=5V, Vo=1.8V

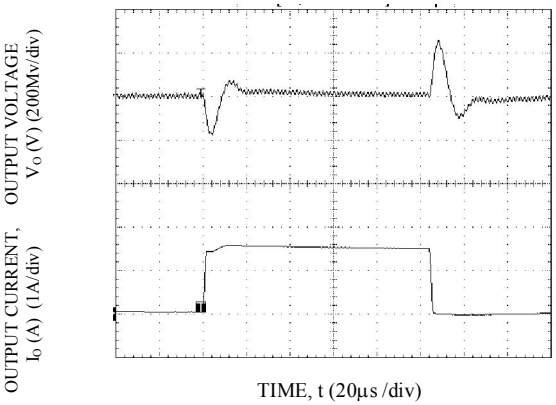

Transient Response to Dynamic Load Change from 0% to 50% to 0%. Vin=5V, Vo=2.5V

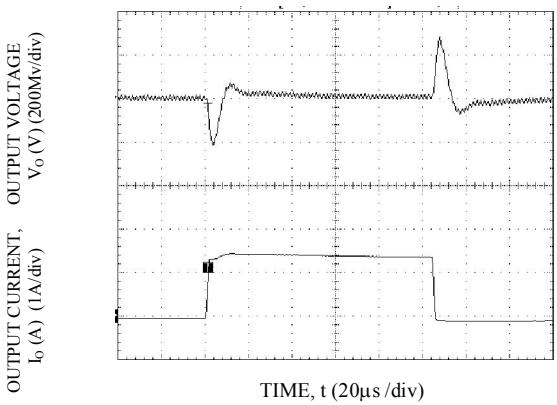

Transient Response to Dynamic Load Change from 0% to 50% to 0%. Vin=5V, Vo=3.3V

Startup Time

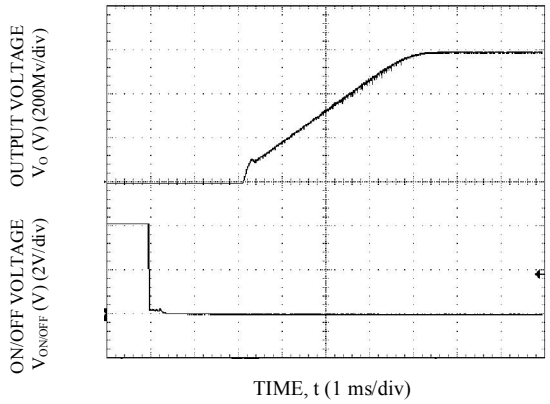

Start-up Using On/Off Voltage ($I_o = I_{o,max}$), Vo=0.8V

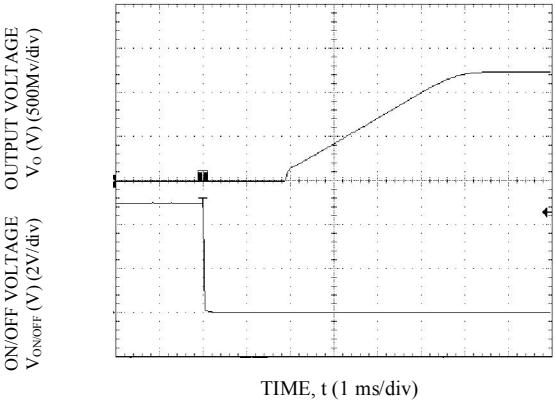

Start-up Using On/Off Voltage ($I_o = I_{o,max}$), Vo=1.2V

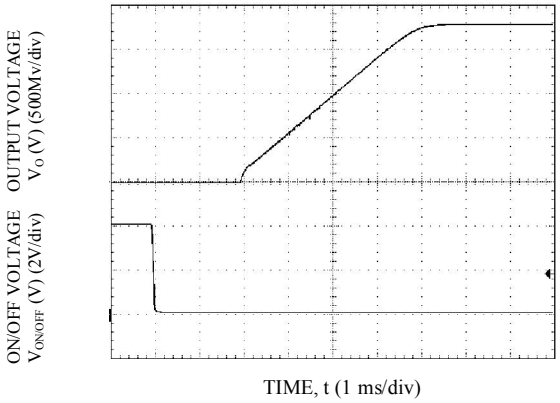

Start-up Using On/Off Voltage ($I_o = I_{o,max}$), Vo=1.8V

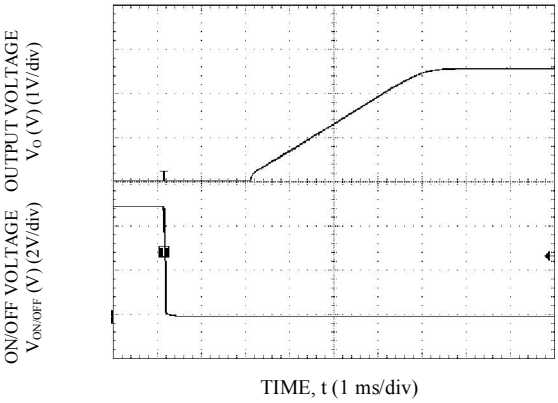

Start-up Using On/Off Voltage ($I_o = I_{o,max}$), Vo=2.5V

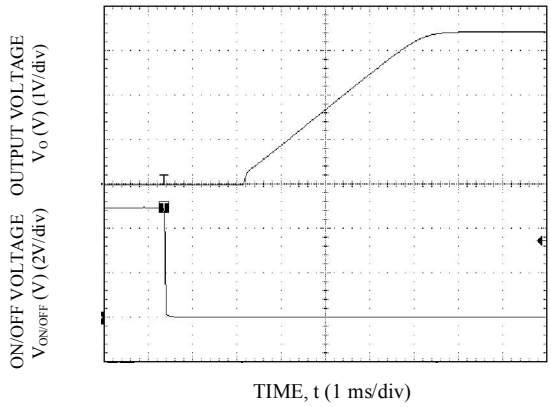

Start-up Using On/Off Voltage ($I_o = I_{o,max}$), Vo=3.3V

Startup Time (continued)

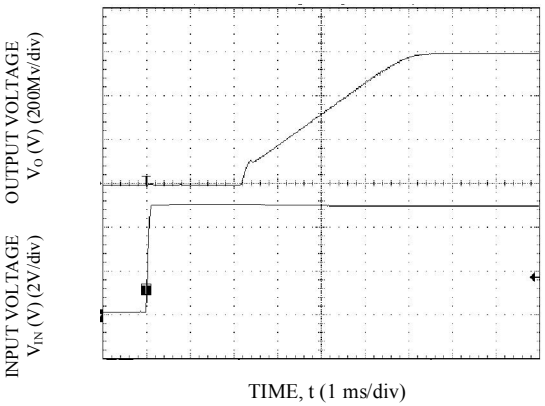

Start-up Using Input Voltage (V_{IN} = 5V, I_o = $I_{o,max}$), Vo=0.8V

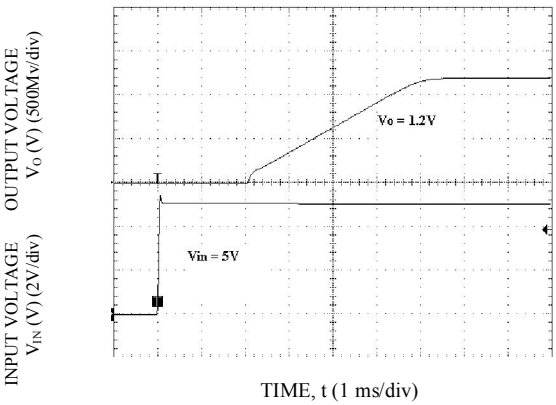

Start-up Using Input Voltage (V_{IN} = 5V, I_o = $I_{o,max}$), Vo=1.2V

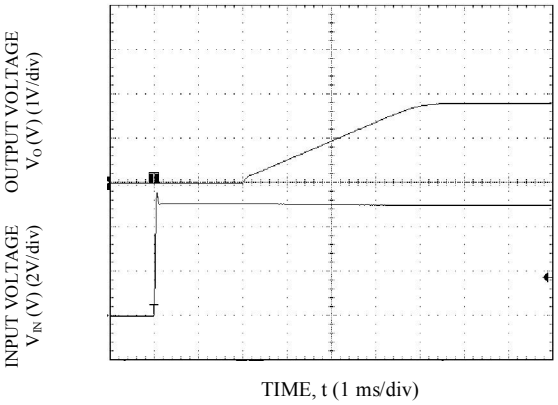

Start-up Using Input Voltage (V_{IN} = 5V, I_o = $I_{o,max}$), Vo=1.8V

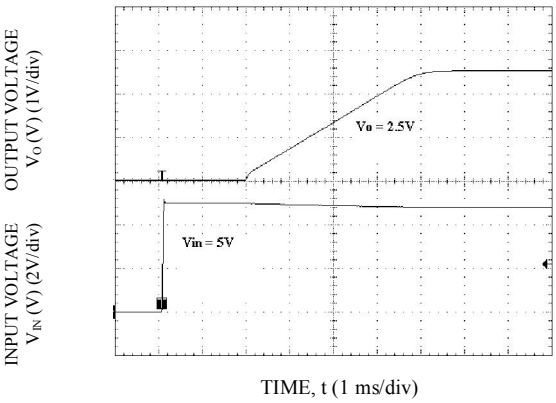

Start-up Using Input Voltage (V_{IN} = 5V, I_o = $I_{o,max}$), Vo=2.5V

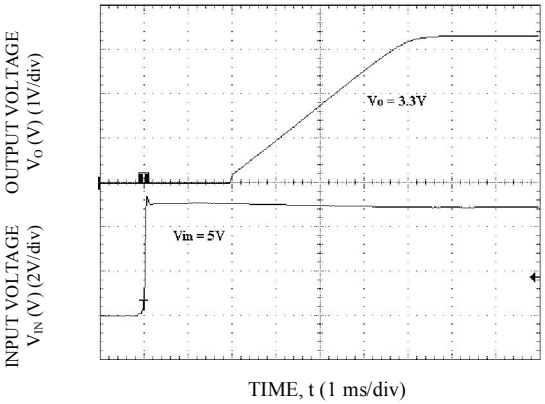

Start-up Using Input Voltage (V_{IN} = 5V, I_o = $I_{o,max}$), Vo=3.3V

Test Configurations

Input Reflected Ripple Current Test Setup.

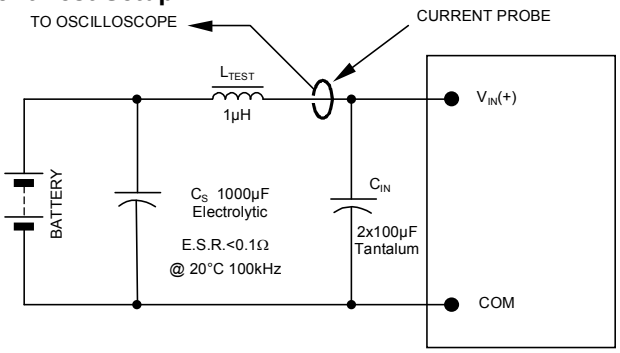

NOTE: Measure input reflected ripple current with a simulated source inductance (L_{TEST}) of 1µH. Capacitor C_S offsets possible battery impedance. Measure current as shown above.

Output Ripple and Noise Test Setup.

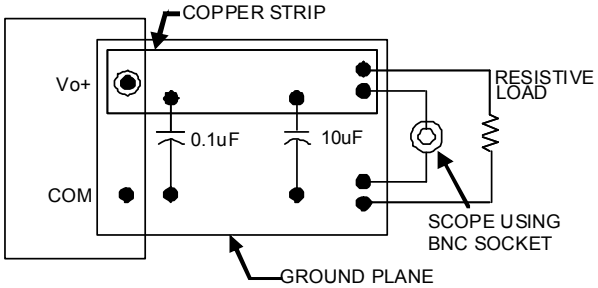

NOTE: All voltage measurements to be taken at the module terminals, as shown above. If sockets are used then Kelvin connections are required at the module terminals to avoid measurement errors due to socket contact resistance.

Output Voltage and Efficiency Test Setup.

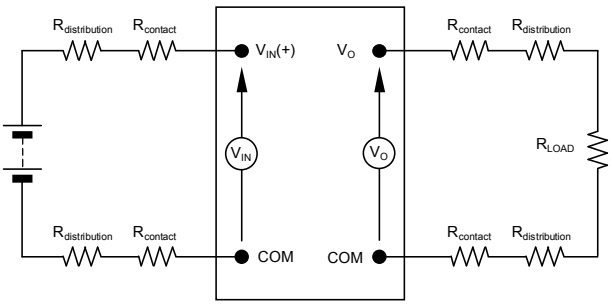

NOTE: All voltage measurements to be taken at the module terminals, as shown above. If sockets are used then Kelvin connections are required at the module terminals to avoid measurement errors due to socket contact resistance.

$$\text{Efficiency} \quad \eta = \frac{V_O . I_O}{V_{IN} . I_{IN}} \times 100 \ \%$$

Input Filtering

The SLIN-03F2Ax module should be connected to a low ac-impedance source. A highly inductive source can affect the stability of the module. An input capacitor must be placed directly adjacent to the input pin of the module, to minimize input ripple voltage and ensure module stability.

To minimize input voltage ripple, low-ESR ceramic capacitors are recommended at the input of the module. Figure A shows the input ripple voltage for various output voltages at 3A of load current with 1x22 µF or 2x22 µF ceramic capacitors and an input of 5V. Figure B shows data for the 3.3Vin case, with 1x22µF or 2x22µF of ceramic capacitors at the input.

Figure A

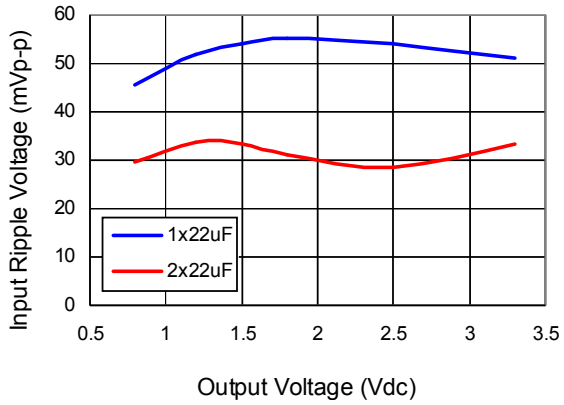

Figure B

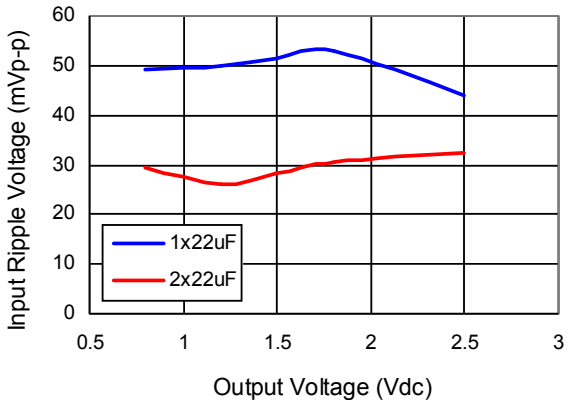

Output Filtering

The SLIN-03F2Ax modules are designed for low output ripple voltage and will meet the maximum output ripple specification with 0.1 µF ceramic and 10 µF ceramic capacitors at the output of the module. However, additional output filtering may be required by the system designer for a number of reasons. First, there may be a need to further reduce the output ripple and noise of the module. Second, the dynamic response characteristics may need to be customized to a particular load step change.

To reduce the output ripple and improve the dynamic response to a step load change, additional capacitance at the output can be used. Low ESR ceramic and polymer capacitors are recommended to improve the dynamic response of the module. Figure A below provides output ripple information for different external capacitance values at various Vo and for load currents of 3A while maintaining an input voltage of 5V. Figure B below shows the performance with a 3.3V input. For stable operation of the module, limit the capacitance to less than the maximum output capacitance as specified in the electrical specification table. Optimal performance of the module can be achieved by using the Tunable Loop™ feature described later in this data sheet.

Fig. A

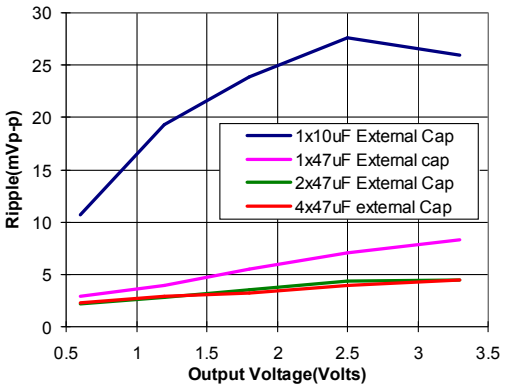

Fig. B

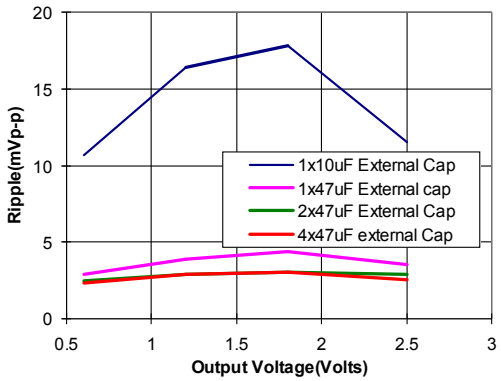

Safety Considerations

For safety agency approval the power module must be installed in compliance with the spacing and separation requirements of the end-use safety agency standards, i.e., UL 60950-1, CSA C22.2 No. 60950-1-03, and VDE 0850:2001-12 (EN60950-1) Licensed.

For the converter output to be considered meeting the requirements of safety extra-low voltage (SELV), the input must meet SELV requirements. The power module has extra-low voltage (ELV) outputs when all inputs are ELV.

The input to these units is to be provided with a fast-acting fuse with a maximum rating of 5A in the positive input lead.

Remote On/Off

Parameter		Min	Typ	Max	Unit	Notes
Signal Low (Unit On)	Active Low	-0.2	-	Vin-1.6	V	The remote on/off pin open, Unit on.
Signal High (Unit Off)		Vin-0.8	-	Vin,max	V	
Signal Low (Unit Off)	Active High	-0.3	-	0.3	V	The remote on/off pin open, Unit on.
Signal High (Unit On)		1.2	-	Vin,max	V	

The SLIN-03F2Ax modules feature an On/Off pin for remote On/Off operation. Two On/Off logic options are available. In the Positive Logic On/Off option, the module turns ON during a logic High on the On/Off pin and turns OFF during a logic Low. With the Negative Logic On/Off option, the module turns OFF during logic High and ON during logic Low. The On/Off signal is always referenced to ground. For either On/Off logic option, leaving the On/Off pin disconnected will turn the module ON when input voltage is present.

For positive logic modules, the circuit configuration for using the On/Off pin is shown in Figure A below. When the external transistor Q1 is in the OFF state, Q2 is ON, the internal PWM Enable signal is pulled low and the module is ON. When transistor Q1 is turned ON, the On/Off pin is pulled low, Q2 is turned off and the internal PWM Enable signal is pulled high through the 100K internal pull-up resistor and the module is OFF.

For negative logic On/Off modules, the circuit configuration is shown in Figure B below. The On/Off pin should be pulled high with an external pull-up resistor (suggested value for the 2.4V to 5.5Vin range is 3.6Kohms). When transistor Q1 is in the OFF state, the On/Off pin is pulled high and the module is OFF. The On/Off threshold for logic High on the On/Off pin depends on the input voltage and its minimum value is V_{IN} – 1.6V. To turn the module ON, Q1 is turned ON pulling the On/Off pin low.

Fig. A

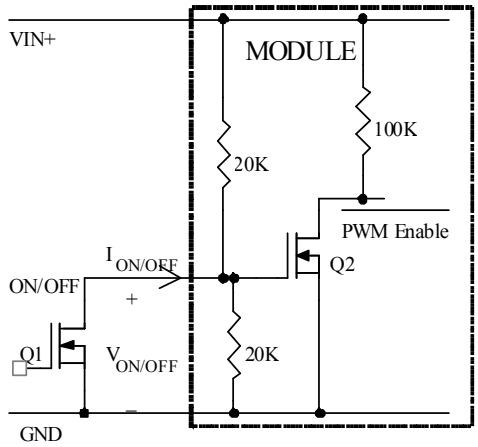

Fig. B

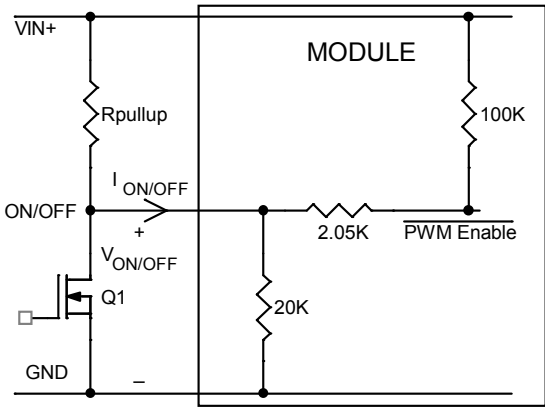

Over Current Protection

To provide protection in a fault (output overload) condition, the unit is equipped with internal current-limiting circuitry and can endure current limiting continuously. At the point of current-limit inception, the unit enters hiccup mode. The unit operates normally once the output current is brought back into its specified range.

Over Temperature Protection

To provide protection in a fault condition, the unit is equipped with a thermal shutdown circuit. The unit will shutdown if the over temperature threshold of 140°C is exceeded at the thermal reference point Tref. The thermal shutdown is not intended as a guarantee that the unit will survive temperatures beyond its rating. Once the unit goes into thermal shutdown it will then wait to cool before attempting to restart.

Input Under-voltage Lockout

At input voltages below the input under voltage lockout limit, the module operation is disabled. The module will begin to operate at an input voltage above the under voltage lockout turn-on threshold.

Output Voltage Programming

The output voltage of the SLIN-03F2Ax module can be programmed to any voltage from 0.6Vdc to 3.63Vdc by connecting a resistor between the Trim and GND pins of the module. Certain restrictions apply on the output voltage set point depending on the input voltage. These are shown in the Output Voltage vs. Input Voltage Set Point Area plot in the figure below. The Upper Limit curve shows that the entire output voltage range is available with the maximum input voltage of 5.5V. The Lower Limit curve shows that for output voltages of 1.8V and higher, the input voltage needs to be larger than the minimum of 2.4V.

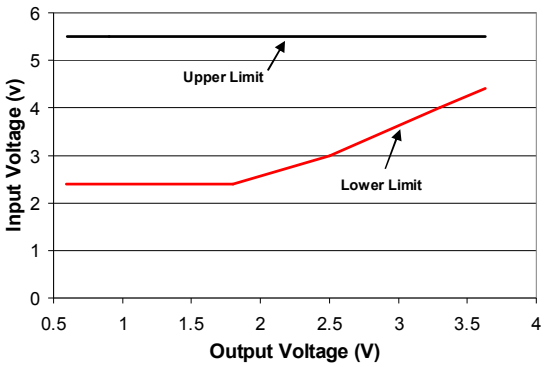

Output Trim Equations

Without an external resistor between Trim and GND pins, the output of the module will be 0.6Vdc. To calculate the value of the trim resistor, *Rtrim* for a desired output voltage, use the following equation:

$$Rtrim = \left[\frac{1.2}{(Vo - 0.6)} \right] K\Omega$$

Rtrim is the external resistor in $K\Omega$
Vo is the desired output voltage.

By using a ±0.5% tolerance trim resistor with a TC of ±25ppm, a set point tolerance of ±1.5% can be achieved as specified in the electrical specification. Table 1 provides Rtrim values required for some common output voltages.

Table 1

$V_{O,\,set}$ (V)	*Rtrim* (KΩ)
0.6	Open
1.0	3.0
1.2	2.0
1.5	1.333
1.8	1.0
2.5	0.632
3.3	0.444

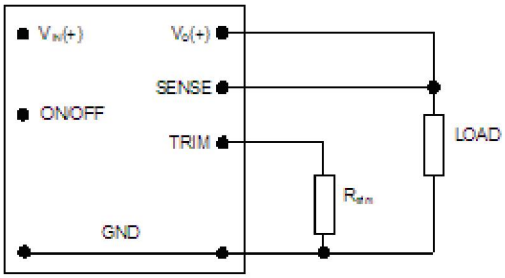

Circuit configuration for programming output voltage using an external resistor

Remote Sense

The SLIN-03F2Ax power modules have a Remote Sense feature to minimize the effects of distribution losses by regulating the voltage at the SENSE pin. The voltage between the SENSE pin and VOUT pin must not exceed 0.5V. Note that the output voltage of the module cannot exceed the specified maximum value. This includes the voltage drop between the SENSE and Vout pins. When the Remote Sense feature is not being used, connect the SENSE pin to the VOUT pin.

Voltage Margining

Output voltage margining can be implemented in the SLIN-03F2Ax modules by connecting a resistor, $R_{margin\text{-}up}$, from the Trim pin to the ground pin for margining-up the output voltage and by connecting a resistor, $R_{margin\text{-}down}$, from the Trim pin to output pin for margining-down. The figure below shows the circuit configuration for output voltage margining.

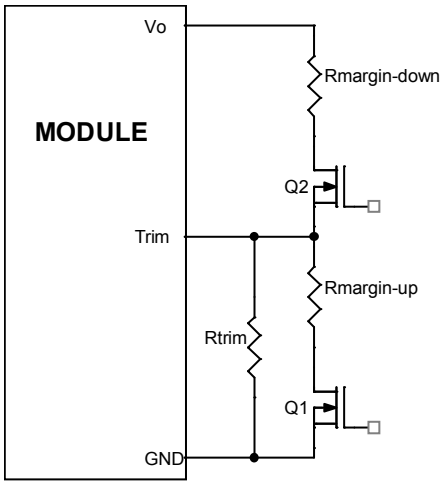

Circuit Configuration for margining Output voltage

Monotonic Start-up and Shutdown

The SLIN-03F2Ax modules have monotonic start-up and shutdown behavior for any combination of rated input voltage, output current and operating temperature range.

Startup into Pre-biased Output

The SLIN-03F2Ax modules can start into a prebiased output as long as the prebias voltage is 0.5V less than the set output voltage.

Tunable Loop™

The SLIN-03F2Ax modules have a new feature that optimizes transient response of the module called Tunable Loop™.

External capacitors are usually added to the output of the module for two reasons: to reduce output ripple and noise and to reduce output voltage deviations from the steady-state value in the presence of dynamic load current changes. Adding external capacitance however affects the voltage control loop of the module, typically causing the loop to slow down with sluggish response. Larger values of external capacitance could also cause the module to become unstable.

The Tunable Loop™ allows the user to externally adjust the voltage control loop to match the filter network connected to the output of the module. The Tunable Loop™ is implemented by connecting a series R-C between the SENSE and TRIM pins of the module. This R-C allows the user to externally adjust the voltage loop feedback compensation of the module.

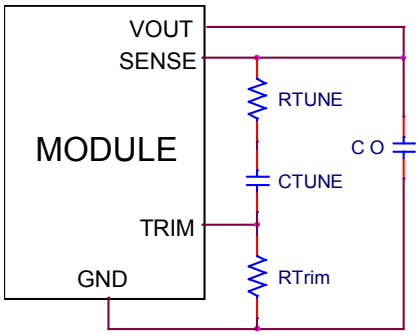

Circuit diagram showing connection of R_{TUNE} and C_{TUNE} to tune the control loop of the module

Recommended values of R_{TUNE} and C_{TUNE} for different output capacitor combinations are given in Tables 2, 3, 4 and 5. Tables 2 and 4 show the recommended values of R_{TUNE} and C_{TUNE} for different values of ceramic output capacitors up to 470uF that might be needed for an application to meet output ripple and noise requirements for 5Vin and 3.3Vin respectively. Selecting R_{TUNE} and C_{TUNE} according to Table 2 will ensure stable operation of the module.

In applications with tight output voltage limits in the presence of dynamic current loading, additional output capacitance will be required. Tables 3 and 5 list recommended values of R_{TUNE} and C_{TUNE} in order to meet 2% output voltage deviation limits for some common output voltages in the presence of a 1.5A to 3A step change (50% of full load), with an input voltage of 5Vin and 3.3Vin respectively.

Please contact your Bel Power technical representative to obtain more details of this feature as well as for guidelines on how to select the right value of external R-C to tune the module for best transient performance and stable operation for other output capacitance values or input voltages other than 3.3 or 5V.

Tunable Loop™ (continued)

Table 2.General recommended values of R_{TUNE} and C_{TUNE} for Vin=5V and various external ceramic capacitor combinations.

Co	1x47µF	2x47µF	4x47µF	6x47µF	10x47µF
R_{TUNE}	33	33	33	33	33
C_{TUNE}	6800pF	15nF	33nF	47nF	56nF

Table 3.Recommended values of R_{TUNE} and C_{TUNE} to obtain transient deviation of ⩽2% of Vout for a 1.5A step load with Vin=5V.

Vo	**3.3V**	**2.5V**	**1.8V**	**1.2V**	**0.6V**
Co	1 x 47µF	2 x 47µF	2 x 47µF	4 x 47µF	2 x 47µF +330µF Polymer
R_{TUNE}	33	33	33	33	33
C_{TUNE}	6800pF	15nF	15nF	33nF	82nF
ΔV	59mV	35mV	35mV	21mV	12mV

Table 4. General recommended values of R_{TUNE} and C_{TUNE} for Vin=3.3V and various external ceramic capacitor combinations.

Cext	**1x47µF**	**2x47µF**	**4x47µF**	**6x47µF**	**10x47µF**
R_{TUNE}	33	33	33	33	33
C_{TUNE}	15nF	27nF	47nF	56nF	68nF

Table 5. Recommended values of R_{TUNE} and C_{TUNE} to obtain transient deviation of ⩽2% of Vout for a 1.5A step load with Vin=3.3V.

Vo	**2.5V**	**1.8V**	**1.2V**	**0.6V**
Co	2 x 47µF	2 x 47µF	4 x 47µF	4 x 47µF +330µF Polymer
R_{TUNE}	33	33	33	33
C_{TUNE}	22nF	27nF	47nF	150nF
ΔV	46mV	32mV	24mV	12mV

Thermal Considerations

Power modules operate in a variety of thermal environments; however, sufficient cooling should always be provided to help ensure reliable operation.

Considerations include ambient temperature, airflow, module power dissipation, and the need for increased reliability. A reduction in the operating temperature of the module will result in an increase in reliability. The thermal data presented here is based on physical measurements taken in a wind tunnel. The test set-up is shown below.

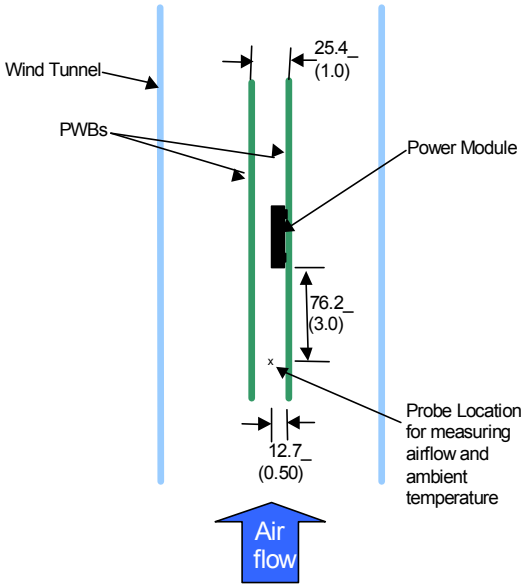

Thermal Test Setup

The thermal reference point, T_{ref}, used in the specifications is shown below. For reliable operation the temperatures at this point should not exceed 125°C. The output power of the module should not exceed the rated power of the module (Vo,set x Io,max).

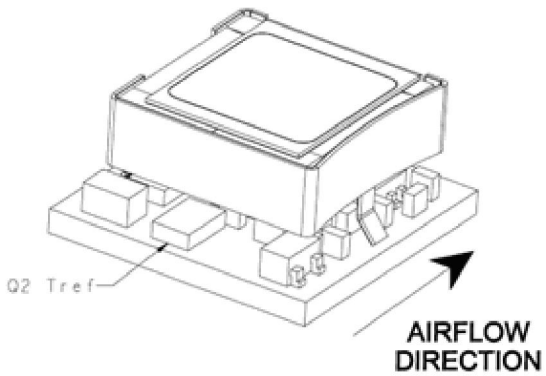

Example Application Circuit

Requirements:

Vin:	3.3V
Vout:	1.8V
Iout:	2.25A max., worst case load transient is from 1.5A to 2.25A
ΔVout:	1.5% of Vout (27mV) for worst case load transient
Vin, ripple	1.5% of Vin (50mV, p-p)

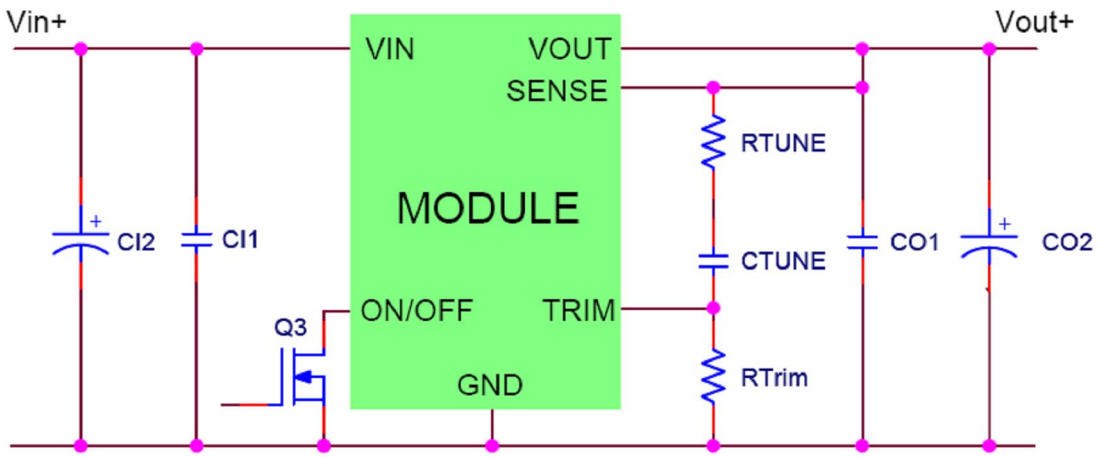

CI1	22μF/6.3V ceramic capacitor
CI2	47μF/6.3V bulk electrolytic
CO1	2 x 47μF/6.3V ceramic capacitor (e.g. Murata GRM31CR60J476ME19)
Ctune	27nF ceramic capacitor (can be 1206, 0805 or 0603 size)
Rtune	33 ohms SMT resistor (can be 1206, 0805 or 0603 size)
Rtrim	1kΩ SMT resistor (can be 1206, 0805 or 0603 size, recommended tolerance of 0.1%)

Mechanical Outline

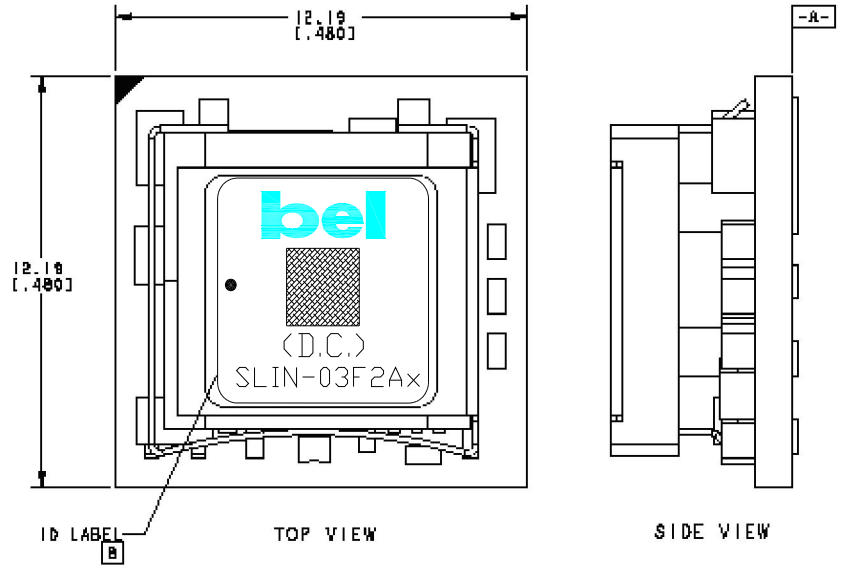

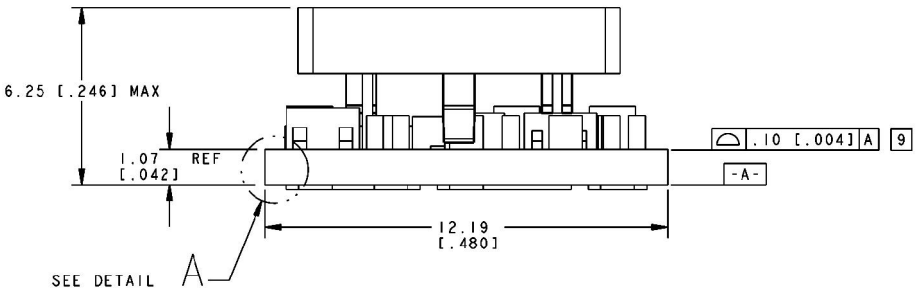

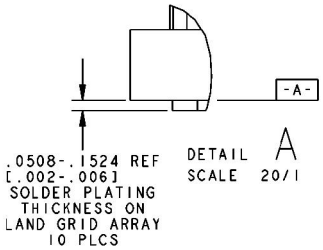

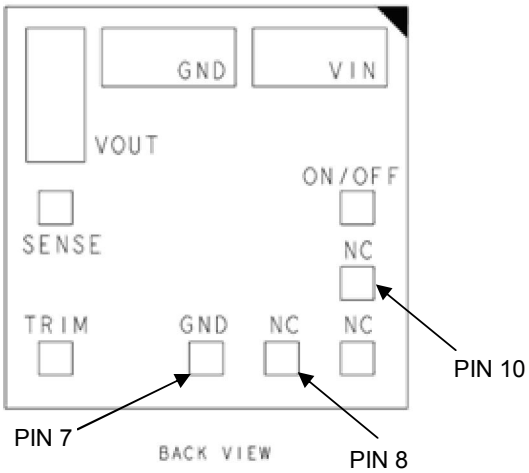

PIN	FUNCTION
1	ON/OFF
2	VIN
3	GND
4	VOUT
5	SENSE
6	TRIM
7	GND
8	NC
9	NC
10	NC

Mechanical Outline (continued)

Recommended Pad Layout

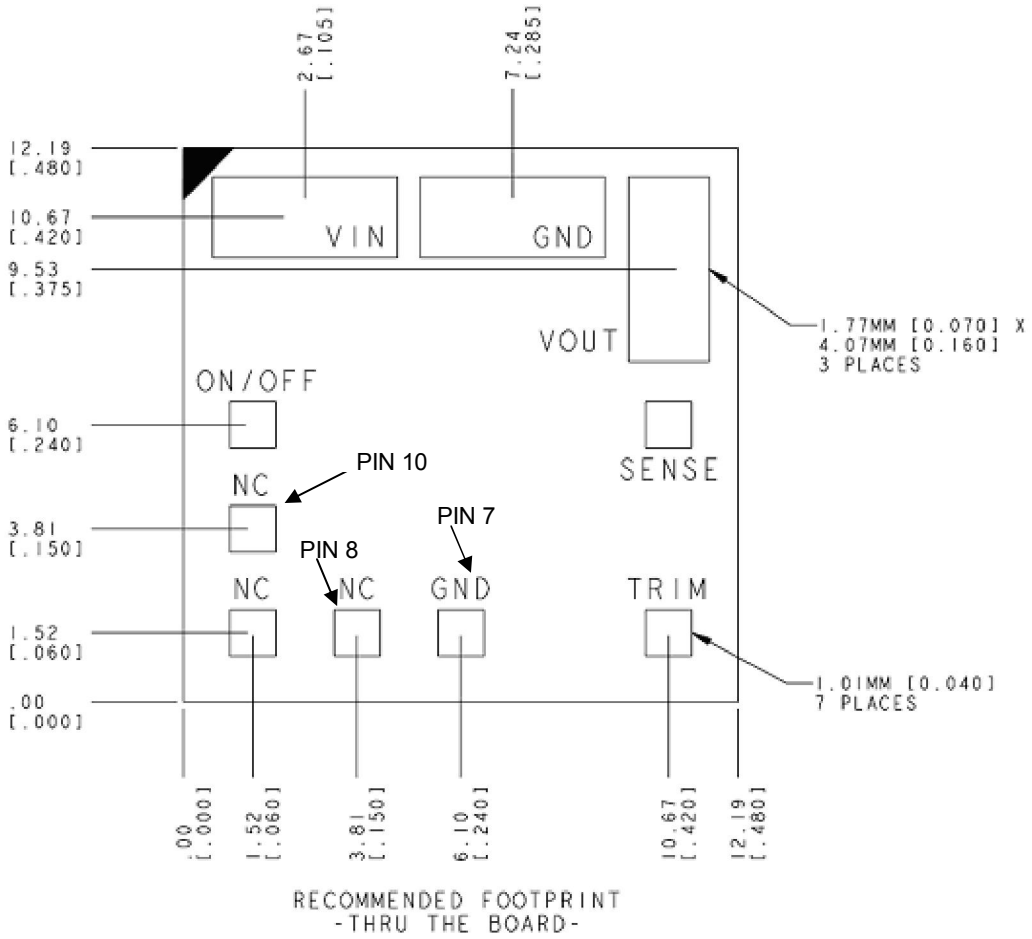

Dimensions are in millimeters and (inches).
Tolerances: x.x mm ± 0.5 mm (x.xx in. ± 0.02 in.) [unless otherwise indicated]
x.xx mm ± 0.25 mm (x.xxx in ± 0.010 in.)

Packaging Details

The SLIN-03F2Ax modules are supplied in tape & reel as standard.

All Dimensions are in millimeters and (in inches).

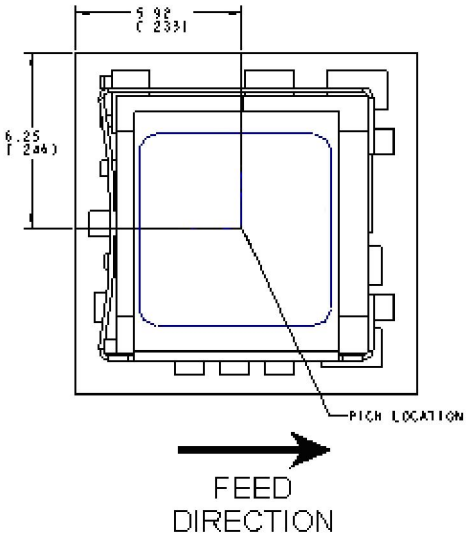

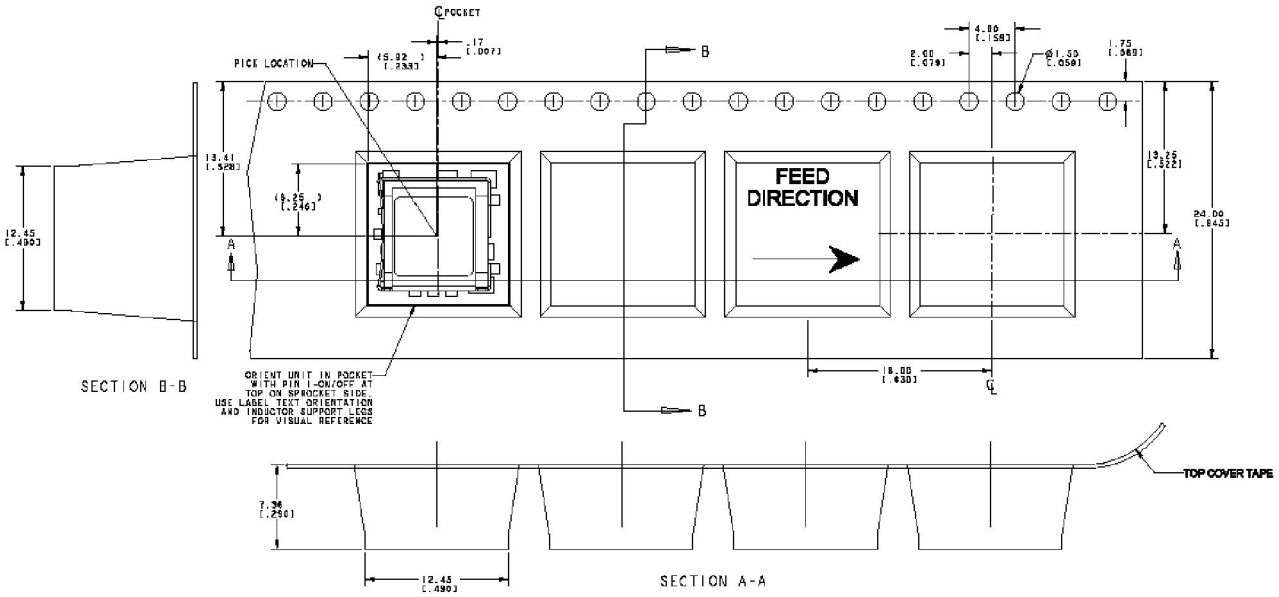

SURFACE MOUNT TAPE AND REEL DETAILS

Reel Dimensions :
Outside Dimensions : 330.2 mm (13.00'')
Inside Dimensions : 177.8 mm (7.00")
Tape Width: 24.00 mm (0.945")

Surface Mount Information

Pick and Place

The SLIN-03F2Ax modules use an open frame construction and are designed for a fully automated assembly process. The modules are fitted with a label designed to provide a large surface area for pick and place operations. The label meets all the requirements for surface mount processing, as well as safety standards, and is able to withstand reflow temperatures of up to 300°C. The label also carries product information such as part number and serial number.

Nozzle Recommendations

The module weight has been kept to a minimum by using open frame construction. Variables such as nozzle size, tip style, vacuum pressure and placement speed should be considered to optimize this process. The minimum recommended inside nozzle diameter for reliable operation is 3mm. The maximum nozzle outer diameter, which will safely fit within the allowable component spacing, is 7 mm.

Lead Free Soldering

The SLIN-03F2Ax modules are lead-free (Pb-free) and RoHS compliant and are both forward and backward compatible in a Pb-free and a SnPb soldering process. Failure to observe the instructions may result in the failure of or cause damage to the modules and can adversely affect long-term reliability.

Pb-free Reflow Profile

Power Systems will comply with J-STD-020 Rev. C (Moisture/Reflow Sensitivity Classification for Nonhermetic Solid State Surface Mount Devices) for both Pb-free solder profiles and MSL classification procedures. This standard provides a recommended forced-air-convection reflow profile based on the volume and thickness of the package. The suggested Pb-free solder paste is Sn/Ag/Cu (SAC). The recommended linear reflow profile using Sn/Ag/Cu solder is shown below.

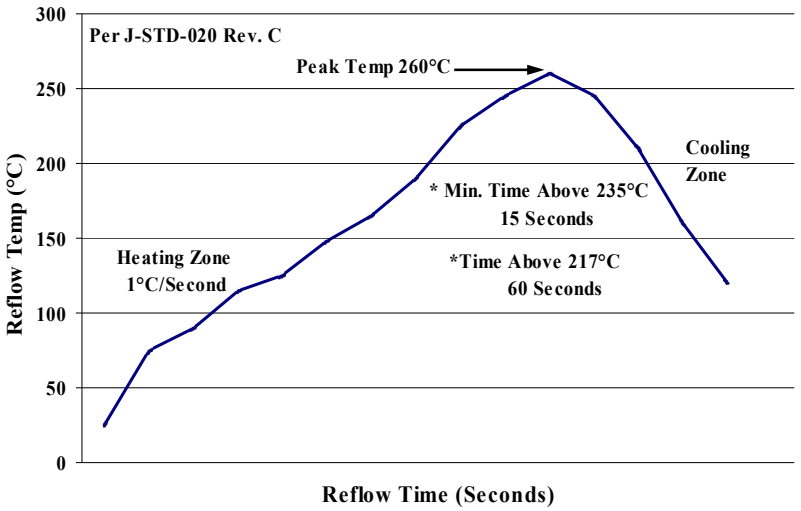

Recommended linear reflow profile using Sn/Ag/Cu solder

MSL Rating

The SLIN-03F2Ax modules have a MSL rating of 2A.

Storage and Handling

The recommended storage environment and handling procedures for moisture-sensitive surface mount packages is detailed in J-STD-033 Rev. A (Handling, Packing, Shipping and Use of Moisture/Reflow Sensitive Surface Mount Devices). Moisture barrier bags (MBB) with desiccant are required for MSL ratings of 2 or greater. These sealed packages should not be broken until time of use. Once the original package is broken, the floor life of the product at conditions of <= 30°C and 60% relative humidity varies according to the MSL rating (see J-STD-033A). The shelf life for dry packed SMT packages will be a minimum of 12 months from the bag seal date, when stored at the following conditions: < 40° C, < 90% relative humidity.

Post Solder Cleaning and Drying Considerations

Post solder cleaning is usually the final circuit-board assembly process prior to electrical board testing. The result of inadequate cleaning and drying can affect both the reliability of a power module and the testability of the finished circuit-board assembly.

Revision History

Date	Revision	Changes Detail	Approval
2010-4-14	A	First release	T. Bubriski
2010-12-10	B	Updated Output Short-Circuit Current on page 3.	T. Bubriski
2012-6-26	C	Add label.	HL
2013-01-25	D	Update UL.	HL
2014-9-18	E	Update input specifications, output specifications, output trim equations, tunable loop™, and example application circuit.	XF Jiang

RoHS Compliance

Complies with the European Directive 2011/65/EU, calling for the elimination of lead and other hazardous substances from electronic products.

©2015 Bel Fuse Inc. Specifications subject to change without notice. 071715

CORPORATE

Bel Fuse Inc.
206 Van Vorst Street
Jersey City, NJ 07302
Tel 201-432-0463
Fax 201-432-9542
www.belfuse.com

FAR EAST

Bel Fuse Ltd.
8F/ 8 Luk Hop Street
San Po Kong
Kowloon, Hong Kong
Tel 852-2328-5515
Fax 852-2352-3706
www.belfuse.com

EUROPE

Bel Fuse Europe Ltd.
Preston Technology Management Centre
Marsh Lane, Suite G7, Preston
Lancashire, PR1 8UD, U.K.
Tel 44-1772-556601
Fax 44-1772-888366
www.belfuse.com