SLIN-02E2AL

Non-Isolated DC-DC Converter

The SLIN-02E2AL power modules are non-isolated dc-dc converters that can deliver up to 2 A of output current. These modules operate over a wide input voltage range (Vin = 3 -14 VDC) and provide a precisely regulated output voltage from 0.6 to 5.5 VDC, programmable via an external resistor.

Features include remote on/off, adjustable output voltage, over current and over temperature protection. A new feature, the Tunable Loop™, allows the user to optimize the dynamic response of the converter to match the load with reduced amount of output capacitance leading to savings on cost and PWB area.

Key Features & Benefits

- 3 - 14 VDC Input
- 0.6 - 5.5 VDC @ 2 A Output
- Fixed Switching Frequency
- Power Good Signal
- Remote On/Off
- Ability to Sink and Source Current
- Cost Efficient Open Frame Design
- Over Temperature Protection
- Tunable Loop™ (a Registered Trademark of Lineage Power Systems) to Optimize Dynamic Output Voltage Response
- Certificated to UL/CSA 62368-1
- Certificated to IEC/EN 62368-1
- Class II, Category 2, Non-Isolated DC/DC Converter (refer to IPC-9592B)

Applications

- Distributed Power Architectures
- Intermediate Bus Voltage Applications
- Telecommunications Equipment
- Servers and Storage Applications
- Networking Equipment
- Industrial Equipment

1. MODEL SELECTION

MODEL NUMBER	OUTPUT VOLTAGE	INPUT VOLTAGE	MAX. OUTPUT CURRENT	MAX. OUTPUT POWER	TYPICAL EFFICIENCY
SLIN-02E2ALG SLIN-02E2ALR	0.6 - 5.5 VDC	3 - 14 VDC	2 A	11 W	93.6%

PART NUMBER EXPLANATION

S	LIN	-	02	E	2A	L	y
Mounting Type	Series Code		Output Current	Input Voltage Range	Sequencing or not	Active Logic	Package Type
Surface Mount	SLIN Series		2 A	3 - 14 V	without Sequencing	Active Low	G – Tray Package R – Tape and Reel Package

2. ABSOLUTE MAXIMUM RATINGS

PARAMETER	DESCRIPTION	MIN	TYP	MAX	UNITS
Continuous non-operating Input Voltage		-0.3	-	15	V
Ambient Temperature		-40	-	85	°C
Storage Temperature		-55	-	125	°C
Altitude		-	-	4000	m

NOTE: Stresses in excess of the absolute maximum ratings can cause permanent damage to the device. These are absolute stress ratings only, functional operation of the device is not implied at these or any other conditions in excess of those given in the operations sections of the data sheet. Exposure to absolute maximum ratings for extended periods can adversely affect the device reliability.

3. INPUT SPECIFICATIONS

All specifications are typical at 25°C unless otherwise stated.

PARAMETER		DESCRIPTION	MIN	TYP	MAX	UNIT
Operating Input Voltage			3.0	-	14	V
Input Current (full load)		VIN = 3 to 14 V	-	-	1.8	A
Input Current (no load)	Vo = 0.6 V	VIN = 12 V, Io = 0, module enabled	-	20	-	mA
	Vo = 5.5 V		-	48	-	mA
Remote Off Input Current		VIN = 12 V, module disabled	-	8	-	mA
Input Reflected Ripple Current (pk-pk)		5 Hz to 20 MHz, 1 uH source impedance; VIN = 0 to 14V, Io = Iomax; See Test Configurations	-	20	-	mA
I^2t Inrush Current Transient			-	-	1	A^2s
Input Ripple Rejection (120 Hz)			-	65	-	dB
Turn-on Voltage Threshold			-	-	2.95	V
Turn-off Voltage Threshold			-	-	2.8	V
Hysteresis			-	0.2	-	V

CAUTION: This converter is not internally fused. An input line fuse must be used in application.

This power module can be used in a wide variety of applications, ranging from simple standalone operation to an integrated part of sophisticated power architecture. To preserve maximum flexibility, internal fusing is not included; however, to achieve maximum safety and system protection, always use an input line fuse. The safety agencies require a fast-acting fuse with a maximum rating of 4A. Based on the information provided in this data sheet on inrush energy and maximum dc input current, the same type of fuse with a lower rating can be used. Refer to the fuse manufacturer's data sheet for further information.

Note: Unless otherwise indicated, specifications apply over entire operating input voltage range, resistive load, and temperature conditions.

4. OUTPUT SPECIFICATIONS

All specifications are typical at nominal input, full load at 25°C unless otherwise stated.

PARAMETER		DESCRIPTION	MIN	TYP	MAX	UNIT
Output Voltage Set Point		With 0.5% tolerance for external resistor used to set output voltage	-1.5	-	1.5	%Vo,set
Output Voltage		Over entire operating input voltage range, resistive load, and temperature conditions until end of life	-2.5	-	2.5	%Vo,set
Adjustment Range			0.6	-	5.5	V
Remote Sense Range			-	-	0.5	V
Load Regulation	$V_O \geq 2.5V$ $V_O < 2.5V$	$I_O = I_{O,\,min}$ to $I_{O,\,max}$	- -	- -	10 5	mV mV
Line Regulation	$V_O \geq 2.5V$ $V_O < 2.5V$	$V_{IN} = V_{IN,\,min}$ to $V_{IN,\,max}$	- -	- -	0.4 10	%Vo,set mV
Temperature Regulation			-	-	0.4	%Vo,set
Ripple and Noise(pk-pk)		5 Hz to 20 MHz BW, $V_{IN} = V_{IN,\,no}$ and $I_O = I_{O\,,min}$ to $I_{O,\,max}$, Co = 0.1 µF // 10 µF ceramic capacitors	-	50	100	mV
Ripple and Noise(RMS)			-	20	38	mV
Output Current Range		In either sink or source mode	0	-	2	A
Output DC Current Limit		Hiccup Mode		180	-	%Io,max
Output Short-Circuit Current		Vo ≤ 250 mV, Hiccup Mode	-	140	-	mA
Output Capacitance	ESR ≥ 1 mΩ ESR ≥ 0.15 mΩ ESR ≥ 10 mΩ	Without the Tunable Loop™ With the Tunable Loop™ With the Tunable Loop™	22 0 0	- - -	47 1000 3000	µF µF µF
Turn-On Delay Time		Case 1: On/Off input is enabled and then input power is applied (delay from instant at which $V_{IN} = V_{IN,\,min}$ until Vo = 10% of Vo, set) Case 2: Input power is applied for at least one second and then the On/Off input is enabled (delay from instant at which Von/Off is enabled until Vo = 10% of Vo, set)	- -	5 5.2	- -	ms ms
Output Voltage Rise Time		time for Vo to rise from 10% of Vo, set to 90% of Vo, set	-	1.4	-	ms
Output Voltage Overshoot		$V_{IN} = V_{IN,\,min}$ to $V_{IN,\,max}$, $I_O = I_{O,\,min}$ to $I_{O,\,max}$, with or without maximum external capacitance	-	-	3.0	%Vo,set

Notes:
1. Some output voltages may not be possible depending on the input voltage.
2. External capacitors may require using the new Tunable Loop™ feature to ensure that the module is stable as well as getting the best transient response (See the Tunable Loop™ section for details).
3. Unless otherwise indicated, specifications apply over entire operating input voltage range, resistive load, and temperature conditions.

© 2021 Bel Power Solutions & Protection

5. GENERAL SPECIFICATIONS

PARAMETER		DESCRIPTION	MIN	TYP	MAX	UNIT
Efficiency	Vo = 0.6 V	Vin = 12 VDC, Ta = 25°C Io = Io, max, Vo = Vo,set	-	68.7	-	%
	Vo = 1.2 V		-	80.7	-	%
	Vo = 1.8 V		-	85.9	-	%
	Vo = 2.5 V		-	89	-	%
	Vo = 3.3 V		-	91.1	-	%
	Vo = 5.0 V		-	93.6	-	%
Switching Frequency			-	600	-	kHz
Over Temperature Protection			140	-	-	°C
PGOOD (Power Good)		Signal Interface Open Drain, Vsupply ≤ 5 VDC				
Overvoltage Threshold for PGOOD			-	112.5	-	%Vo,set
Undervoltage threshold for PGOOD			-	87.5	-	%Vo,set
Pulldown resistance of PGOOD pin			-	30	70	Ω
Weight			-	0.9	-	g
MTBF		Calculated Per Bell Core SR-332 (Io = 0.8 Io, max, Ta = 40°C, Telecordia Issue 2 Method 1 Case 3)		26,121,938		hours
Dimensions (L × W × H)				0.48 x 0.48 x 0.246		Inch
				12.19 x 12.19 x 6.25		mm

Note: Unless otherwise indicated, specifications apply over entire operating input voltage range, resistive load, and temperature conditions.

6. EFFICIENCY DATA

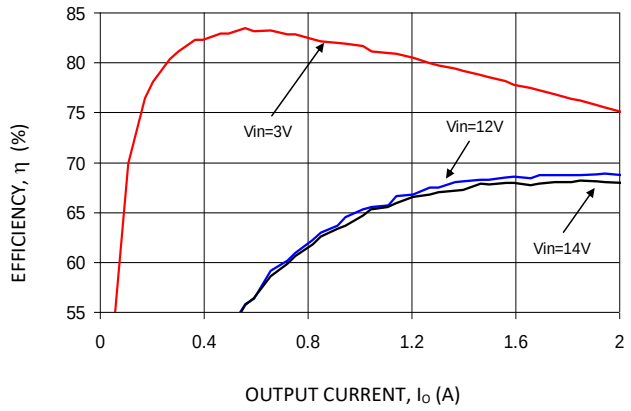

Figure 1. Vo = 0.6 V

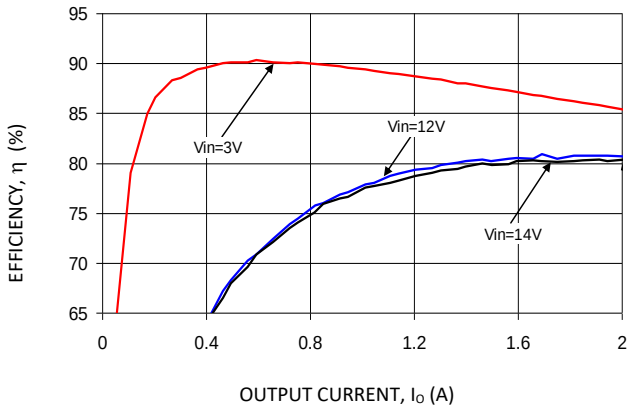

Figure 2. Vo = 1.2 V

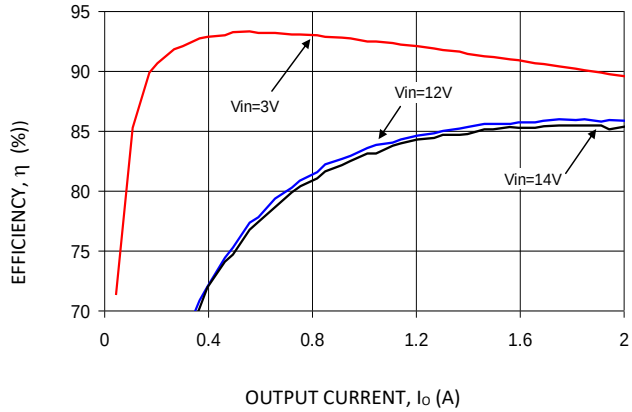

Figure 3. Vo = 1.8 V

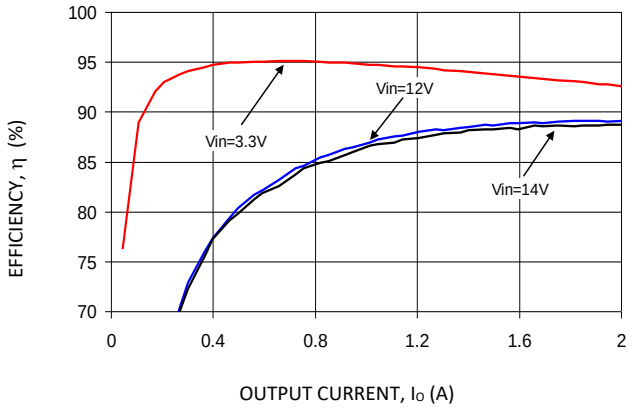

Figure 4. Vo = 2.5 V

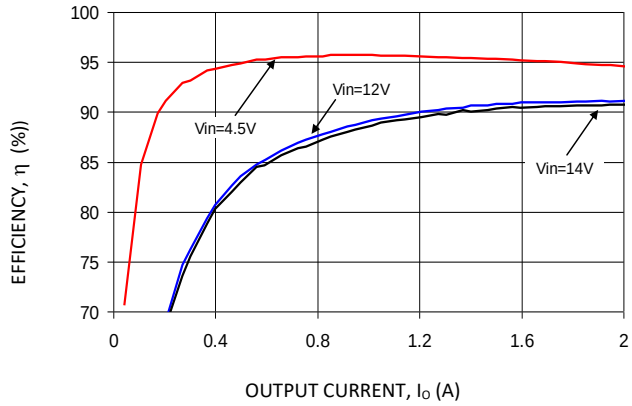

Figure 5. Vo = 3.3 V

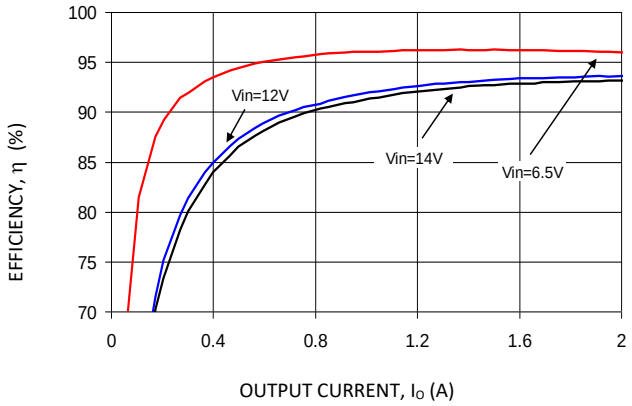

Figure 6. Vo = 5.0 V

© 2021 Bel Power Solutions & Protection

7. THERMAL DERATING CURVE

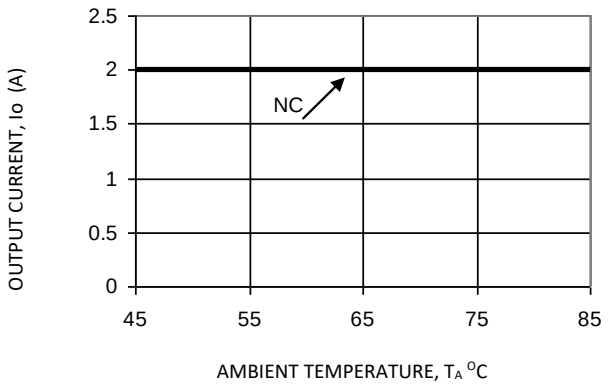

Figure 7. Vo = 0.6 V

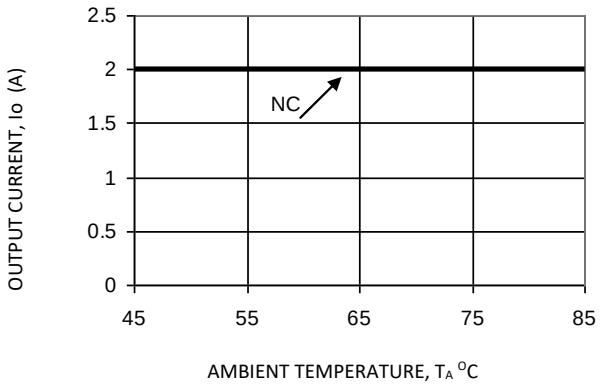

Figure 8. Vo = 1.2 V

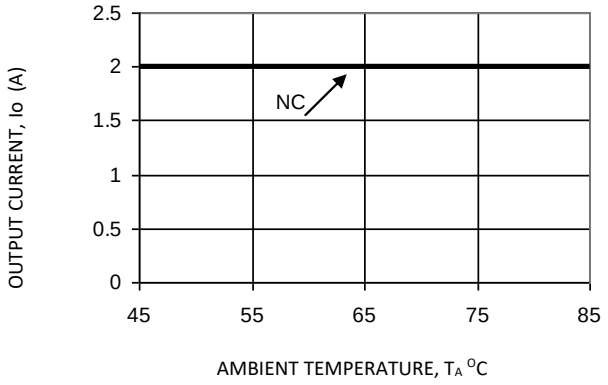

Figure 9. Vo = 1.8 V

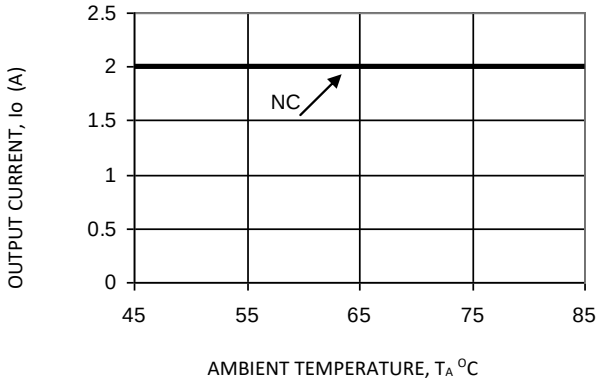

Figure 10. Vo = 2.5 V

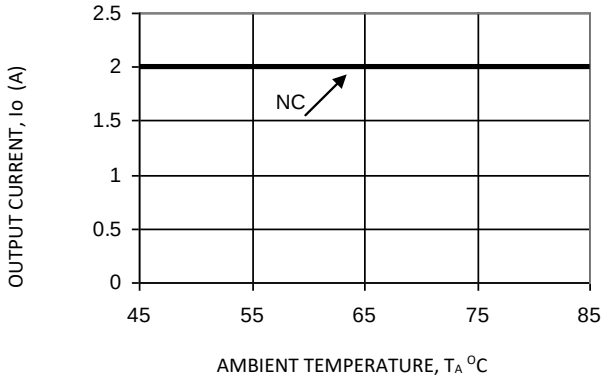

Figure 11. Vo = 3.3 V

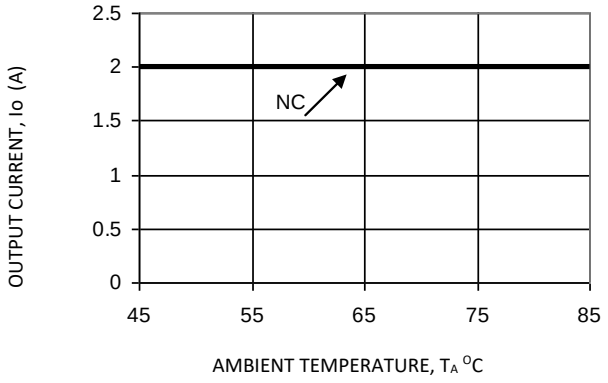

Figure 12. Vo = 5.0 V

8. RIPPLE AND NOISE WAVEFORMS

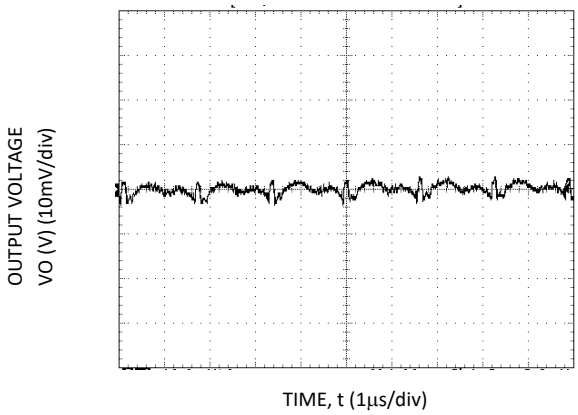

Figure 13. Vo = 0.6 V, Io = Io,max

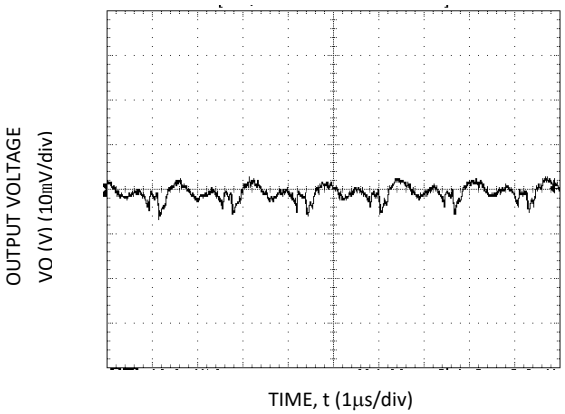

Figure 14. Vo = 1.2 V, Io = Io,max

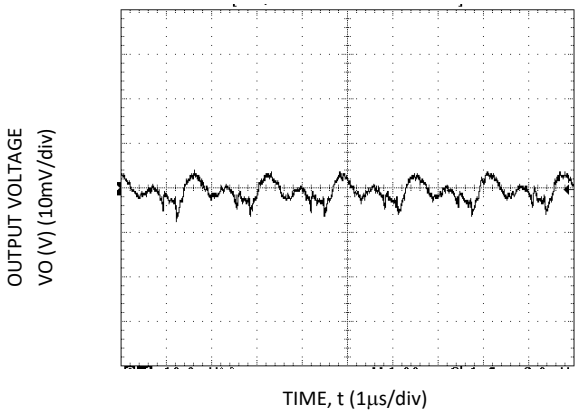

Figure 15. Vo = 1.8 V, Io = Io,max

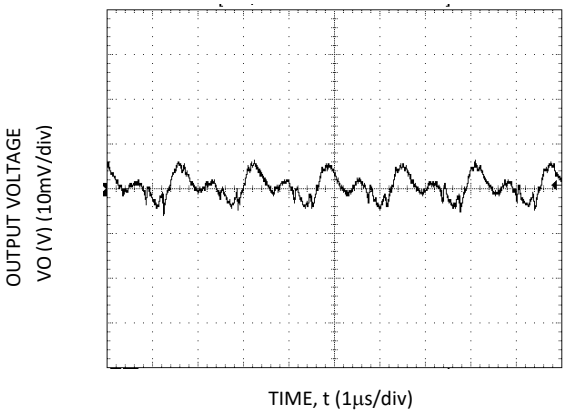

Figure 16. Vo = 2.5 V, Io = Io,max

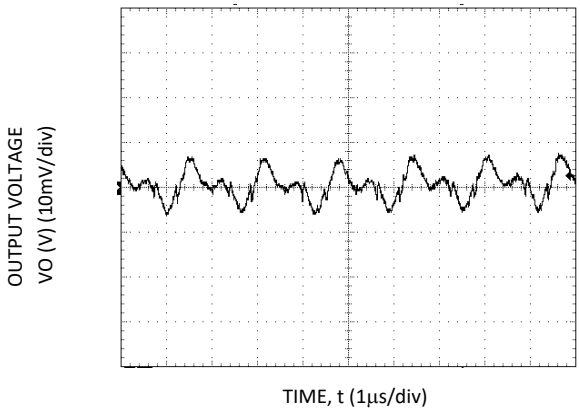

Figure 17. Vo = 3.3 V, Io = Io,max

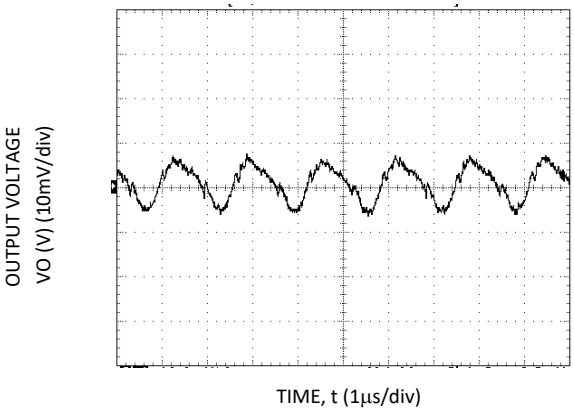

Figure 18. Vo= 5.0 V, Io = Io,max

© 2021 Bel Power Solutions & Protection

9. TRANSIENT RESPONSE WAVEFORMS

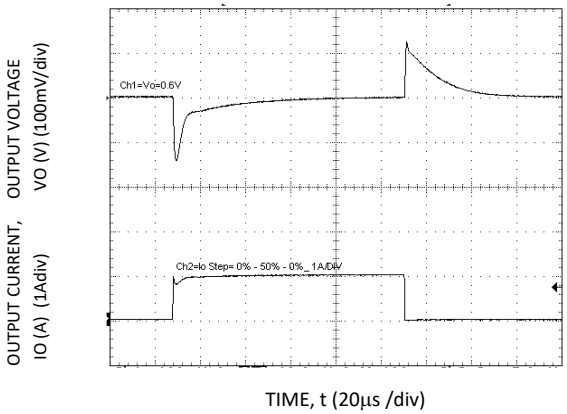

Figure 19. Transient Response to Dynamic Load Change from 0% 50% to 0%. Vo = 0.6 V

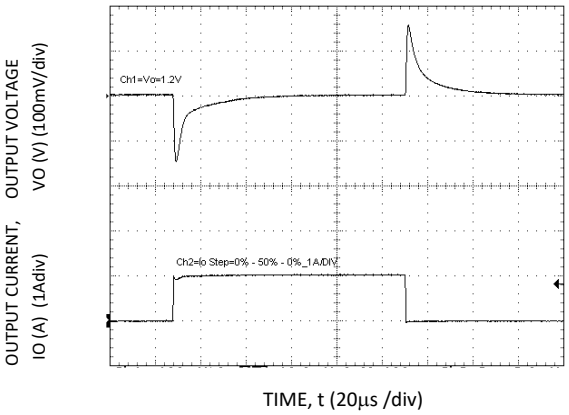

Figure 20. Transient Response to Dynamic Load Change from 0% 50% to 0%. Vo = 1.2 V

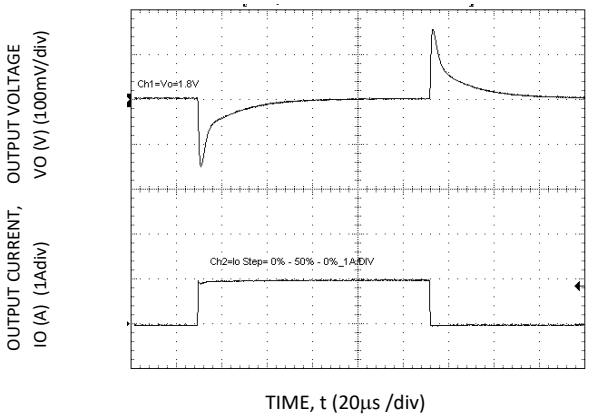

Figure 21. Transient Response to Dynamic Load Change from 0% 50% to 0%. Vo = 1.8 V

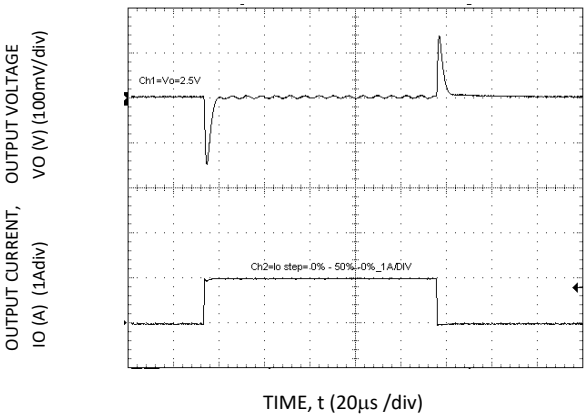

Figure 22. Transient Response to Dynamic Load Change from 0% 50% to 0%. Vo = 2.5 V

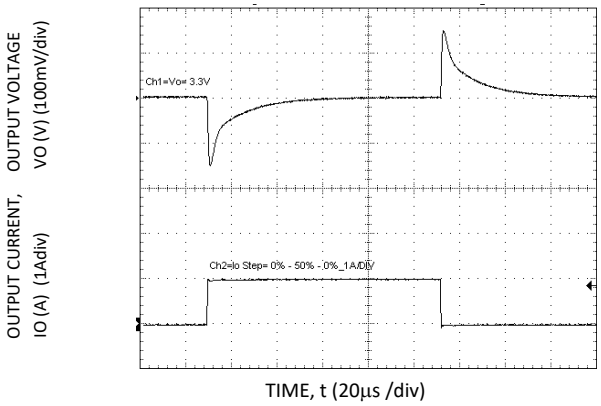

Figure 23. Transient Response to Dynamic Load Change from 0% 50% to 0%. Vo = 3.3 V

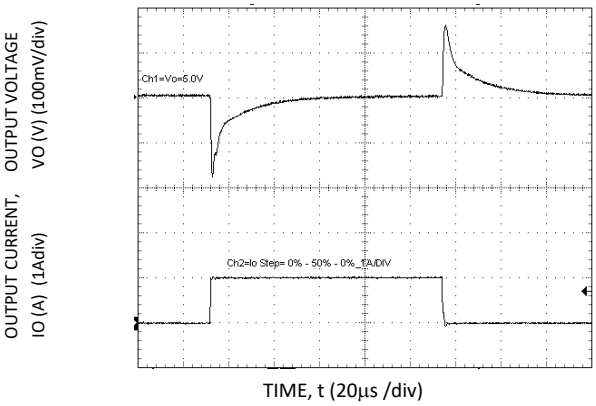

Figure 24. Transient Response to Dynamic Load Change from 0% 50% to 0%. Vo = 5.0 V

10. STARTUP TIME

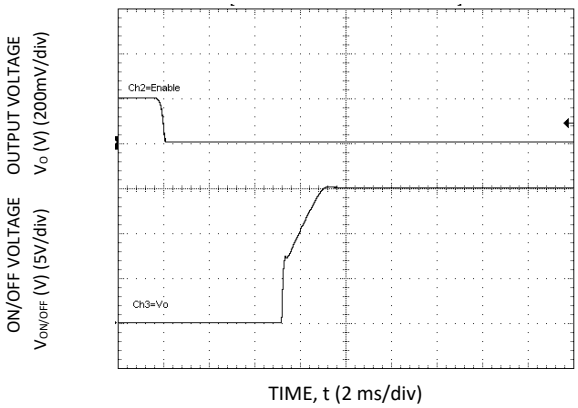

Figure 25. Start-up Using On/Off Voltage (Io = Io,max), Vo = 0.6 V

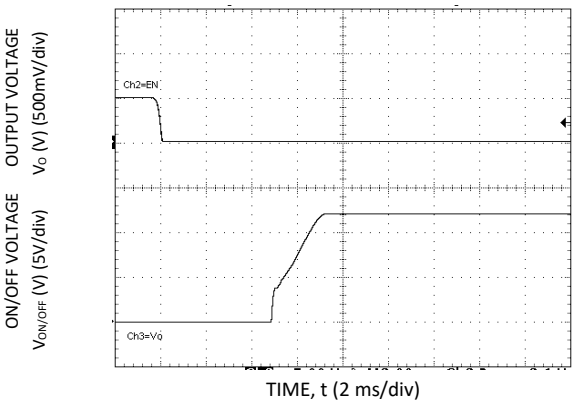

Figure 26. Start-up Using On/Off Voltage (Io = Io,max), Vo = 1.2 V

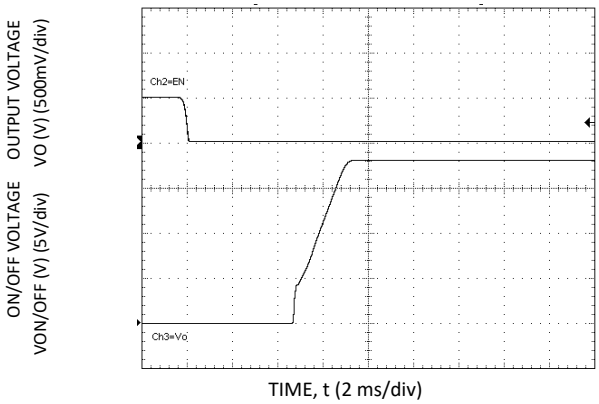

Figure 27. Start-up Using On/Off Voltage (Io = Io,max), Vo = 1.8 V

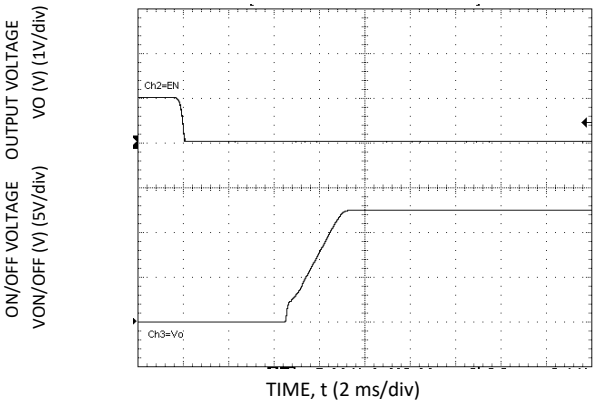

Figure 28. Start-up Using On/Off Voltage (Io = Io,max), Vo = 2.5 V

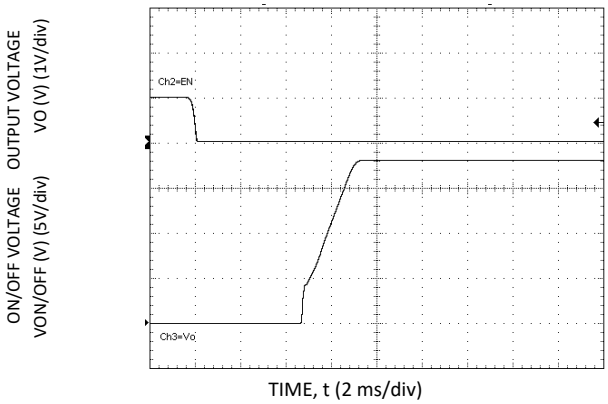

Figure 29. Start-up Using On/Off Voltage (Io = Io,max), Vo = 3.3 V

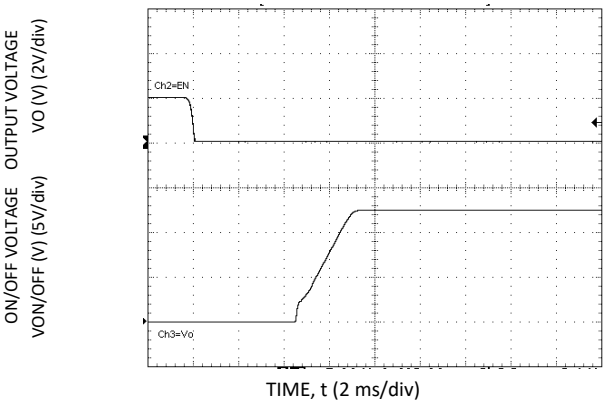

Figure 30. Start-up Using On/Off Voltage (Io =Io,max), Vo = 5.0 V

© 2021 Bel Power Solutions & Protection

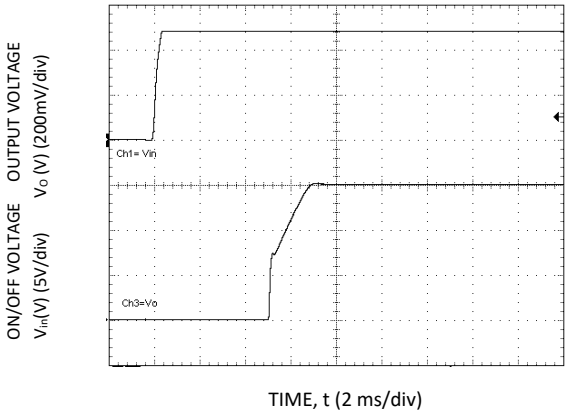

Figure 31. Start-up Using Input Voltage (VIN = 12 V, Io = Io,max), Vo = 0.6 V

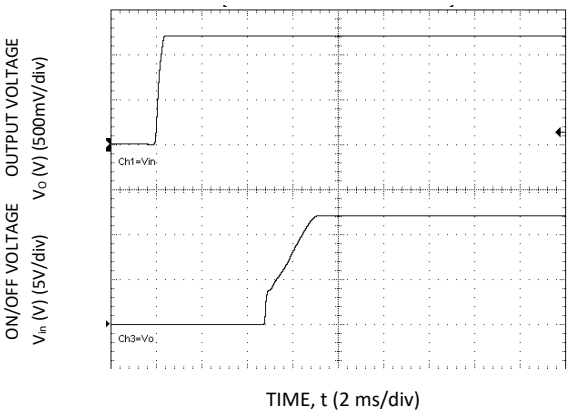

Figure 32. Start-up Using Input Voltage (VIN = 12 V, Io = Io,max), Vo = 1.2 V

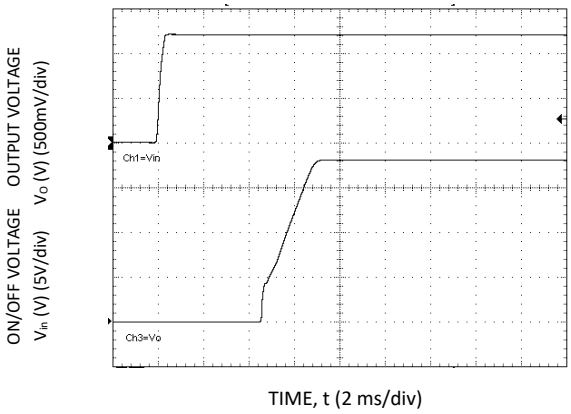

Figure 33. Start-up Using Input Voltage (VIN = 12 V, Io = Io,max), Vo = 1.8 V

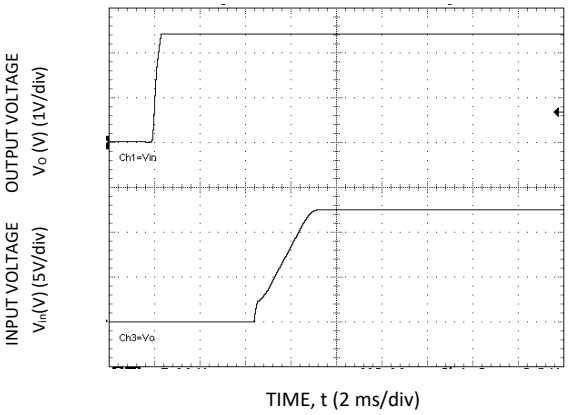

Figure 34. Start-up Using Input Voltage (VIN = 12 V, Io = Io,max), Vo = 2.5 V

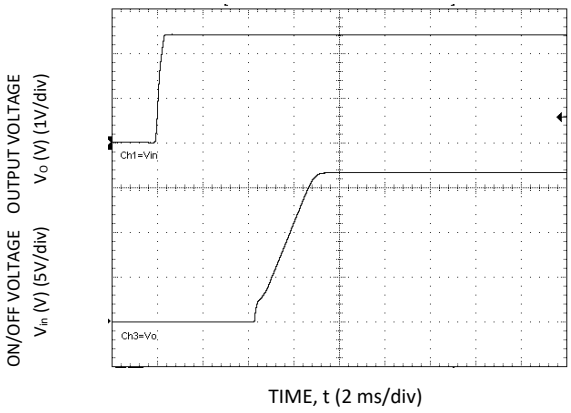

Figure 35. Start-up Using Input Voltage (VIN = 12 V, Io = Io,max), Vo = 3.3 V

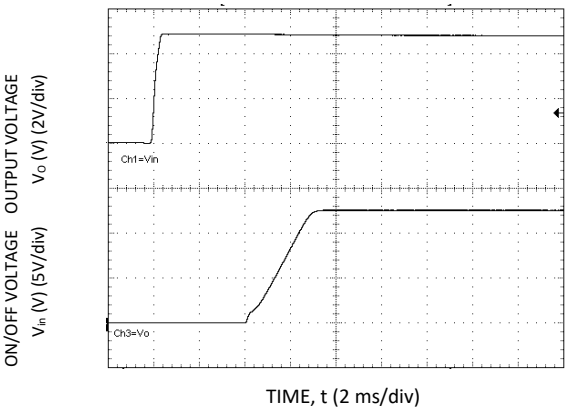

Figure 36. Start-up Using Input Voltage (VIN = 12 V, Io = Io,max), Vo = 5.0 V

11. TEST CONFIGURATIONS

Input Reflected Ripple Current Test Setup.

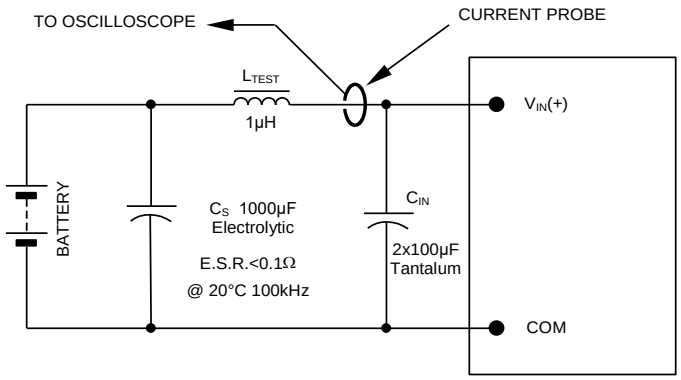

NOTE: Measure input reflected ripple current with a simulated source inductance (L_{TEST}) of 1µH. Capacitor C_S offsets possible battery impedance. Measure current as shown above.

Figure 37.

Output Ripple and Noise Test Setup

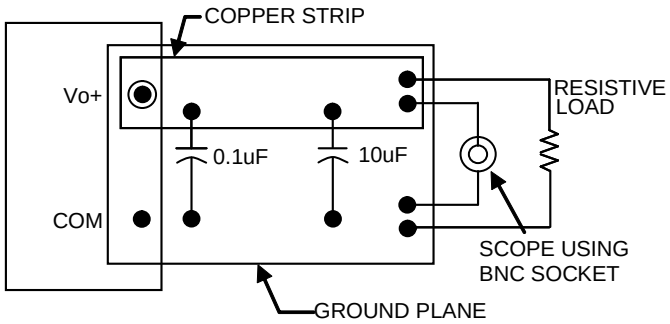

NOTE: All voltage measurements to be taken at the module terminals, as shown above. If sockets are used then Kelvin connections are required at the module terminals to avoid measurement errors due to socket contact resistance.

Figure 38.

© 2021 Bel Power Solutions & Protection

Output Voltage and Efficiency Test Setup

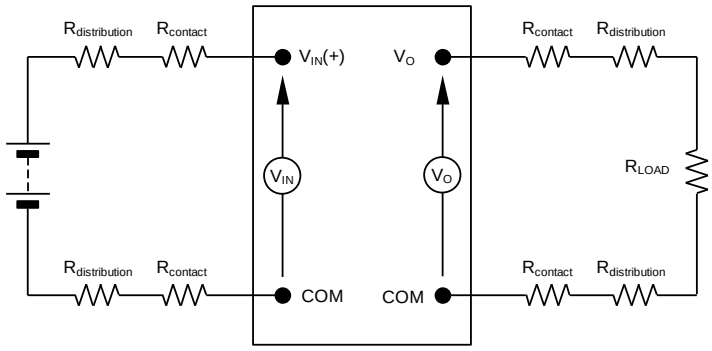

NOTE: All voltage measurements to be taken at the module terminals, as shown above. If sockets are used then Kelvin connections are required at the module terminals to avoid measurement errors due to socket contact resistance.

Figure 39.

$$\text{Efficiency} \quad \eta = \frac{V_O . I_O}{V_{IN} . I_{IN}} \times 100 \ \%$$

12. INPUT FILTERING

The SLIN-02E2AL module should be connected to a low ac-impedance source. A highly inductive source can affect the stability of the module. Input capacitance must be placed directly adjacent to the input pin of the module, to minimize input ripple voltage and ensure module stability.

To minimize input voltage ripple, ceramic capacitors are recommended at the input of the module. The figure below shows the input ripple voltage for various output voltages at 2 A of load current with 1x10 µF or 1x22 µF ceramic capacitors and an input of 5 V.

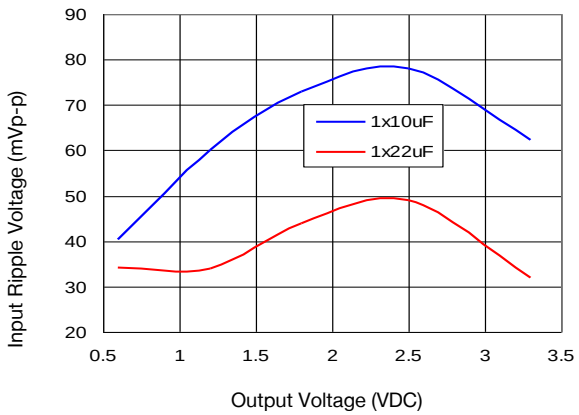

Figure 40.

The figure below shows the input ripple voltage for various output voltages at 2 A of load current with 1x10 µF or 1x22 µF ceramic capacitors and an input of 12 V.

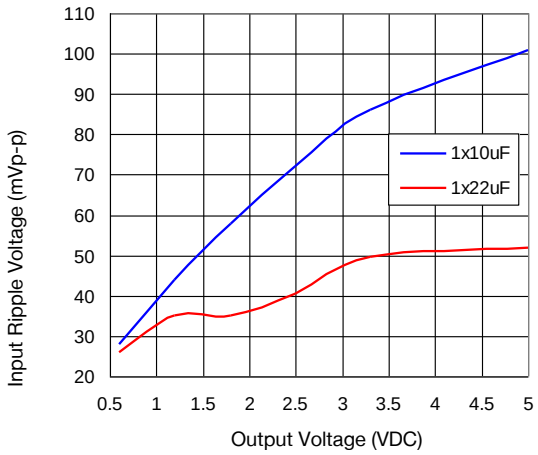

Figure 41.

13. OUTPUT FILTERING

The SLIN-02E2AL modules are designed for low output ripple voltage and will meet the maximum output ripple specification with 0.1 µF ceramic and 22 µF ceramic capacitors at the output of the module. However, additional output filtering may be required by the system designer for several reasons. First, there may be a need to further reduce the output ripple and noise of the module. Second, the dynamic response characteristics may need to be customized to a particular load step change.

To reduce the output ripple and improve the dynamic response to a step load change, additional capacitance at the output can be used. Low ESR polymer and ceramic capacitors are recommended to improve the dynamic response of the module. A minimum 22 µF External Cap must be used. The figure below provides output ripple information for different external capacitance values at various Vo and for a load current of 2 A. For stable operation of the module, limit the capacitance to less than the maximum output capacitance as specified in the electrical specification table. Optimal performance of the module can be achieved by using the Tunable Loop™ feature described later in this data sheet.

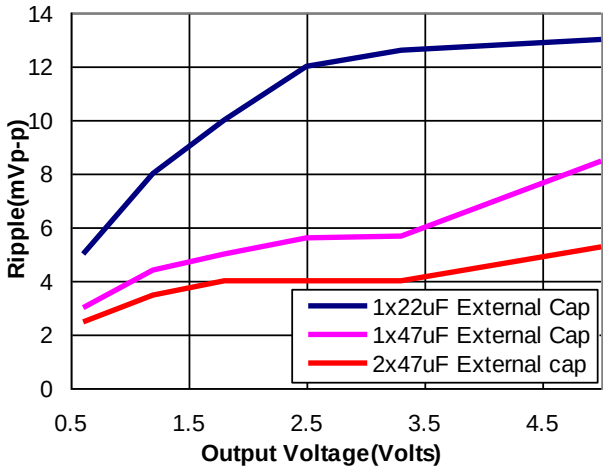

Figure 42.

Note: Output ripple voltage for various output voltages with external 1x22 µF, 1x47 µF, 2x47 µF ceramic capacitors at the output (2 A load). Input voltage is 12 V.

© 2021 Bel Power Solutions & Protection

14. SAFETY CONSIDERATIONS

For safety agency approval the power module must be installed in compliance with the spacing and separation requirements of the end-use safety agency standards, i.e., UL/CSA 62368-1, IEC/EN 62368-1.

For the converter output to be considered meeting the requirements of electrical energy source class 1 (ES1), the input must meet ES1 requirements.

The input to these units is to be provided with a fast-acting fuse with a maximum rating of 4 A in the positive input lead.

15. REMOTE ON/OFF

PARAMETER		DESCRIPTION	MIN	TYP	MAX	UNIT
Signal Low (Unit On)	Active Low	The remote on/off pin open, Unit on.	-0.2	-	0.3	V
Signal High (Unit Off)			3	-	Vin,max	V

The SLIN-02E2AL power modules feature an On/Off pin for remote On/Off operation. Two On/Off logic options are available. In the Positive Logic On/Off option, the module turns ON during a logic High on the On/Off pin and turns OFF during a logic Low. With the Negative Logic On/Off option, the module turns OFF during logic High and ON during logic Low. The On/Off signal is always referenced to ground. For either On/Off logic option, leaving the On/Off pin disconnected will turn the module ON when input voltage is present.
For positive logic modules, the circuit configuration for using the On/Off pin is shown in the figure below.

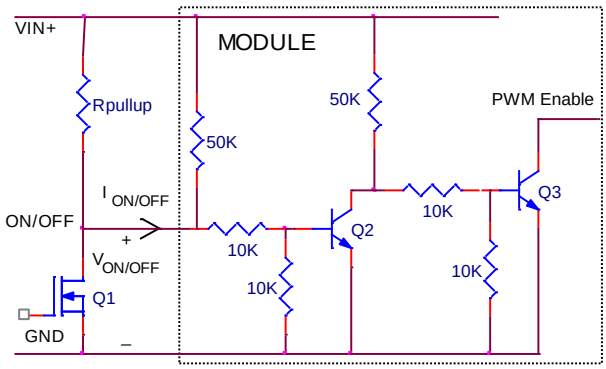

Figure 43. Circuit configuration for using positive On/Off logic

For negative logic On/Off modules, the circuit configuration is shown below.

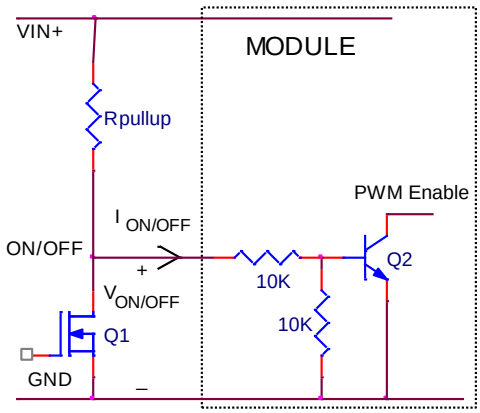

Figure 44. Circuit configuration for using negative On/Off logic

16. OVER CURRENT PROTECTION

To provide protection in a fault (output overload) condition, the unit is equipped with internal current-limiting circuitry and can endure current limiting continuously. At the point of current-limit inception, the unit enters hiccup mode. The unit operates normally once the output current is brought back into its specified range.

17. OVER TEMPERATURE PROTECTION

To provide protection in a fault condition, the unit is equipped with a thermal shutdown circuit. The unit will shut down if the over temperature threshold of 140°C is exceeded at the thermal reference point Tref . The thermal shutdown is not intended as a guarantee that the unit will survive temperatures beyond its rating. Once the unit goes into thermal shutdown it will then wait to cool before attempting to restart.

18. INPUT UNDER-VOLTAGE LOCKOUT

At input voltages below the input under voltage lockout limit, the module operation is disabled. The module will begin to operate at an input voltage above the under-voltage lockout turn-on threshold.

19. OUTPUT VOLTAGE PROGRAMMING

The output voltage of the SLIN-02E2AL module can be programmed to any voltage from 0.6 to 5.5 VDC by connecting a resistor between the Trim and GND pins of the module. Certain restrictions apply on the output voltage set point depending on the input voltage. These are shown in the Output Voltage vs. Input Voltage Set Point Area plot below. The Lower Limit curve shows that for output voltages of 2.4 V and higher, the input voltage needs to be larger than the minimum of 3 V.

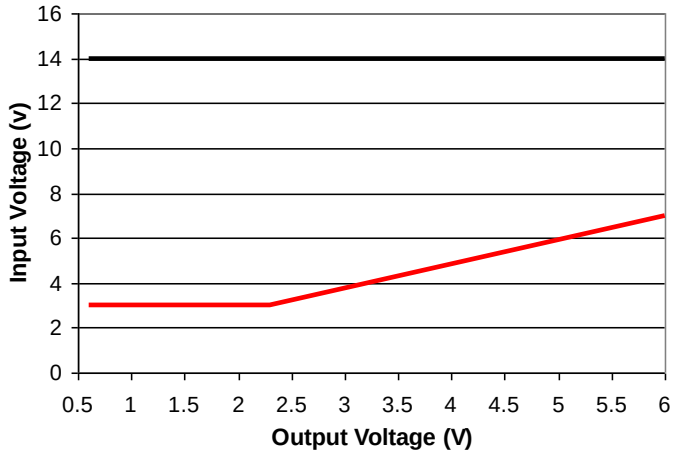

Figure 45. Output Voltage vs. Input Voltage Set Point Area plot showing limits where the output voltage can be set for different input voltages.

© 2021 Bel Power Solutions & Protection

20. OUTPUT TRIM EQUATIONS

Without an external resistor between Trim and GND pins, the output of the module will be 0.6 VDC. To calculate the value of the trim resistor, Rtrim for a desired output voltage, use the following equation:

$$Rtrim = \left[\frac{6.0}{(Vo - 0.6)} \right] k\Omega$$

Rtrim is the external resistor in KΩ
Vo is the desired output voltage.

Table 1 provides Rtrim values required for some common output voltages.

Table 1

VO, set (V)	Rtrim (KΩ)
1.0	15
1.2	10
1.5	6.67
1.8	5
2.5	3.16
3.3	2.22
5.0	1.36

By using a ±0.5% tolerance trim resistor with a TC of ±100 ppm, a set point tolerance of ±1.5% can be achieved as specified in the electrical specification.

21. REMOTE SENSE

The SLIN-02E2AL power modules have a Remote Sense feature to minimize the effects of distribution losses by regulating the voltage at the SENSE pin. The voltage between the SENSE pin and VOUT pin must not exceed 0.5 V. Note that the output voltage of the module cannot exceed the specified maximum value. This includes the voltage drop between the SENSE and Vout pins. When the Remote Sense feature is not being used, connect the SENSE pin to the VOUT pin.

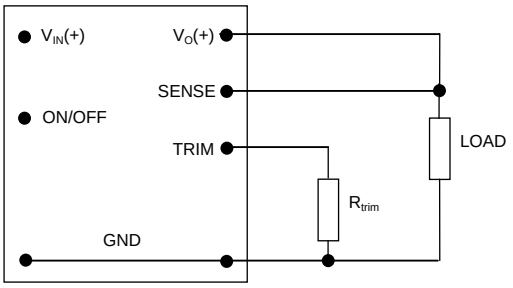

Figure 46. Circuit configuration for programming output voltage using an external resistor

22. VOLTAGE MARGINING

Output voltage margining can be implemented in the SLIN-02E2AL modules by connecting a resistor, $R_{margin-up}$, from the Trim pin to the ground pin for margining-up the output voltage and by connecting a resistor, $R_{margin-down}$, from the Trim pin to output pin for margining-down.

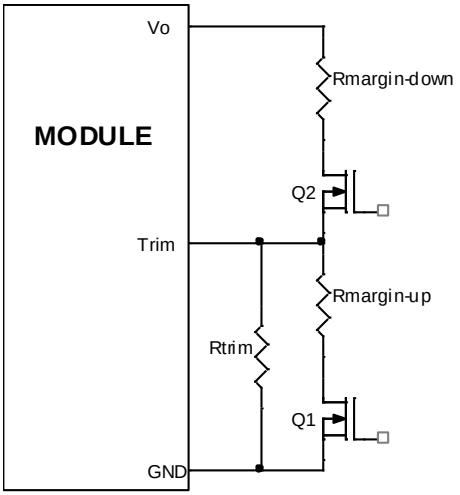

Figure 47. Circuit Configuration for margining Output voltage

23. MONOTONIC START-UP AND SHUTDOWN

The SLIN-02E2AL modules have monotonic start-up and shutdown behavior for any combination of rated input voltage, output current and operating temperature range.

24. STARTUP INTO PRE-BIASED OUTPUT

The SLIN-02E2AL modules can start into a pre-biased output as long as the pre-bias voltage is 0.5 V less than the set output voltage.

25. POWER GOOD

The SLIN-02E2AL modules provide a Power Good (PGOOD) signal that is implemented with an open-drain output to indicate that the output voltage is within the regulation limits of the power module. The PGOOD signal will be de-asserted to a low state if any condition such as over temperature, over current or loss of regulation occurs that would result in the output voltage going ±12.5% outside the set-point value. The PGOOD terminal should be connected through a pull-up resistor (suggested value 100 kΩ) to a source of 5 VDC or lower.

© 2021 Bel Power Solutions & Protection

26. TUNABLE LOOP™

The SLIN-02E2AL modules have a new feature that optimizes transient response of the module called Tunable Loop™.

External capacitors are usually added to the output of the module for two reasons: to reduce output ripple and noise and to reduce output voltage deviations from the steady-state value in the presence of dynamic load current changes. Adding external capacitance however affects the voltage control loop of the module, typically causing the loop to slow down with sluggish response. Larger values of external capacitance could also cause the module to become unstable.
The Tunable Loop™ allows the user to externally adjust the voltage control loop to match the filter network connected to the output of the module. The Tunable Loop™ is implemented by connecting a series R-C between the SENSE and TRIM pins of the module, as shown in below. This R-C allows the user to externally adjust the voltage loop feedback compensation of the module.

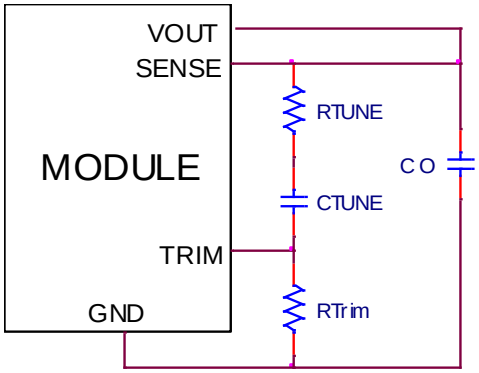

Figure 48. Circuit diagram showing connection of R_{TUME} and C_{TUNE} to tune the control loop of the module

Recommended values of R_{TUNE} and C_{TUNE} for different output capacitor combinations are given in Tables 2 and 3. Table 2 shows the recommended values of R_{TUNE} and C_{TUNE} for different values of ceramic output capacitors up to 470 µF that might be needed for an application to meet output ripple and noise requirements. Selecting R_{TUNE} and C_{TUNE} according to Table 2 will ensure stable operation of the module.

In applications with tight output voltage limits in the presence of dynamic current loading, additional output capacitance will be required. Table 3, 4, and 5 list recommended values of R_{TUNE} and C_{TUNE} in order to meet 2% output voltage deviation limits for some common output voltages in the presence of a 1 A to 2 A step change (50% of full load), with an input voltage of 12 V, 5 V, and 3.3 V, respectively.

Co	1x47 µF	2x47 µF	3x47 µF	4x47 µF	10x47 µF
R_{TUNE}	220 Ω	150 Ω	100 Ω	100 Ω	100 Ω
C_{TUNE}	3900 pF	10 nF	18 nF	18 nF	22 nF

Table 2. General recommended values of of R_{TUNE} and C_{TUNE} for Vin=12 V/5 V/3.3 V and various external ceramic capacitor combinations.

Vo	5 V	3.3 V	2.5 V	1.8 V	1.2 V	0.6 V
Co	1x22 µF	1x47 µF	2x47 µF	2x47 µF	3x47 µF	330 µF Polymer
R_{TUNE}	220 Ω	220 Ω	150 Ω	150 Ω	100 Ω	100 Ω
C_{TUNE}	2200 pF	3900 pF	10 nF	10 nF	18 nF	68 nF
ΔV	81 mV	61 mV	35 mV	34 mV	23 mV	12 mV

Table 3. Recommended values of R_{TUNE} and C_{TUNE} to obtain transient deviation of ≤ 2% of Vout for a 1A step load with Vin = 12 V.

Vo	3.3 V	2.5 V	1.8 V	1.2 V	0.6 V
Co	1x47 µF	2x47 µF	2x47 µF	3x47 µF	330 µF Polymer
R_{TUNE}	220 Ω	150 Ω	150 Ω	100 Ω	100 Ω
C_{TUNE}	3900 pF	10 nF	10 nF	18 nF	68 nF
ΔV	62 mV	35 mV	34 mV	23 mV	12 mV

Table 4. Recommended values of R_{TUNE} and C_{TUNE} to obtain transient deviation of ≤ 2% of Vout for a 1 A step load with Vin = 5 V.

Vo	2.5 V	1.8 V	1.2 V	0.6 V
Co	3x47 µF	2x47 µF	3x47 µF	330 µF Polymer
R_{TUNE}	100 Ω	150 Ω	100 Ω	100 Ω
C_{TUNE}	18 nF	10 nF	18 nF	68 nF
ΔV	48 mV	34 mV	23 mV	12 mV

Table 5. Recommended values of R_{TUNE} and C_{TUNE} to obtain transient deviation of ≤ 2% of Vout for a 1 A step load with Vin = 3.3 V.

27. THERMAL CONSIDERATIONS

Power modules operate in a variety of thermal environments; however, sufficient cooling should always be provided to help ensure reliable operation.

Considerations include ambient temperature, airflow, module power dissipation, and the need for increased reliability. A reduction in the operating temperature of the module will result in an increase in reliability. The thermal data presented here is based on physical measurements taken in a wind tunnel.

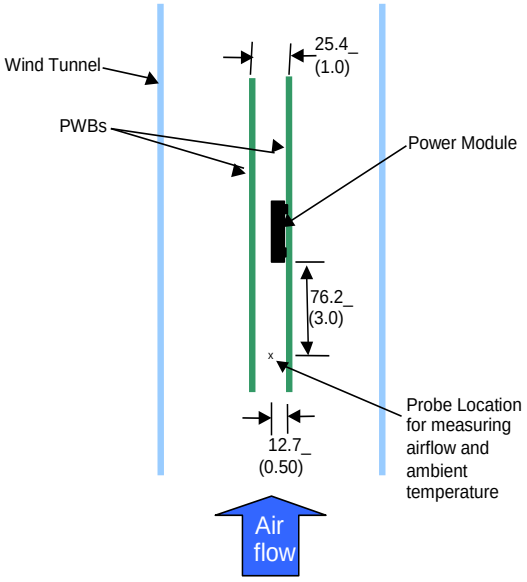

Figure 49. Thermal Test Setup

© 2021 Bel Power Solutions & Protection

The thermal reference points, Tref used in the specifications are also shown below. For reliable operation the temperatures at these points should not exceed 140°C. The output power of the module should not exceed the rated power of the module (Vo,set x Io,max).

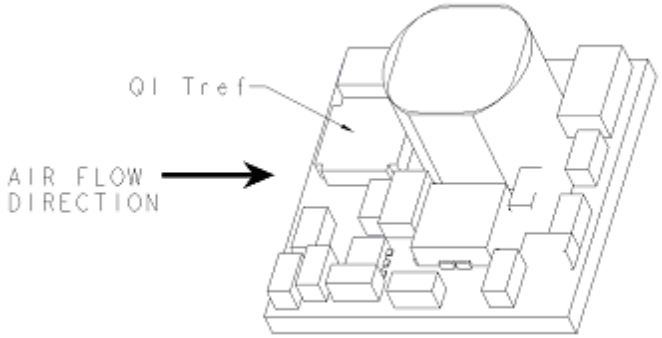

Figure 50. Preferred airflow direction and location of hot spot of the module (Tref).

28. EXAMPLE APPLICATION CIRCUIT

Requirements:

Vin:	12 V
Vout:	1.8 V
Iout:	1 A max., worst case load transient is from 1 A to1.5 A
ΔVout:	1.5% of Vout (27 mV) for worst case load transient
Vin, ripple	1.5% of Vin (180 mV, p-p)

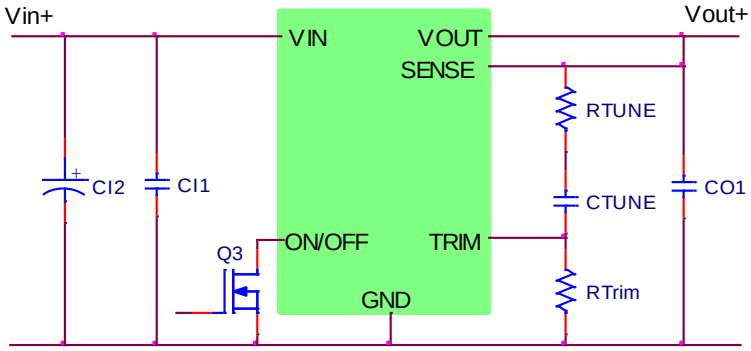

Figure 51.

CI1	1x10 µF/16 V ceramic capacitor (e.g. TDK C Series)
CI2	100 µF/16 V bulk electrolytic
CO1	2x47 µF/6.3 V ceramic capacitor (e.g. TDK C Series, Murata GRM32ER60J476ME20)
Ctune	5600 pF ceramic capacitor (can be 1206, 0805 or 0603 size)
Rtune	150 Ω SMT resistor (can be 1206, 0805 or 0603 size)
Rtrim	5 kΩ SMT resistor (can be 1206, 0805 or 0603 size, recommended tolerance of 0.1%)

29. MECHANICAL DIMENSIONS

OUTLINE

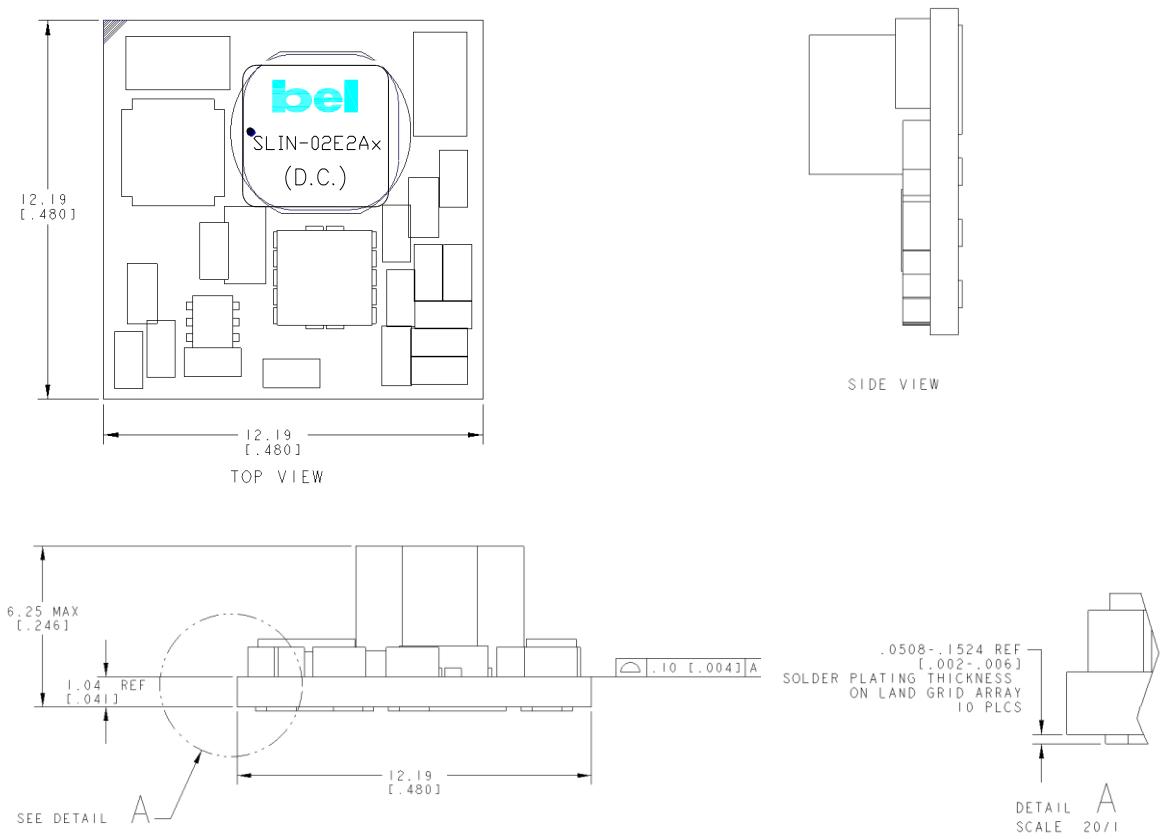

Figure 52. Outline

Dimensions are in millimeter [inch].
Tolerances: x.x mm ± 0.5 mm [0.02 inch] [unless otherwise indicated]
x.xx mm ± 0.25 mm [0.010 inch]

Note: This module is recommended and compatible with Pb-Free Reflow Soldering and must be soldered using a reflow profile with a peak temperature of no more than 260 °C for less than 5 seconds.

© 2021 Bel Power Solutions & Protection

PIN CONNECTIONS

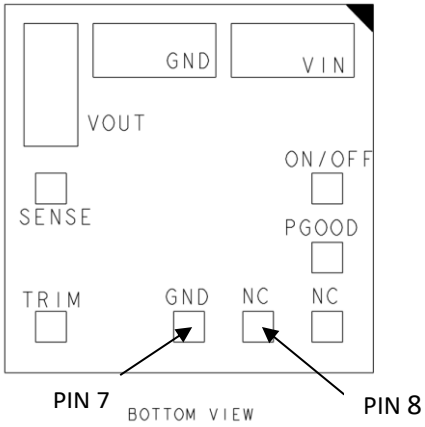

Figure 53. Pins

PIN	FUNCTION	PIN	FUNCTION
1	ON/OFF	6	TRIM
2	VIN	7	GND
3	GND	8	NC
4	VOUT	9	NC
5	SENSE	10	PGOOD

RECOMMENDED PAD LAYOUT

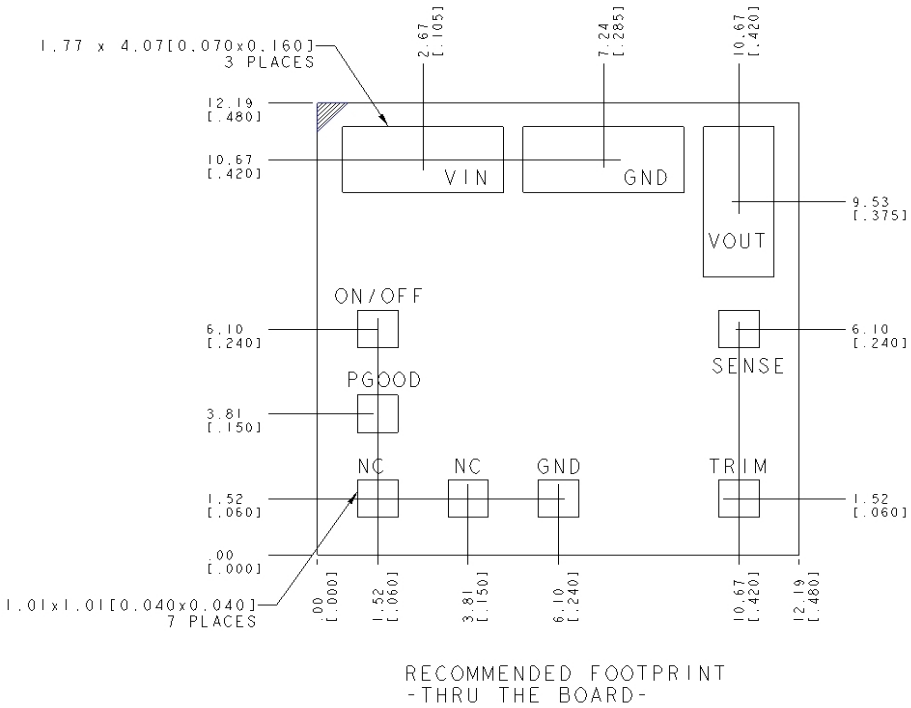

Figure 54. Recommended pad layout

30. PACKAGING DETAILS

The SLIN-02E2AL modules are supplied in tape & reel as standard.

All Dimensions are in millimeter [inch].

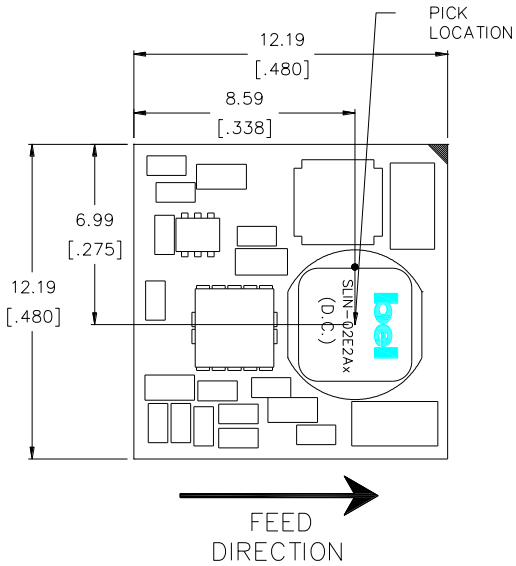

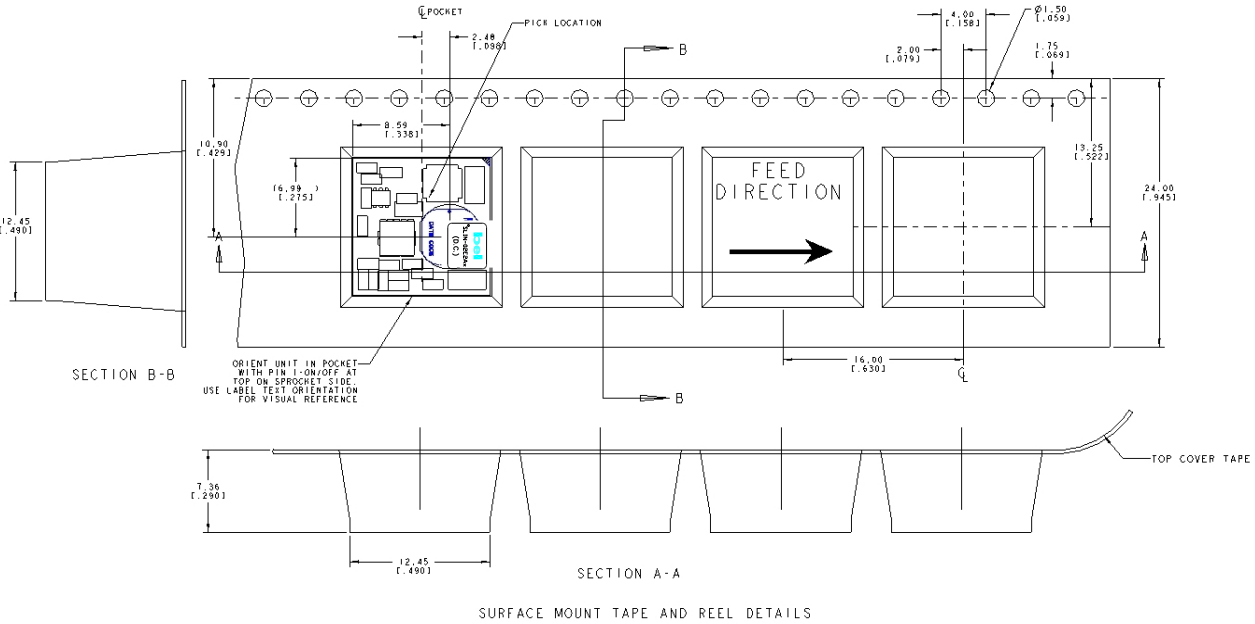

Figure 55.

Reel Dimensions:

Outside Dimensions:	330.2 mm [13.00 inch]
Inside Dimensions:	177.8 mm [7.00 inch]
Tape Width:	24.00 mm [0.945 inch]

© 2021 Bel Power Solutions & Protection

31. SURFACE MOUNT INFORMATION

PICK AND PLACE

The SLIN-02E2AL modules use an open frame construction and are designed for a fully automated assembly process. The modules are fitted with a label designed to provide a large surface area for pick and place operations. The label meets all the requirements for surface mount processing, as well as safety standards, and is able to withstand reflow temperatures of up to 300°C. The label also carries product information such as part number and serial number.

NOZZLE RECOMMENDATIONS

The module weight has been kept to a minimum by using open frame construction. Variables such as nozzle size, tip style, vacuum pressure and placement speed should be considered to optimize this process. The minimum recommended inside nozzle diameter for reliable operation is 3mm. The maximum nozzle outer diameter, which will safely fit within the allowable component spacing, is 7 mm.

LEAD FREE SOLDERING

The SLIN-02E2AL modules are lead-free (Pb-free) and RoHS compliant and fully compatible in a Pb-free soldering process. Failure to observe the instructions below may result in the failure of or cause damage to the modules and can adversely affect long-term reliability.

PB-FREE REFLOW PROFILE

Power Systems will comply with J-STD-020 Rev. C (Moisture/Reflow Sensitivity Classification for Nonhermetic Solid State Surface Mount Devices) for both Pb-free solder profiles and MSL classification procedures. This standard provides a recommended forced-air-convection reflow profile based on the volume and thickness of the package. The suggested Pb-free solder paste is Sn/Ag/Cu (SAC). The recommended linear reflow profile using Sn/Ag/Cu solder is shown in the figure below. Soldering outside of the recommended profile requires testing to verify results and performance

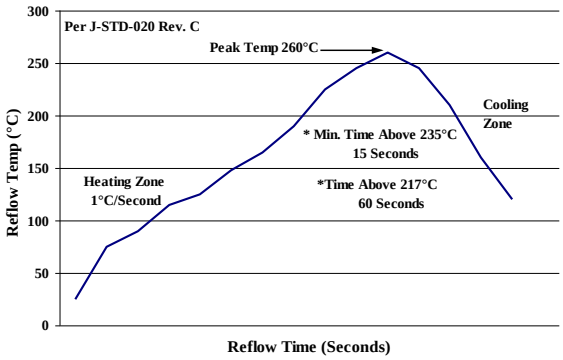

Figure 56. Recommended linear reflow profile using Sn/Ag/Cu solder.

MSL RATING

The SLIN-02E2AL modules have a MSL rating of 2A.

STORAGE AND HANDLING

The recommended storage environment and handling procedures for moisture-sensitive surface mount packages is detailed in J-STD-033 Rev. A (Handling, Packing, Shipping and Use of Moisture/Reflow Sensitive Surface Mount Devices). Moisture barrier bags (MBB) with desiccant are required for MSL ratings of 2 or greater. These sealed packages should not be broken until time of use. Once the original package is broken, the floor life of the product at conditions of ≤ 30°C and 60% relative humidity varies according to the MSL rating (see J-STD-033A). The shelf life for dry packed SMT packages will be a minimum of 12 months from the bag seal date, when stored at the following conditions: < 40° C, < 90% relative humidity.

POST SOLDER CLEANING AND DRYING CONSIDERATIONS

Post solder cleaning is usually the final circuit-board assembly process prior to electrical board testing. The result of inadequate cleaning and drying can affect both the reliability of a power module and the testability of the finished circuit-board assembly.

Asia-Pacific +86 755 298 85888
Europe, Middle East +353 61 49 8941
North America +1 866 513 2839

© 2021 Bel Power Solutions & Protection

32. REVISION HISTORY

DATE	REVISION	CHANGES DETAIL	APPROVAL
2010-11-19	A	First release.	T. Bubriski
2011-01-14	B	Updated Table 3; Added Tables 4 and 5.	T. Bubriski
2012-06-18	C	Add acute point.	T. Bubriski
2015-07-17	D	Update Part Selection, MSL Rating.	XF.Jiang
2017-10-15	AE	Updated the form.	J.Yao
2021-06-21	AF	Add object ID and module photo. Update safety certificate and altitude.	XF.Jiang

For more information on these products consult: tech.support@psbel.com

NUCLEAR AND MEDICAL APPLICATIONS - Products are not designed or intended for use as critical components in life support systems, equipment used in hazardous environments, or nuclear control systems.
TECHNICAL REVISIONS - The appearance of products, including safety agency certifications pictured on labels, may change depending on the date manufactured. Specifications are subject to change without notice.