PTU2000-12-074ND

DC-DC Front-End Power Supply

The PTU2000-12-074NDis a 2000 Watt DC to DC power supply that converts -40 to -72 VDC voltage into an isolated main output of +12 VDC for powering intermediate bus architectures (IBA) in high performance and reliability servers, routers, and network switches.

The PTU2000-12-074ND utilizes full digital control architecture for greater efficiency, control, and functionality.

This power supply meets international safety standards.

RoHS Compliant

Key Features & Benefits

- Best-in-class, “Platinum” efficiency
- Wide input voltage range: -40 to -72 VDC
- Always-On 12 V / 3 A / 36 W standby output
- Hot-plug capable
- Parallel operation with active current sharing
- Full digital controls for improved performance
- High density design: 40 W/in^3
- Small form factor: 140 x 73.5 x 80 mm (5.51 x 2.89 x 3.15 in)
- Power Management Bus communication interface for control, programming and monitoring
- Status LED with fault signaling

Applications

- Networking Switches
- Servers & Routers
- Telecommunications

bel POWER SOLUTIONS & PROTECTION
a bel group

belfuse.com/power-solutions

Please read our datasheet & drawing disclaimer here.

1. ORDERING INFORMATION

PTU	2000	-	12	-	074	x	D	x
Product Family	**Power Level**	**Dash**	**V1 Output**	**Dash**	**Width**	**Airflow**	**Input**	**DC Inlet**
PTU Front-Ends	2000 W		12 V		74 mm	N: Normal	D: DC	-

2. OVERVIEW

The PTU2000-12-074ND DC/DC power supply is a fully DSP controlled, highly efficient front-end power supply. It incorporates state-of-the art technology and uses an interleaved forward converter topology with active clamp and synchronous rectification to reduce component stresses, thus providing increased system reliability and very high efficiency.
With a wide input DC voltage range the PTU2000-12-074ND maximizes power availability in demanding server, network, and other high availability applications. The supply is fan cooled and ideally suited for integration with a matching airflow path.

An active OR-ing device on the output ensures no reverse load current and renders the supply ideally suited for operation in redundant power systems.

The always-on standby output provides power to external power distribution and management controllers. It is protected with an active OR-ing device for maximum reliability.
Status information is provided with a front-panel LED. In addition, the power supply can be controlled and the fan speed set via the I^2C bus. The I^2C bus allows full monitoring of the supply, including input and output voltage, current, power, and inside temperatures. Cooling is managed by a fan controlled by the DSP controller. The fan speed is adjusted automatically depending on the actual power demand and supply temperature and can be overridden through the I^2C bus.

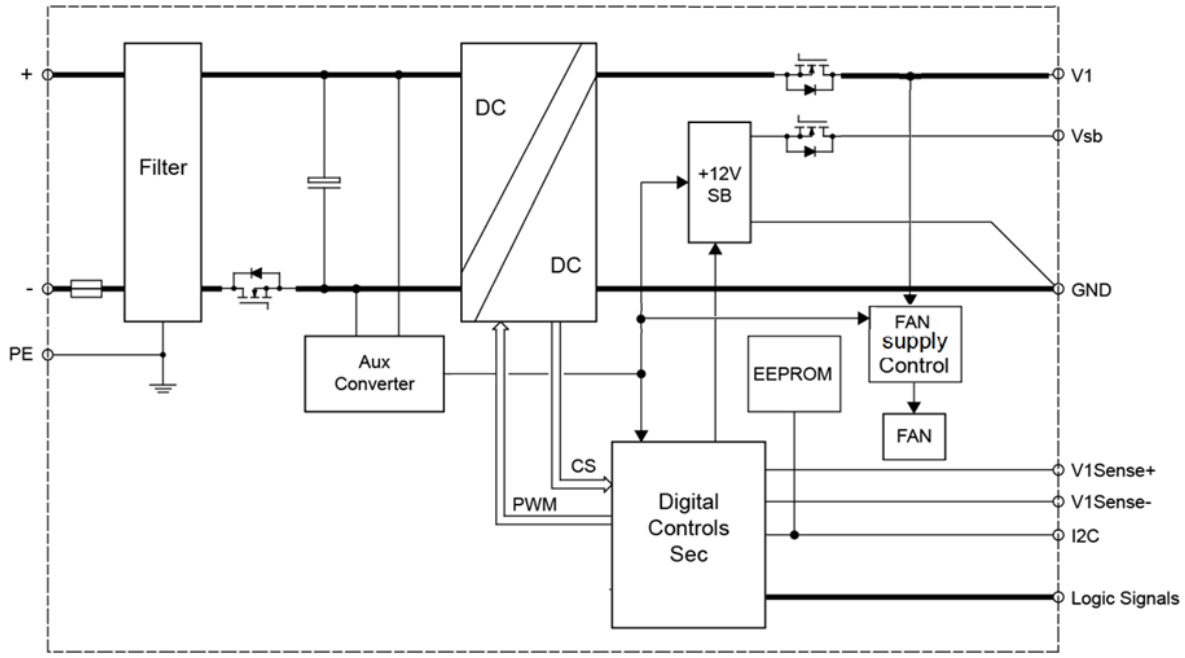

Figure 1. Block Diagram

3. ABSOLUTE MAXIMUM RATINGS

Stresses in excess of the absolute maximum ratings may cause performance degradation, adversely affect long-term reliability and cause permanent damage to the supply.

PARAMETER		CONDITIONS / DESCRIPTION	MIN	MAX	UNITS
Vi max	Maximum Input Voltage	Continuous		-72	VDC

4. INPUT

General Condition: T_A = 0…50 °C (PTU2000-12-074ND), unless otherwise noted.

PARAMETER		DESCRIPTION / CONDITION	MIN	NOM	MAX	UNIT
Vi start	Minimum Operating Input Voltage	Stand-by output available, DSP running	-32			VDC
Vi nom	Nominal Input Voltage			-48/-60		VDC
Vi	Input Voltage	Operation Voltage from Vi min to Vi max	-40		-72	VDC
Ii	Input Current	Vi > Vi min				A
Ii pk	Inrush Current Limitation	From Vi min to Vi max, T_A = 25°C, turn on		40	55	A
Vi on	Turn-On Standby Input Voltage	Ramping up	-30			VDC
Vi on	Turn-On Input Voltage	Ramping up	-41		-42	VDC
Vi off	Turn-Off Input Voltage	Ramping down	-38.0		-39.5	VDC
η	Efficiency	Vi = -53 VDC; 20% load		93		%
		Vi = -53 VDC; 50% load		95		%
		Vi = -53 VDC; 100% load		93		%
Thold_V1	Hold-Up Time V1	167 A on I1, 2.5 A on Vsb with 2,200 µF of Load capacitance	5	6		ms
Thold_sb	Hold-Up Time Vsb	167 A on I1, 2.5 A on Vsb with 2,200 µF of Load capacitance	5	10		ms

4.1 INPUT FUSE

A fast-acting 80 A input fuse in the negative voltage path inside the power supply protect against severe defects. The fuse is not accessible from the outside and are therefore not serviceable parts.

4.2 INRUSH CURRENT

Internal bulk capacitors will be charged through resistors connected from bulk cap minus pin to the DC rail minus, thus limiting the inrush current. After the inrush phase, NTC resistors are then shorted with MOSFETs connected in parallel. The Inrush control is managed by the digital controller (DSP).

4.3 INPUT UNDER-VOLTAGE

If the value of input DC voltage stays below the input under voltage lockout threshold Vi on, the supply will be inhibited. Once the input voltage returns within the normal operating range, the supply will return to normal operation again. If the input voltage stays below the input undervoltage lockout threshold Vi on, the supply will be inhibited. Once the input voltage returns within the normal operating range, the supply will return to normal operation again.

© 2019 Bel Power Solutions & Protection

5. OUTPUT

General Condition: T_A = 0…50 °C (PTU2000-12-074ND), unless otherwise noted.

PARAMETER		DESCRIPTION / CONDITION	MIN	NOM	MAX	UNIT
Main Output V_1						
$V_{1\ nom}$	Nominal Output Voltage	0.5 · $I_{1\ nom}$, T_A = 25°C		12.0		VDC
$V_{1\ set}$	Output Setpoint Accuracy		-0.5		+0.5	%$V_{1\ nom}$
$dV_{1\ tot}$	Total Static Regulation	$V_{i\ min}$ to $V_{i\ max}$, 0 to 100% $I_{1\ nom}$, T_A = 0 to 40°C	-5		+5	%$V_{1\ nom}$
$P_{1\ nom}$	Nominal Output Power [1]	$V_{i\ min}$ to $V_{i\ max}$, T_A = 0 to 50°C (PTU2000-12-074ND)		2000		W
$I_{1\ nom}$	Output Current	$V_{i\ min}$ to $V_{i\ max}$,, T_A = 0 to 50°C (PTU2000-12-074ND)	0.0		167	ADC
$I_{1\ peak}$	Peak Output Current	$V_{i\ min}$ to $V_{i\ max}$,	0.0	175.3	180	ADC
$V_{1\ pp}$	Output Ripple Voltage [2]	$V_{i\ min}$ to $V_{i\ max}$, 0 to 100% $I_{1\ nom}$, C_{ext} ≥ 1 mF/Low ESR			120	mVpp
$dV_{1\ load}$	Load Regulation	$V_{i\ nom}$, 0 to 100% $I_{1\ nom}$		-250		mV
$dV_{1\ line}$	Line Regulation	$V_{i\ min}$ to $V_{i\ max}$, 0.5 · $I_{1\ nom}$	-20	0	20	mV
$dV_{1\ temp}$	Thermal Drift	$V_{i\ nom\ HL}$, 0.5 · $I_{1\ nom}$			-0.5	mV/°C
$dI_{1\ share}$	Current Sharing	Deviation from $I_{1\ tot}$ / N, I_1 > 10%	-4		+4	ADC
V_{ISHARE}	Current Share Bus Voltage	$I_{1\ peak}$ at 180 A		9.4		VDC
$dV_{1\ lt}$	Load Transient Response	ΔI_1 = 40% $I_{1\ nom}$, I_1 = 10 … 100% $I_{1\ nom}$, C_{ext} = 0 mF, dI_1/dt = 1A/µs, recovery within 1% of $V_{1\ nom}$			0.6	VDC
t_{rec}	Recovery Time			0.5	1	ms
$V_{1\ dyn}$	Dynamic Load Regulation	ΔI_1 = 50% $I_{1\ nom}$, starting anywere from 10% to 60%, f = 50 ... 5000 Hz, Duty cycle = 10 ... 90%, C_{ext} = 2 ...30mF, di/dt =1A/µs, 25°C	11.4		12.6	V
$t_{V1\ on\ delay}$	Delay time from DC applied	V1 in regulation Vi = 0V to $V_{i\ min}$, $V_{i\ nom}$, $V_{i\ max}$			3	sec
$t_{V1\ rise}$	Output Voltage Rise Time	V_1 = 10…90% $V_{1\ nom}$, C_{ext} < 10 mF		10	200	ms
$t_{V1\ ovr\ sh}$	Output Turn-on Overshoot	$V_{i\ nom}$, 0 to 100% $I_{1\ nom}$			13.2	V
$dV_{1\ sense}$	Remote Sense	Compensation for cable drop, 0 to 100% $I_{1\ nom}$			0.25	V
$C_{V1\ load}$	Capacitive Loading		0		20	mF
OVP	Over voltage Trip	$V_{i\ min}$ to $V_{i\ max}$,	13.6		15.0	V
Standby Output V_{SB}						
$V_{SB\ nom}$	Nominal Output Voltage	I_{SB} =1.25A (50% of I_{SBnom}, 25°C, (PTU2000-12-074ND))		12.0		VDC
$V_{SB\ set}$	Output Setpoint Accuracy		-1		+1	%V_{SBnom}
$dV_{SB\ tot}$	Total Regulation	$V_{i\ min}$ to $V_{i\ max}$, 0 to 100% $I_{SB\ nom}$	-5		+5	%V_{SBnom}
$P_{SB\ nom}$	Nominal Output Power	$V_{i\ min}$ to $V_{i\ max}$, T_A = 0 to 65°C (PTU2000-12-074ND)		36		W
$P_{SB\ peak}$	Peak Output Power	$V_{i\ min}$ to $V_{i\ max}$ (PTU2000-12-074ND)		40		W W
$I_{SB\ nom}$	Output Current	$V_{i\ min}$ to $V_{i\ max}$, T_A = 0 to 65°C (PTU2000-12-074ND)	0		3.0	ADC
$I_{SB\ peak}$	Peak Output Current	$V_{i\ min}$ to $V_{i\ max}$ (PTU2000-12-074ND)	3.4	3.8	5	ADC
$V_{SB\ pp}$	Output Ripple Voltage [2]	$V_{i\ min}$ to $V_{i\ max}$, 0 to 100% $I_{SB\ nom}$, C_{ext} = 0 mF			150	mVpp
		$V_{i\ min}$ to $V_{i\ max}$, 0 to 100% $I_{SB\ nom}$, C_{ext} ≥ 2 mF/Low ESR			120	mVpp
$dV_{SB\ load}$	Load Regulation	$V_{i\ nom\ HL}$, 0 to 100% $I_{SB\ nom}$		-300		mV
$dV_{SB\ line}$	Line Regulation	$V_{i\ min}$ to $V_{i\ max}$, $I_{SB\ nom}$ = 0 A	-20	4	20	mV

[1] See also chapter TEMPERATURE AND FAN CONTROL
[2] Measured with a 10 µF low ESR capacitor in parallel with a 0.1 µF ceramic capacitor at the point of measurement

$dV_{SB\ temp}$	Thermal Drift	$V_{i\ nom\ HL}$, $I_{SB\ nom}$ = 0 A			-0.5	mV/°C
$dI_{SB\ share}$	Current Sharing	Deviation from $I_{SB\ tot}$ / N, I_{SB} = 0.5 · $I_{SB\ nom}$	-1		+1	ADC
$dV_{SB\ lt}$	Load Transient Response	ΔI_{SB} = 50% $I_{SB\ nom}$, I_{SB} = 0 … 100% $I_{SB\ nom}$,		0.2	0.3	VDC
t_{rec}	Recovery Time	dI_{SB}/dt = 1A/µs, recovery within 1% of $V_{SB\ nom}$		1	2	ms
$V_{SB\ dyn}$	Dynamic Load Regulation	ΔI_{SB} = 1 A, I_{SB} = 0 … $I_{SB\ nom}$, f = 50 ... 5000 Hz, Duty cycle = 10 ... 90%, C_{ext} = 0 ... 5 mF	10.8		13.2	V
$t_{VSB\ rise}$	Output Voltage Rise Time	V_{SB} = 10…90% $V_{SB\ nom}$, C_{ext} < 1 mF	5	10	20	ms
$t_{VSB\ ovr\ sh}$	Output Turn-on Overshoot	$V_{i\ nom}$, 0 to 100% $I_{SB\ nom}$			13.2	V
$C_{VSB\ load}$	Capacitive Loading		0		3000	µF

6. EFFICIENCY

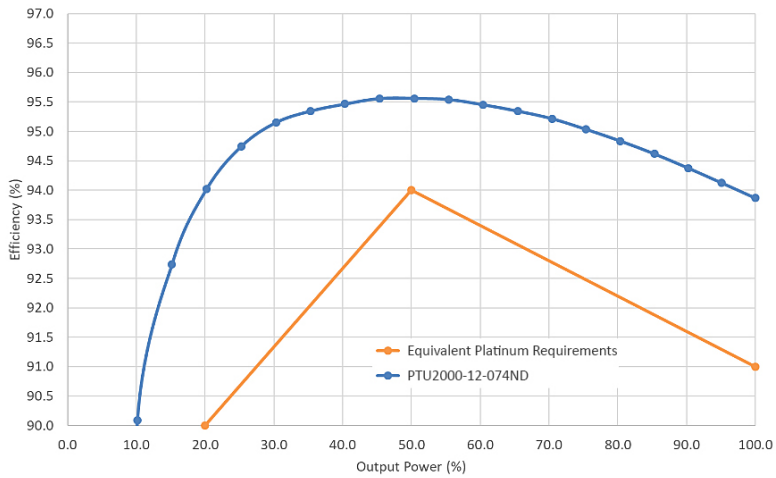

Figure 2. Efficiency vs. Output Power

7. OUTPUT GROUND / CHASSIS CONNECTION

The output return path serves as power and signal ground. All output voltages and signals are referenced to these pins. To prevent a shift in signal and voltage levels due to ground wiring voltage drop a low impedance ground plane should be used as shown in *Figure 3*. Alternatively, separated ground signals can be used as shown in *Figure 4*. In this case the two ground planes should be connected together at the power supplies ground pins.

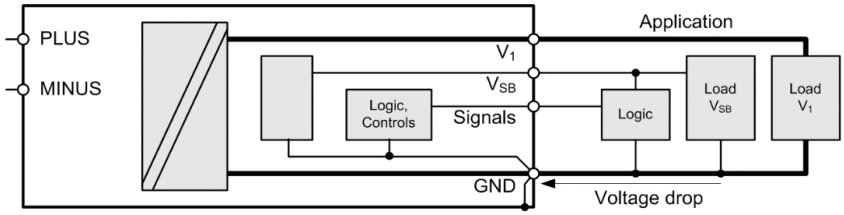

Figure 3. Common low impedance ground plane

© 2019 Bel Power Solutions & Protection

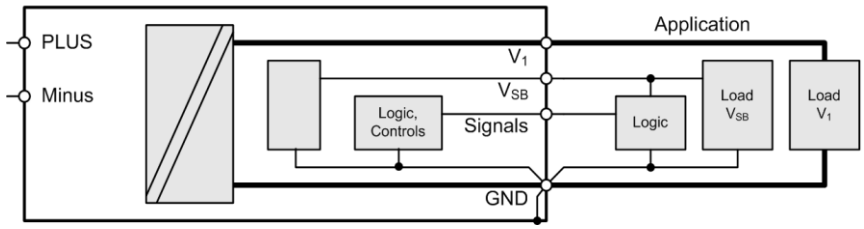

Figure 4. Separated power and signal ground

Due the unit has no Input Earth Connector Terminal on the front of the unit it is mandatory to have a reliable system output GND to Earth connection.

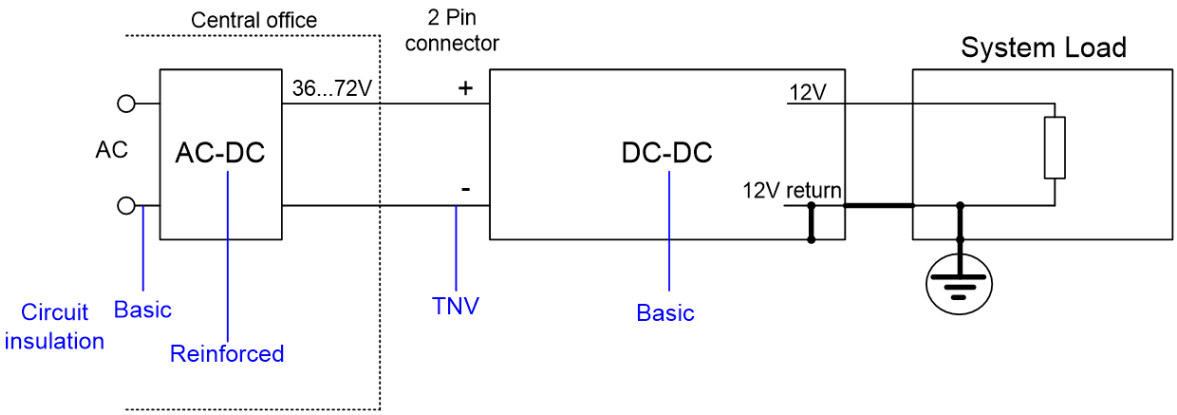

Figure 5. Block diagram with reliable System Earth connection

8. PROTECTION

General Condition: T_A = 0…50 °C (PTU2000-12-074ND), unless otherwise noted.

PARAMETER		DESCRIPTION / CONDITION	MIN	NOM	MAX	UNIT
F	Input Fuse (L)	Not use accessible, fast acting		80		A
$V_{1\,OV}$	OV Threshold V_1	Over Voltage V_1 Protection, Latch-off Type	13.6	14.3	14.5	VDC
$t_{V1\,OV}$	OV Trip Time V_1				1	ms
$V_{VSB\,OV}$	OV Threshold V_{SB}	Over Voltage V_1 Protection, Automatic retry each 1s	13.6	14.3	14.5	VDC
$t_{VSB\,OV}$	OV Trip Time V_{SB}				1	ms
$I_{V1\,OC\,Slow}$	OC Limit V_1	Over Current Limitation, Latch-off, $V_{i\,min}$ to $V_{i\,max}$	169		175	ADC
		Over Current Limitation, Latch-off time		20		s
$I_{V1\,OC\,Fast}$	Fast OC Limit V_1	Fast Over Current Limit. Latch-off, $V_{i\,min}$ to $V_{i\,max}$	176			ADC
$t_{V1\,OC\,Fast}$	Fast OC Trip time V_1	Fast Over Current Limitation, Latch-off time	50		60	ms
$I_{V1\,SC}$	Max Short Circuit Current V_1	V_1 < 3 V, time until I_{V1} is limited to < $I_{V1\,SC}$			180	A
$t_{V1\,SC}$	Short Circuit Regulation Time	Over Current Limitation, Constant-Current Type			2	ms
$I_{VSB\,OC}$	OC Limit V_{SB}	Over Current Limit., time until I_{VSB} is limited to $I_{VSB\,OC}$			6	A
$t_{VSB\,OC}$	OC Trip time V_{SB}	Automatic shut-down			1	ms
T_{SD}	Over Temperature on Heat Sinks			115		°C
OVP	Over voltage trip	$V_{i\,min}$ to $V_{i\,max}$	13.6		15.0	V

8.1 OVERVOLTAGE PROTECTION

The PTU2000-12-074NDfront-end provides a fixed threshold overvoltage (OV) protection implemented with a HW comparator for both the main and the standby output. Once an OV condition has been triggered on the main output, the supply will shut down and latch the fault condition. The latch can be unlocked by disconnecting the supply from the DC supply or by toggling the PSON_L input. The standby output will continuously try to restart with a 1 s interval after OV condition has occurred.

8.2 UNDERVOLTAGE DETECTION

Both main and standby outputs are monitored. LED and PWOK_H pin signal if the output voltage exceeds about ±10% of its nominal voltage.
The main output will latch off if the main output voltage V_1 falls below 10 V (typically in an overload condition) for more than 55 ms. The latch can be unlocked by disconnecting the supply from the DC supply or by toggling the PSON_L input.
If the standby output leaves its regulation bandwidth for more than 2 ms then the main output is disabled to protect the system.

8.3 CURRENT LIMITATION

MAIN OUTPUT

The main output exhibits a substantially rectangular output characteristic controlled by a software feedback loop. If output current exceeds $I_{V1\ OC\ Fast}$ it will reduce output voltage in order to keep output current at $I_{V1\ OC\ Fast}$. If the output voltage drops below ~10.0 VDC for more than 55 ms, the output will latch off (standby remains on).
The latch can be unlocked by disconnecting the supply from the DC mains or by toggling the PSON_L input. The main output current limitation thresholds depend on the actual input applied to the power supply.

STANDBY OUTPUT

The standby output exhibits a substantially rectangular output characteristic down to 0 V (no hiccup mode / latch off). The current limitation of the standby output is independent of the DC input voltage.
Running in current limitation causes the output voltage to fall, this will trigger under voltage protection and disables the main output.

9. MONITORING

The power supply operating parameters can be accessed through I²C interface. For more details refer to chapter I2C / POWER MANAGEMENT BUS COMMUNICATION and document URP.00649 (PTU2000-12-074 Power Management Bus Communication Manual).

PARAMETER		DESCRIPTION / CONDITION	MIN	NOM	MAX	UNIT
$V_{i\ mon}$	Input Voltage	$V_{i\ min\ LL} \leq V_i \leq V_{i\ max}$	-2		+2	VDC
$I_{i\ mon}$	Input Current	$I_i > 5.8$ A	-10		+10	%
$P_{i\ mon}$	True Input Power	$P_i > 250$ W	-10		+10	%
$V_{1\ mon}$	V_1 Voltage		-0.2		+0.2	VDC
$I_{1\ mon}$	V_1 Current	$I_1 > 50$A	-2		+2	%
		5 A < $I_1 \leq 50$ A	-0.5		+0.5	ADC
$P_{1\ nom}$	V_1 Output Power	$P_i > 1000$ W	-1		+1	%
		50 W < $P_i \leq 1000$ W	-10		+10	W
$V_{SB\ mon}$	V_{SB} Voltage		-0.2		+0.2	VDC
$I_{SB\ mon}$	V_{SB} Current		-0.2		+0.2	ADC
$T_{A\ mon}$	Inlet Temperature	$T_{A\ min} \leq T_A \leq T_{A\ max}$	-5	2	+5	°C

© 2019 Bel Power Solutions & Protection

10. SIGNALING AND CONTROL

10.1 ELECTRICAL CHARACTERISTICS

PARAMETER		DESCRIPTION / CONDITION	MIN	NOM	MAX	UNIT
PSON_H / HOTSTANDBYEN_H						
V_{IL}	Input Low Level Voltage	PSON_L: Main output enabled HOTSTANDBYEN_H: Hot Standby mode not allowed	-0.2		0.8	V
V_{IH}	Input High Level Voltage	PSON_L: Main output disabled HOTSTANDBYEN_H: Hot Standby mode allowed	2		3.5	V
$I_{IL,H}$	Maximum Input Sink or Source Current	V_I = -0.2 V to +3.5 V	-1		1	mA
$R_{pull\ up}$	Internal Pull up Resistor to internal 3.3 V			10		kΩ
R_{LOW}	Maximum external Pull down Resistance to GND to obtain Low Level				1	kΩ
R_{HIGH}	Minimum external Pull down Resistance to GND to obtain High Level		50			kΩ
PWOK_H						
V_{OL}	Output Low Level Voltage	V_1 or V_{SB} out of regulation, V_{Isink} < 4 mA	0		0.4	V
V_{OH}	Output High Level Voltage	V_1 and V_{SB} in regulation, I_{source} < 0.5 mA	2.4		3.5	V
$R_{pull\ up}$	Internal Pull up Resistor to internal 3.3 V			1		kΩ
I_{OL}	Maximum Sink Current	V_O < 0.4 V			4	mA

10.2 SENSE INPUTS

The main output has sense lines implemented to compensate for voltage drop on load wires in both positive and negative path. The maximum allowed voltage drop is 200 mV on the positive rail and 100 mV on the GND rail.
With open sense inputs the main output voltage will rise by 270 mV. Therefore, if not used, these inputs should be connected to the power output and GND at the power supply connector. The sense inputs are protected against short circuit. In this case the power supply will shut down.

10.3 CURRENT SHARE

The PTU front-ends have an active current share scheme implemented for V1. All the ISHARE current share pins need to be interconnected in order to activate the sharing function. If a supply has an internal fault or is not turned on, it will disconnect its ISHARE pin from the share bus. This will prevent dragging the output down (or up) in such cases.
The current share function uses an analog bus to transmit and receive current share information. The controller implements a Master/Slave current share function. The power supply providing the largest current among the group is automatically the Master. The other supplies will operate as Slaves and increase their output current to a value close to the Master by slightly increasing their output voltage. The voltage increase is limited to +250 mV.
The standby output uses a passive current share method (droop output voltage characteristic).

10.4 PSON_L INPUT

The PSON_L is an internally pulled-up (3.3 V) input signal to enable/disable the main output V1 of the front-end. With low level input the main output is enabled. This active-low pin is also used to clear any latched fault condition. The PSON_L signal can be either controlled by an open collector device or by a voltage source.

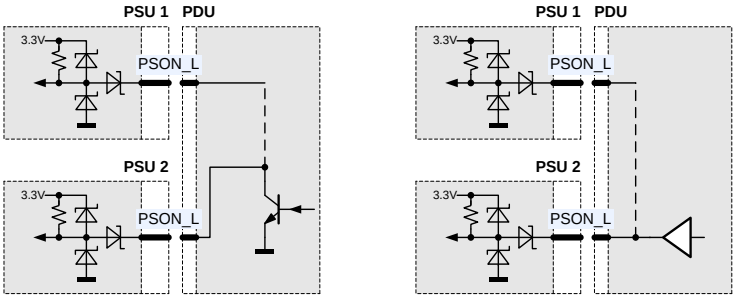

Figure 6. PSON_L connection

10.5 PWOK_H OUTPUT

The PWOK_H is an open drain output with an internal pull-up to 3.3 V indicating whether both VSB and V1 outputs are within regulation. This pin is active-low.

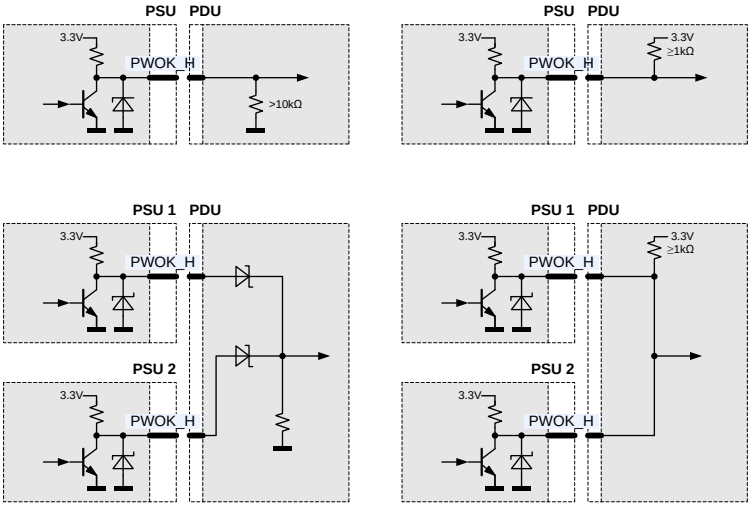

Figure 7. PWOK_H connection

10.6 PRESENT_L OUTPUT

The PRESENT_L pin is wired through a 100 Ohms resistor to internal GND within the power supply. This pin does indicate that there is a power supply present in this system slot. An external pull-up resistor has to be added within the application. Current into PRESENT_L should not exceed 5mA to guarantee a low level voltage if power supply is seated.

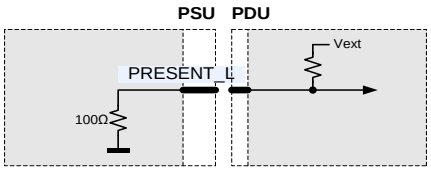

Figure 8. PRESENT_L connection

© 2019 Bel Power Solutions & Protection

10.7 SIGNAL TIMING

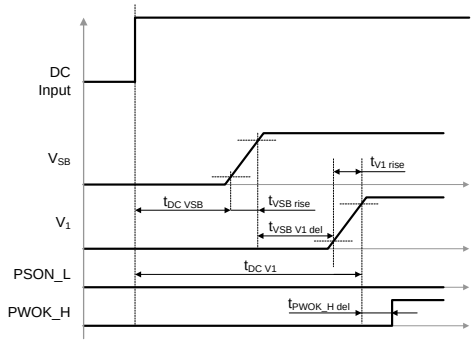

Figure 9. DC turn-on timing

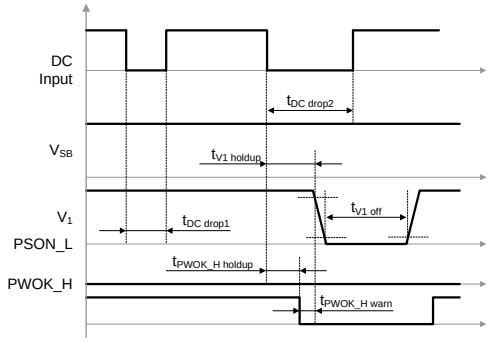

Figure 10. DC short dips

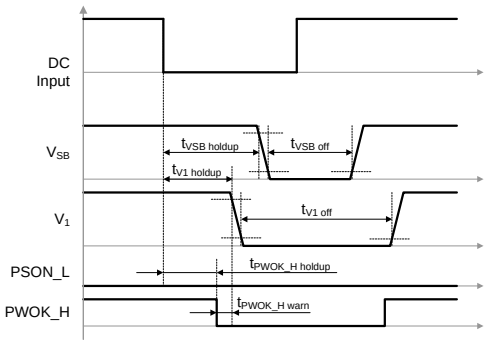

Figure 11. DC long dips

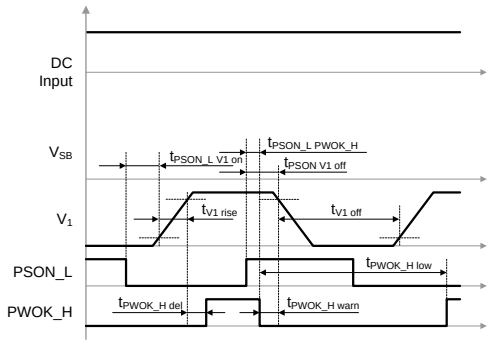

Figure 12. PSON_L turn-on/off timing

PARAMETER		DESCRIPTION / CONDITION	MIN	NOM	MAX	UNIT
$T_{DC\ VSB}$	DC Line to 90% V_{SB}				3	s
$t_{AC\ V1}$	DC Line to 90% V_1	PSON_L = Low			5 [3]	s
$t_{VSB\ V1\ del}$	V_{SB} to V_1 delay	PSON_L = Low	50		1000	ms
$t_{V1\ rise}$	V_1 rise time	See chapter OUTPUT				
$t_{VSB\ rise}$	V_{SB} rise time	See chapter OUTPUT				
$T_{DC\ drop1}$	DC drop from Vi = 48 VDC, without V_1 leaving regulation	$I_{1\ nom}$, $I_{SB\ nom}$	5	5.5		ms
$T_{DC\ drop2}$	DC drop without V_{SB} leaving regulation	$I_{1\ nom}$, $I_{SB\ nom}$	10			ms
$t_{V1\ holdup}$	Loss of DC to V_1 leaving regulation	See chapter INPUT	5	6		ms
$t_{VSB\ holdup}$	Loss of DC to V_1 leaving regulation	See chapter INPUT	10			ms
$t_{PWOK\_H\ del}$	Outputs in regulation to PWOK_H asserted		5		400	ms
$t_{PWOK\_H\ warn}$	Warning time from de-assertion of PWOK_H to V_1 leaving regulation		0			ms
$t_{PWOK\_H\ holdup}$	Loss of DC to PWOK_H de-asserted		2			ms
$t_{PWOK\_H\ low}$	Time PWOK_H is kept low after being de-asserted		100			ms
$t_{PSON\_L\ V1\ on}$	Delay PSON_L active to V_1 in regulation		5		400	ms
$t_{PSON\_L\ V1\ off}$	Delay PSON_L de-asserted to V_1 disabled			TBD		ms
$t_{PSON\_L\ PWOK\_H}$	Delay PSON_L de-asserted to PWOK_H de-asserted				4	ms
$t_{V1\ off}$	Time V_1 is kept off after leaving regulation			1		s
$t_{VSB\ off}$	Time V_{SB} is kept off after leaving regulation			1		s

[3] At repeated ON-OFF cycles the start-up times can be increased by 1 s

10.8 LED INDICATOR

The front-end has one front LED showing the status of the supply. The LED is bi-colored: green and amber, and indicates DC input and DC output power presence and warning or fault conditions. *Table 1* below lists the different LED status.

OPERATING CONDITION [4]	LED SIGNALING
No Vi or DC Line in UV condition, V_{SB} not present from paralleled power supplies	Off
PSON_L High	Blinking Green 1 Hz
No DC or ADC Line in UV condition, V_{SB} present from paralleled power supplies V_1 or V_{SB} out of regulation Over temperature shutdown Output over voltage shutdown (V_1 or V_{SB}) Output over current shutdown (V_1 or V_{SB}) Fan error (>25%)	Solid Amber
Over temperature warning Minor fan regulation error (>20%, <20%)	Blinking Amber 1 Hz
Firmware boot loading in process	Blinking Green 2 Hz
Outputs V_1 and V_{SB} in regulation	Solid Green

Table 1. LED Status

[4] The order of the criteria in the table corresponds to the testing precedence in the controller

© 2019 Bel Power Solutions & Protection

11. I2C / POWER MANAGEMENT BUS COMMUNICATION

The PTU front-end is a communication Slave device only; it never initiates messages on the I²C/SMBus by itself. The communication bus voltage and timing is defined in *Table 2* and further characterized through:

- The SDA/SCL IOs use 3.3 V logic levels
- External pull-up resistors on SDA/SCL required for correct signal edges
- Full SMBus clock speed of 100 kbps
- Clock stretching limited to 1 ms
- SCL low time-out of >25 ms with recovery within 10 ms
- Recognizes any time Start/Stop bus conditions

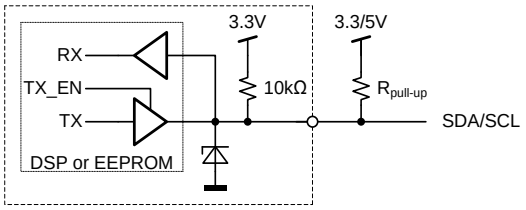

Figure 13. Physical Layer of Communication Interface

Communication to the DSP or the EEPROM will be possible as long as the input DC voltage is provided. If no DC is present, communication to the unit is possible as long as it is connected to a life VSB output (provided e.g. by the redundant unit). If only V1 is provided, communication is not possible.

PARAMETER	DESCRIPTION	CONDITION	MIN	MAX	UNIT
SCL / SDA					
V_{IL}	Input low voltage		-0.5	1.0	V
V_{IH}	Input high voltage		2.3	3.5	V
V_{hys}	Input hysteresis		0.15		V
V_{OL}	Output low voltage	3 mA sink current	0	0.4	V
t_r	Rise time for SDA and SCL		20+0.1C_b[1]	300	ns
t_{of}	Output fall time ViHmin → ViLmax	10 pF < C_b[1] < 400 pF	20+0.1C_b[1]	250	ns
I_i	Input current SCL/SDA	0.1 VDD < Vi < 0.9 VDD	-10	10	µA
C_i	Internal Capacitance for each SCL/SDA			50	pF
f_{SCL}	SCL clock frequency		0	100	kHz
$R_{pull-up}$	External pull-up resistor	f_{SCL} ≤ 100 kHz		1000 ns / C_b[1]	Ω
t_{HDSTA}	Hold time (repeated) START	f_{SCL} ≤ 100 kHz	4.0		µs
t_{LOW}	Low period of the SCL clock	f_{SCL} ≤ 100 kHz	4.7		µs
t_{HIGH}	High period of the SCL clock	f_{SCL} ≤ 100 kHz	4.0		µs
t_{SUSTA}	Setup time for a repeated START	f_{SCL} ≤ 100 kHz	4.7		µs
t_{HDDAT}	Data hold time	f_{SCL} ≤ 100 kHz	0	3.45	µs
t_{SUDAT}	Data setup time	f_{SCL} ≤ 100 kHz	250		ns
t_{SUSTO}	Setup time for STOP condition	f_{SCL} ≤ 100 kHz	4.0		µs
t_{BUF}	Bus free time between STOP and START	f_{SCL} ≤ 100 kHz	5		ms

[1] Cb = Capacitance of bus line in pF, typically in the range of 10…400 pF

Table 2. I²C / SMBus Specification

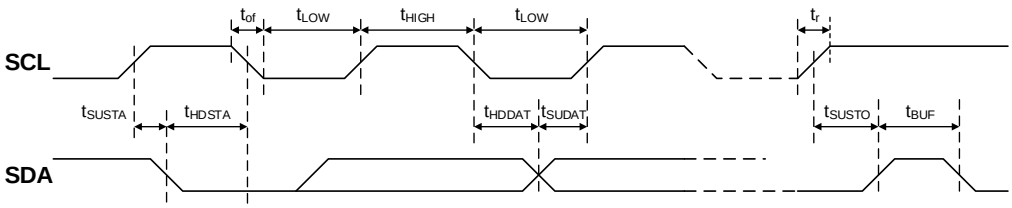

Figure 14. I²C / SMBus Timing

ADDRESS SELECTION

The address for I²C communication can be configured by pulling address input pins A2, A1 and A0 either to GND (Logic Low) or leave them open (Logic High). An internal pull up resistor will cause the A1 / A0 pin to be in High Level if left open. A fixed addressing offset exists between the Controller and the EEPROM.

A2	A1	A0	I2C Address [1]	
			Controller	EEPROM
0	0	0	0xB0	0xA0
0	0	1	0xB2	0xA2
0	1	0	0xB4	0xA4
0	1	1	0xB6	0xA6
1	0	0	0xB8	0xA8
1	0	1	0xBA	0xAA
1	1	0	0xBC	0xAC
1	1	1	0xBE	0xAE

[1] The LSB of the address byte is the R/W bit.

Table 3. Address and Protocol Encoding

11.1 SMBALERT_L OUTPUT

The SMBALERT_L signal indicates that the power supply is experiencing a problem that the system agent should investigate. This is a logical OR of the Shutdown and Warning events. It is asserted (pulled Low) at Shutdown or Warning events such as reaching temperature warning/shutdown threshold of critical component, general failure, over-current, over-voltage, under-voltage or low-speed of failed fan. This signal may also indicate the power supply is operating in an environment exceeding the specified limits.

The SMBAlert signal is asserted simultaneously with the LED turning to solid amber or blinking amber.

PARAMETER		DESCRIPTION / CONDITION	MIN	NOM	MAX	UNIT
SMB_ALERT_L						
V_{ext}	Maximum External Pull up Voltage				12	V
I_{OH}	Maximum High Level Leakage Current	No Failure or Warning condition, V_O = 12 V			10	µA
V_{OL}	Output Low Level Voltage	Failure or Warning condition, I_{sink} < 4 mA	0		0.4	V
$R_{pull\ up}$	Internal Pull up Resistor to internal 3.3 V			None		
I_{OL}	Maximum Sink Current	V_O < 0.4 V			4	mA

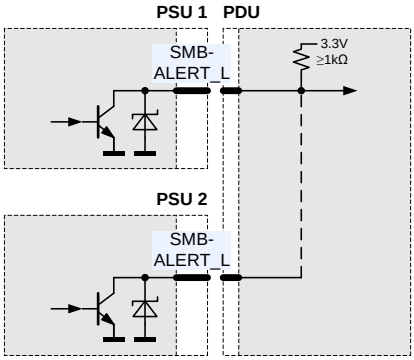

Figure 15. SMBALERT_L connection

© 2019 Bel Power Solutions & Protection

11.2 CONTROLLER AND EEPROM ACCESS

The controller and the EEPROM in the power supply share the same I²C bus physical layer (see *Figure 16*) and can be accessed under different addresses, see ADDRESS SELECTION. The SDA/SCL lines are connected directly to the controller and EEPROM which are supplied by internal 3.3 V.

The EEPROM provides 256 bytes of user memory. None of the bytes are used for the operation of the power supply.

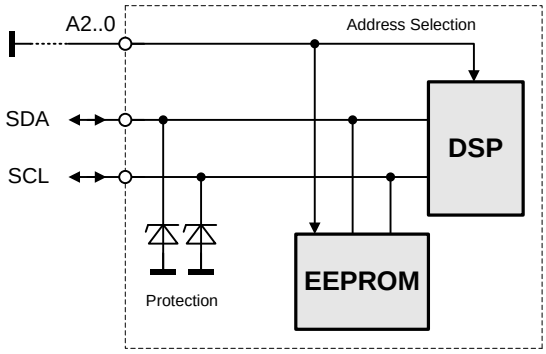

Figure 16. I²C Bus to DSP and EEPROM

11.3 EEPROM PROTOCOL

The EEPROM follows the industry communication protocols used for this type of device. Even though page write / read commands are defined, it is recommended to use the single byte write / read commands.

WRITE

The write command follows the "SMBus 1.1 Write Byte Protocol". After the device address with the write bit cleared, the Two Byte Data Address is sent followed by the data byte and the STOP condition. A new START condition on the bus should only occur after 5ms of the last STOP condition to allow the EEPROM to write the data into its memory.

READ

The read command follows the "SMBus 1.1 Read Byte Protocol". After the device address with the write bit cleared the two byte data address is sent followed by a repeated start, the device address and the read bit set. The EEPROM will respond with the data byte at the specified location.

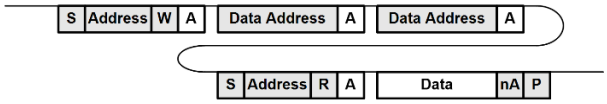

11.4 POWER MANAGEMENT BUS PROTOCOL

The Power Management Bus is an open standard protocol that defines means of communicating with power conversion and other devices. For more information, please see the System Management Interface Forum web site at: www.powerSIG.org.

Power Management Bus command codes are not register addresses. They describe a specific command to be executed. The PTU2000-12-074ND supply supports the following basic command structures:

- Clock stretching limited to 1 ms
- SCL low time-out of >25 ms with recovery within 10 ms
- Recognized any time Start/Stop bus conditions

WRITE

The write protocol is the SMBus 1.1 Write Byte/Word protocol. Note that the write protocol may end after the command byte or after the first data byte (Byte command) or then after sending 2 data bytes (Word command).

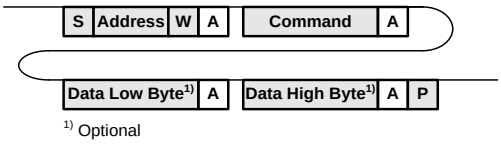

In addition, Block write commands are supported with a total maximum length of 255 bytes. See PTU2000-12-074NA / PTU2000-12-074ND Power Management Bus Communication Manual URP.00649 for further information.

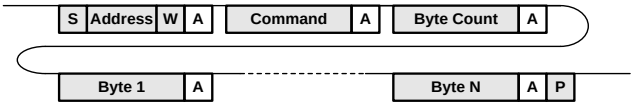

READ

The read protocol is the SMBus 1.1 Read Byte/Word protocol. Note that the read protocol may request a single byte or word.

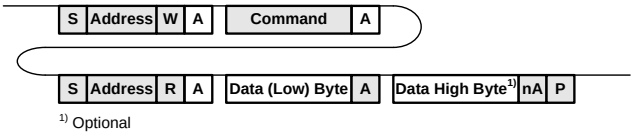

In addition, Block read commands are supported with a total maximum length of 255 bytes.
See PTU2000-12-074NA/ PTU2000-12-074ND Power Management Bus Communication Manual URP.00649 for further information.

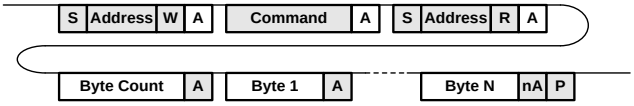

© 2019 Bel Power Solutions & Protection

11.5 GRAPHICAL USER INTERFACE

The Bel Power Solutions provides with its "I²C Utility" a Windows® XP/Vista/Win7 compatible graphical user interface allowing the programming and monitoring of the PTU2000-12-074NDFront-End. The utility can be downloaded on: www.belpowersolution.com and supports both the PSMI and Power Management Bus protocols.
The GUI allows automatic discovery of the units connected to the communication bus and will show them in the navigation tree. In the monitoring view the power supply can be controlled and monitored.
If the GUI is used in conjunction with the YTM.00046 Evaluation Board it is also possible to control the PSON_L pin(s) of the power supply.
Further there is a button to disable the internal fan for approximately 10 seconds. This allows the user to take input power measurements without fan consumptions to check efficiency compliance to the Climate Saver Computing Platinum specification.
The monitoring screen also allows to enable the hot-standby mode on the power supply. The mode status is monitored and by changing the load current it can be monitored when the power supply is being disabled for further energy savings.
This obviously requires 2 power supplies being operated as a redundant system (as in the evaluation kit).

NOTE: The user of the GUI needs to ensure that only one of the power supplies have the hot-standby mode enabled.

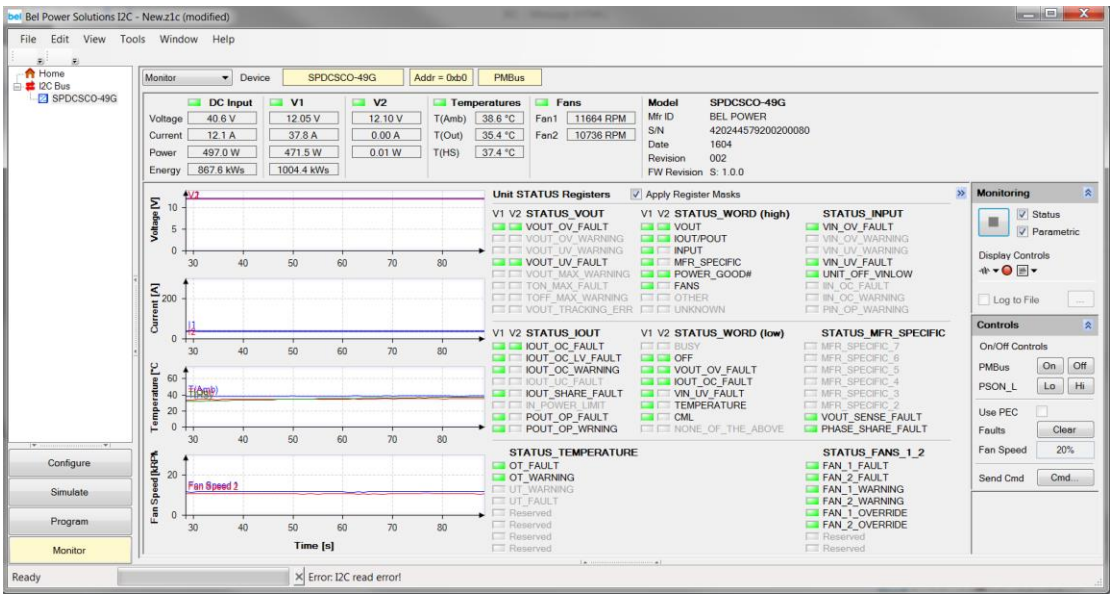

Figure 17. Monitoring dialog of the I²C Utility

12. TEMPERATURE AND FAN CONTROL

To achieve best cooling results sufficient airflow through the supply must be ensured. Do not block or obstruct the airflow at the rear of the supply by placing large objects directly at the output connector. The PTU2000-12-074ND is provided with a rear to front airflow, which means the air enters through the DC-output of the supply and leaves at the DC-inlet. The PTU2000-12-074ND is provided with a rear to front airflow, which means the air enters through DC-output of the supply and leaves at the the DC-input.

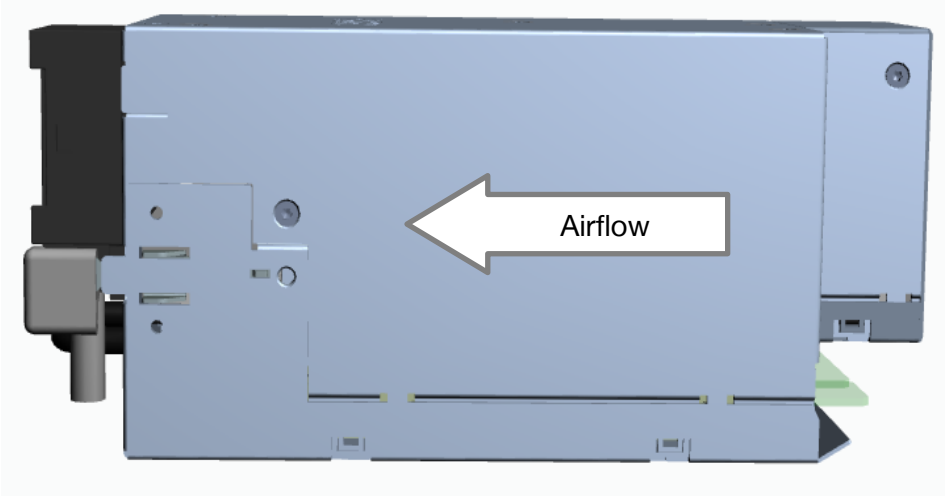

Figure 18. Airflow direction PTU2000-12-074ND

The fan inside of the supply is controlled by a microprocessor. The rpm of the fan is adjusted to ensure optimal supply cooling and is a function of output power and the inlet temperature.

The PTU2000-12-074ND provides access via I^2C to the measured temperatures of sensors within the power supply, see *Table 4*. The microprocessor is monitoring these temperatures and if warning threshold of one of these sensors is reached it will set fan to maximum speed. If temperatures continue to rise above shut down threshold the main output V_1 (or V_{SB} if auxiliary converter is affected) will be disabled. At the same time, the warning or fault condition is signalized accordingly through LED, PWOK_H and SMBALERT_L.

TEMPERATURE SENSOR	DESCRIPTION / CONDITION	POWER MANAGEMENT BUS REGISTER	WARNING THRESHOLD	SHUT DOWN THRESHOLD
Inlet Air Temperature	PTU2000-12-074ND	Ox8D	100°C	80°C
Synchronous Rectifier	Sensor located on secondary side of DC/DC stage	0xD6	100°C	110°C
Primary Heat Sink	Sensor located next to the heat sink	0x8E	100°C	110°C

Table 4. Temperature sensor location and thresholds

© 2019 Bel Power Solutions & Protection

12.1 MAXIMUM OUTPUT POWER VERSUS INLET TEMPERATURE FOR SAFETY COMPLIANCY

For safety compliant operation the power supply needs to be operating inside the specified operating conditions.
The PTU2000-12-074ND modules have different power derating behavior which are mainly dependent on the air flow direction and the ambient conditions.

PTU2000-12-074ND

Between 0°C and 50°C power supply is only depending on AC input altitude. Above 50°C the maximum output power is further reduced with rising temperature. *Figure 19* illustrates these maximum current and power levels.

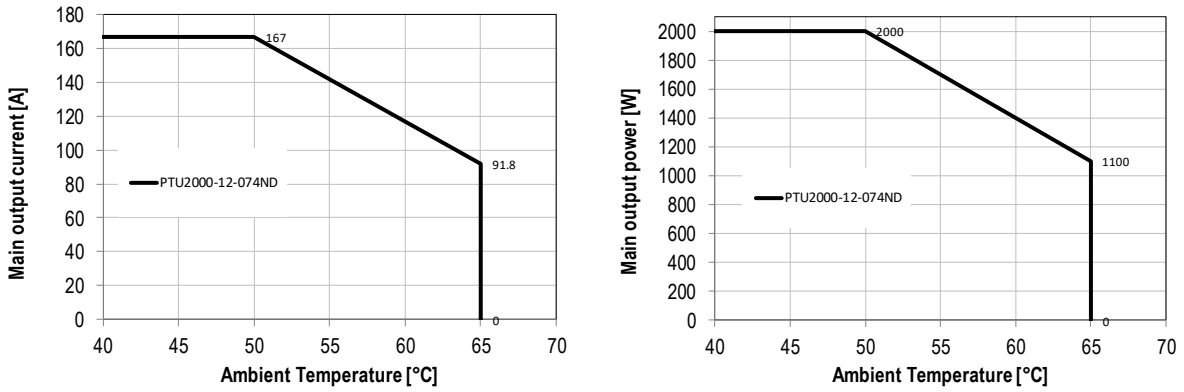

Figure 19. Maximum current and power levels PTU2000-12-074ND

13. ELECTROMAGNETIC COMPATIBILITY

13.1 IMMUNITY

PARAMETER	DESCRIPTION / CONDITION	CRITERION
ESD Contact Discharge	IEC / EN 61000-4-2, ±8 kV, 25+25 discharges per test point (metallic case, LED, connector body)	A
ESD Air Discharge	IEC / EN 61000-4-2, ±15 kV, 25+25 discharges per test point (non-metallic user accessible surfaces)	A
Radiated Electromagnetics Filed	IEC / EN 61000-4-3, 10 V/m, 1 kHz/80% Amplitude Modulation, 1µs Pulse Modulation, 10 kHz ... 2 GHz	A
Burst	IEC / EN 61000-4-4, Level 3 DC input port ±2 kV, 1 minute	A
Surge	IEC / EN 61000-4-5 ; NEBS GR-1089-CORE Issue 6 Common mode: ±1 kV (2 Ohm) Differential mode : ±1 kV (2 Ohm)	A
RF Conducted Immunity	IEC / EN 61000-4-6, Level 3, 10 Vrms, CW, 0.1 … 80 MHz	A

13.2 EMISSION

PARAMETER	DESCRIPTION / CONDITION	CRITERION
Conducted Emission	EN 55022 / EN 55032 / CISPR 22: 0.15 … 30 MHz, QP and AVG, single power supply	Class A
Radiated Emission	EN 55022 / EN55032 CISPR 22: 30 MHz … 1 GHz, QP, single power supply	Class A
Acoustical Noise	Distance at bystander position, 25°C, 50% Load	65 dBA

14. SAFETY / APPROVALS

Maximum electric strength testing is performed in the factory according to IEC/EN 60950, and UL 60950. Input-to-output electric strength tests should not be repeated in the field. Bel Power Solutions will not honor any warranty claims resulting from electric strength field tests.

PARAMETER	DESCRIPTION / CONDITION	NOTE
Agency Approvals	UL 60950-1 2nd Edition CAN/CSA-C22.2 No. 60950-1-07 2nd Edition IEC 60950-1: 2005 IEC 62368-1: 2014 EN 60950-1: 2006 EN 62368-1: 2014 NEMKO EAC CQC	In process
Isolation Strength	Input plus to chassis; 1500 V for 1 minute	Basic
	Input minus to chassis; 1500 V for 1 minute	Basic
	Output to chassis	None (Direct connection)
Creepage / Clearance	Primary to chassis (PE) Primary to secondary	>2 mm

15. ENVIRONMENTAL

PARAMETER		DESCRIPTION / CONDITION	MIN	NOM	MAX	UNIT
TA	Ambient Temperature	Up to 13.000ft ASL, PTU2000-12-074ND, 55% load, long term, 1.7” H2O (425Pa)	-5		+50	°C
TAext	Extended Temp. Range	PTU2000-12-074ND, 55% load, 6000ft, short term 96h NEBS condition, 2.4” H20 (596 Pa)			65	°C
		PTU2000-12-074ND, 100% load, 13000ft, short term 96h NEBS condition, 1.7” H20 (425 Pa)			55	°C
TS	Storage Temperature	Non-operational	-20		+70	°C
	Altitude	Operational, above Sea Level	-		3’962	m
		Non-operational, above Sea Level	-		10’600	m
	Shock, operational	Half sine, 11ms, 10 shocks per direction, 6 directions			1	g peak
	Shock, non-operational				30	g peak
	Vibration, sinusoidal, operational	IEC/EN 60068-2-6, sweep 5 to 500 to 5 Hz, 1 octave/min, 5 sweeps per axis			1	g peak
	Vibration, sinusoidal, non-operational				4	g peak
	Vibration, random, operational	7.7grms 30min, 3 axes operational			7.7	Grms
	Vibration, random, non-operational	IEC/EN 60068-2-64, 5 to 500 Hz, 1 hour per axis			0.025	g^2/Hz

16. RELIABILITY

PARAMETER		DESCRIPTION / CONDITION	MIN	NOM	MAX	UNIT
MTBF	Mean time to failure	According Bellcore TR-TSY-000332, Issue 3 T_A = 25°C, V_i = 48 VDC, 0.5 · $I_{1\ nom}$, $I_{SB\ nom}$	650			kh
	Expected life time	T_A = 25°C, V_i = 48 VDC, 0.7 · $I_{1\ nom}$, $I_{SB\ nom}$	7			years
		T_A = 55°C, V_i = 48 VDC, $I_{1\ nom}$, $I_{SB\ nom}$	2			

© 2019 Bel Power Solutions & Protection

17. MECHANICAL

PARAMETER		DESCRIPTION / CONDITION	MIN	NOM	MAX	UNIT
	Dimensions *	Width		73.5		mm
		Heigth		80.0		mm
		Depth		140		mm
m	Weight			1.3		kg

* Dimensions in mm, tolerances acc. ISO 2768 ()-H, unless otherwise stated: 0.5-30: ±0.2; 30-120: ±0.3; 120-400: ±0.5

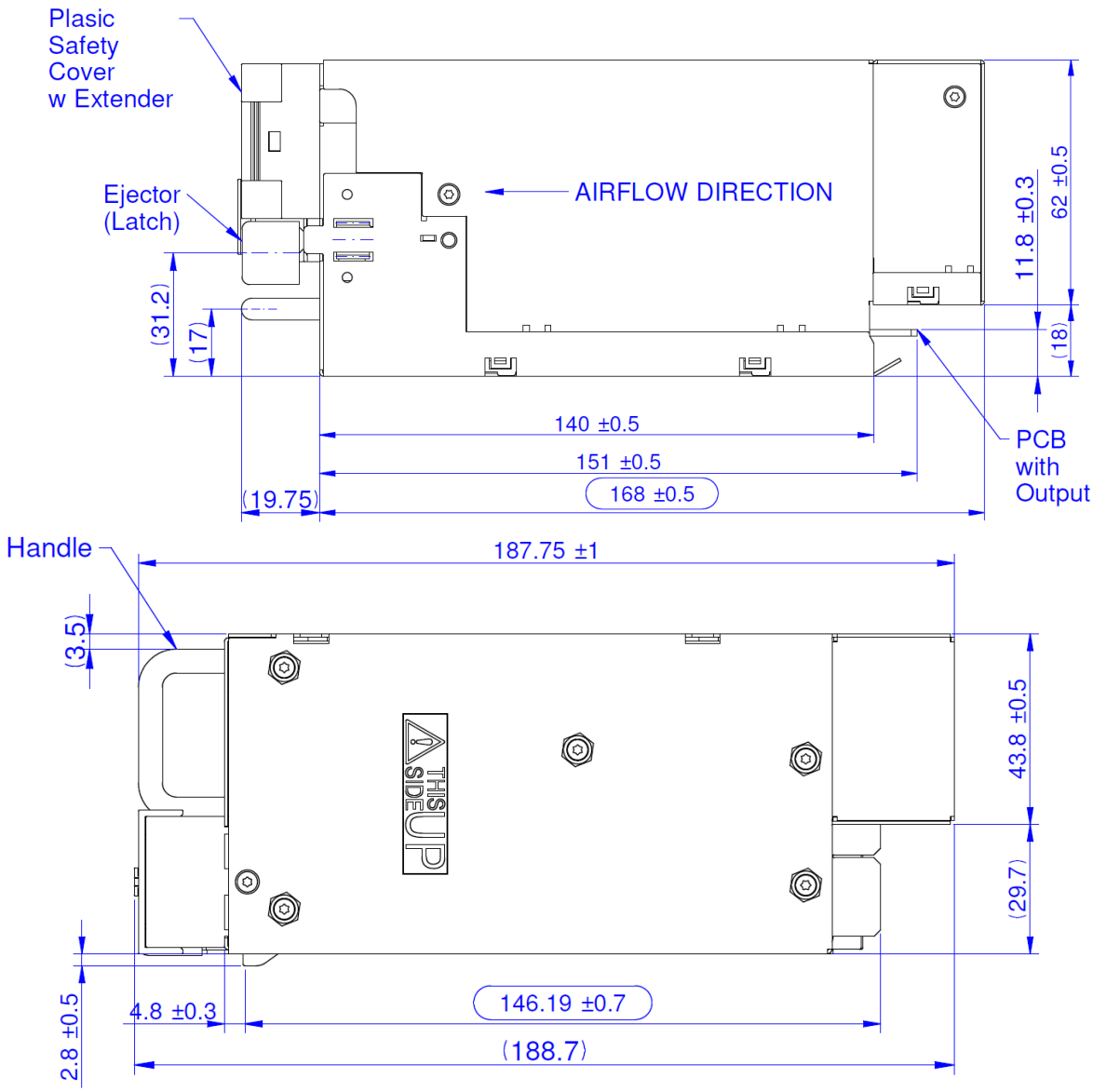

Figure 20. Top and side view with the connector added

Figure 21. Front view

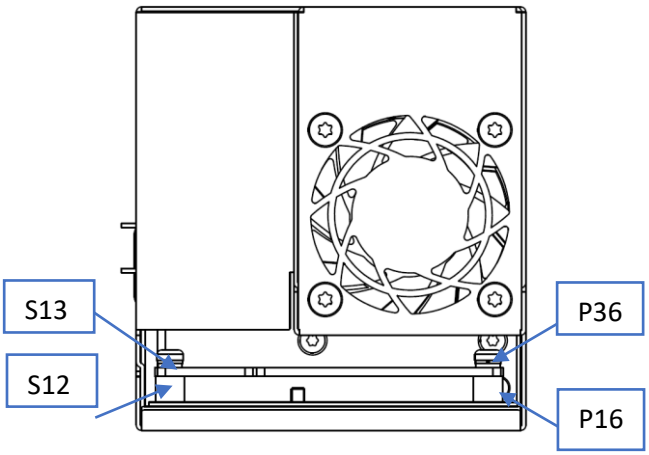

Figure 22. Rear view

Figure 23. Card Edge PCB

© 2019 Bel Power Solutions & Protection

18. CONNECTORS

PARAMETER	DESCRIPTION / CONDITION	MIN	NOM	MAX	UNIT
DC inlet	Cable lug LCC6-10A-L , Panduit straight, long barrel Cable lug YA6CL2TC10, Burndy straight, Cable lug YA6CL2TC1090, Burndy 90°				
DC diameter requirement	Wire size	6		4	AWG
Output connector	25-Pin PCB card edge				
Mating output connector	Manufacturer: FCI Electronics Manufacturer P/N: 10130248-005LF, (see *Figure 24* for option x) BEL P/N: ZES.00678				

PIN	SIGNAL NAME	DESCRIPTION
P1 ~ P10 P29 ~ P36	GND GND	Power and signal ground (return)
P11 ~ P18 P19 ~ P28	V1 V1	+12 VDC main output
S1 S2	A0 A1	I^2C address selection input
S3, S4, S21, S22	VSB	+12 V Standby positive output
S5	NC	NC
S6	ISHARE	Analog current share bus
S7	Reserved	For future use, keep open circuit
S8	PRESENT_L	Power supply seated, active-low
S9	A2	I2C address selection input (on standard models)
S10 ~ S15	GND	Power and signal ground (return)
S16	PWOK_H	Power OK signal output, active-high
S17	V1_SENSE	Main output positive sense
S18	V1_SENSE_R	Main output negative sense
S19	SMB_ALERT_L	SMB Alert signal output, active-low
S20	PSON_L	Power supply on input, active-low
S23	SCL	I^2C clock signal line
S24	SDA	I^2C data signal line

Table 5. Output connector pin assignment

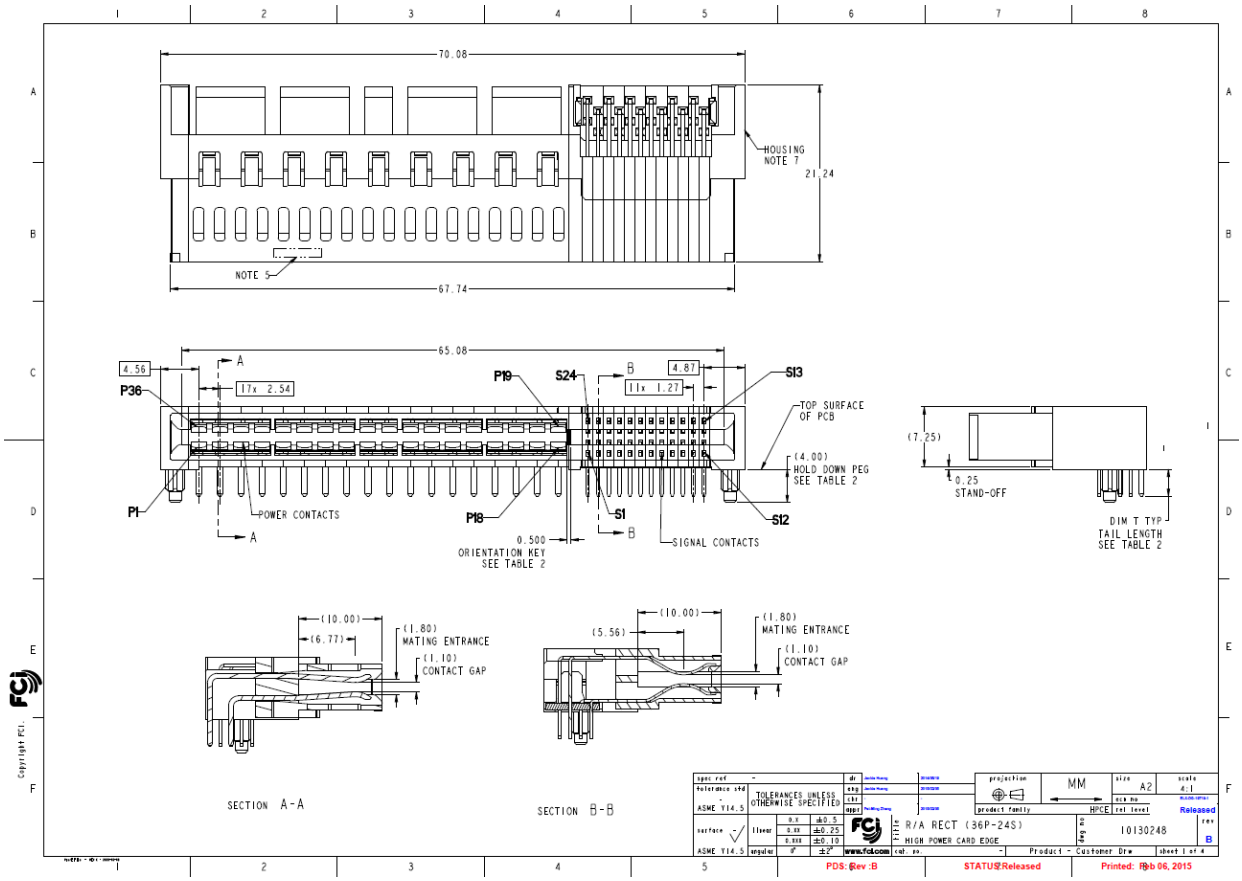

Figure 24. Mating connector drawing page 1

© 2019 Bel Power Solutions & Protection

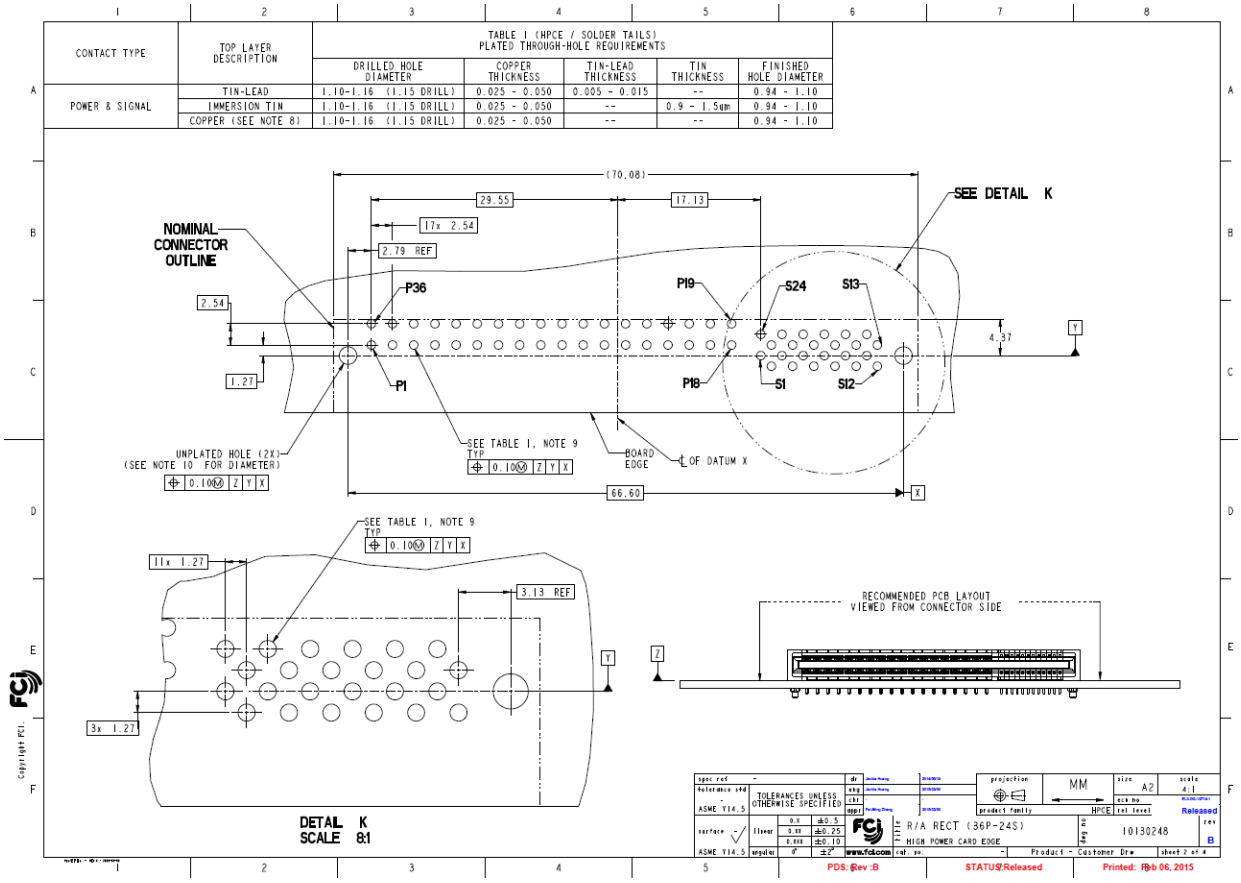

Figure 25. Mating connector drawing page 2

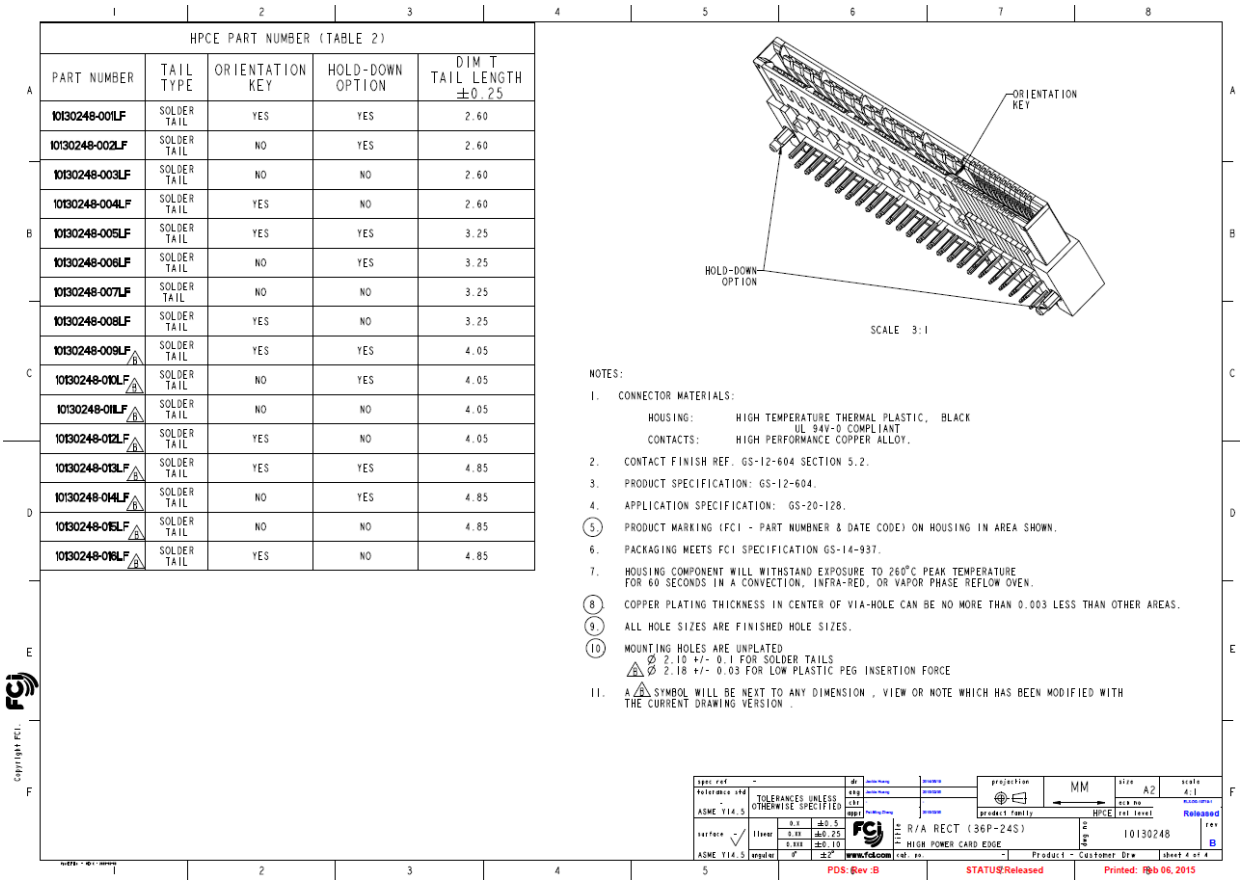

HPCE PART NUMBER (TABLE 2)

PART NUMBER	TAIL TYPE	ORIENTATION KEY	HOLD-DOWN OPTION	DIM T TAIL LENGTH ±0.25
10130248-001LF	SOLDER TAIL	YES	YES	2.60
10130248-002LF	SOLDER TAIL	NO	YES	2.60
10130248-003LF	SOLDER TAIL	NO	NO	2.60
10130248-004LF	SOLDER TAIL	YES	NO	2.60
10130248-005LF	SOLDER TAIL	YES	YES	3.25
10130248-006LF	SOLDER TAIL	NO	YES	3.25
10130248-007LF	SOLDER TAIL	NO	NO	3.25
10130248-008LF	SOLDER TAIL	YES	NO	3.25
10130248-009LF B	SOLDER TAIL	YES	YES	4.05
10130248-010LF B	SOLDER TAIL	NO	YES	4.05
10130248-011LF B	SOLDER TAIL	NO	NO	4.05
10130248-012LF B	SOLDER TAIL	YES	NO	4.05
10130248-013LF B	SOLDER TAIL	YES	YES	4.85
10130248-014LF B	SOLDER TAIL	NO	YES	4.85
10130248-015LF B	SOLDER TAIL	NO	NO	4.85
10130248-016LF B	SOLDER TAIL	YES	NO	4.85

NOTES:

1. CONNECTOR MATERIALS:
   HOUSING: HIGH TEMPERATURE THERMAL PLASTIC, BLACK UL 94V-0 COMPLIANT
   CONTACTS: HIGH PERFORMANCE COPPER ALLOY.
2. CONTACT FINISH REF. GS-12-604 SECTION 5.2.
3. PRODUCT SPECIFICATION: GS-12-604.
4. APPLICATION SPECIFICATION: GS-20-128.
5. PRODUCT MARKING (FCI - PART NUMBNER & DATE CODE) ON HOUSING IN AREA SHOWN.
6. PACKAGING MEETS FCI SPECIFICATION GS-14-937.
7. HOUSING COMPONENT WILL WITHSTAND EXPOSURE TO 260°C PEAK TEMPERATURE FOR 60 SECONDS IN A CONVECTION, INFRA-RED, OR VAPOR PHASE REFLOW OVEN.
8. COPPER PLATING THICKNESS IN CENTER OF VIA-HOLE CAN BE NO MORE THAN 0.003 LESS THAN OTHER AREAS.
9. ALL HOLE SIZES ARE FINISHED HOLE SIZES.
10. MOUNTING HOLES ARE UNPLATED
    Ø 2.10 +/- 0.1 FOR SOLDER TAILS
    B Ø 2.18 +/- 0.03 FOR LOW PLASTIC PEG INSERTION FORCE
11. A B SYMBOL WILL BE NEXT TO ANY DIMENSION , VIEW OR NOTE WHICH HAS BEEN MODIFIED WITH THE CURRENT DRAWING VERSION .

Figure 26. Mating connector drawing page 3

© 2019 Bel Power Solutions & Protection

19. ACCESSORIES

ITEM	DESCRIPTION	ORDERING PART NUMBER	SOURCE
	I²C Utility Windows XP/Vista/7 compatible GUI to program, control and monitor Front-End power supplies (and other I²C units)	ZS-00130	belfuse.com/power-solutions
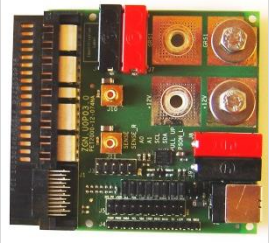	**Evaluation Board** Connector board to operate PTU2000-12-074NA and PTU2000-12-074ND. Includes an on-board USB to I²C converter (use *I²C Utility* as desktop software).	YTM.00046	belfuse.com/power-solutions

For more information on these products consult: tech.support@psbel.com

NUCLEAR AND MEDICAL APPLICATIONS - Products are not designed or intended for use as critical components in life support systems, equipment used in hazardous environments, or nuclear control systems.
TECHNICAL REVISIONS - The appearance of products, including safety agency certifications pictured on labels, may change depending on the date manufactured. Specifications are subject to change without notice.