MELCHER™
The Power Partners.

Mounting Supports
Accessories



Special mounting supports have been designed for the integration of power supplies into switch boards, control panels, printed circuit boards, etc., using adapters for chassis-, DIN-rail, or PCB mounting.

The 19-inch cassette style DC-DC and AC-DC converters can also be chassis-mounted with frontal access by means of a special *Chassis Mounting Plate*, attached to the converters.

The *Universal Mounting Bracket* also fits to most of these cassette type converters, allowing for either vertical-chassis or DIN-rail mounting.

A *Bracket Kit*, consisting of a PCB with screw-terminal connectors and a brackets suitable for either chassis or DIN-rail mounting, is available either for PCB mountable PSR and PSA Switching Regulators with option "Y" pins or for small DC-DC converters up to 15 Watt.

For isolation of the PCB-mountable converters from a double-sided PCB, the use of *Isolation Pads* is recommended, as described below.

RoHS-compliant products are available on request.

Note: All dimensions are in mm, unless otherwise specified.

Table of Contents

Description....1
Chassis and Wall Mounting Plates....2
Universal Mounting Brackets....4
  Series H, M, Q, P, HP, PSL....4
  Series W and X....5
  DIN-Rail Mounting Brackets (DMB)....5
  Chassis Mounting Brackets (CMB)....6
DIN-Rail- and Chassis-Mounting Supports....6
  Chassis Mounting Support (CMB)....7
  DIN-Rail Mounting Support (DMB)....7
  Electrical Description of CMB/DMB for PSR/PSA Series....8
  CMB/DMB for IMX4 / IMS6 Series (with option K)....8
Supports for 7 W Converters....9
  Basic Kit for Chassis Mounting: HZZ00617-G (CMBIMX/S7)....9
  Basic Kit for DIN-Rail Mounting: HZZ00613-G (DMBIMS/X7)....9
  Mounting Instructions for Basic Kit....9
  Double-output models IMX7, IMS7, IML10....10
  Application-Specific Circuitry....10
Supports for 15 W Converters....11
  Basic Kit for Chassis Mounting: HZZ00626-G (CMBIMX15)....11
  Basic Kit for DIN-Rail Mounting: HZZ00628-G (DMBIMX15)....12
  Application-Specific Circuitry....12

bel POWER SOLUTIONS & PROTECTION
a bel group

belfuse.com/power-solutions

Please read our datasheet & drawing disclaimer here.

Chassis and Wall Mounting Plates

For chassis mounting of 19" cassette-style converters, where only frontal access to the mounting screws is given, special chassis mounting plate adapters are available according to the following table and figures 1 to 3.

Table 1: Mounting Plate survey

Case size	Converter series	Part number description	Delivery content	Fig.
M02	M	HZZ01210-G Mounting plate M	Mounting plate XMK085-G 4 countersunk screws M3×6 4 serrated sunk washers	1
H02	H			
Q01	Q			
Q04	P			
Q05	HP			
Q01	Q	HZZ01215-G Mounting plate Q	Mounting plate XMK162-G with brackets 4 countersunk screws M3×6	2
Q04	P			
Q05	HP			
K02 K03	K[1], PSK[1], R[1]	HZZ01213-G Mounting plate K	Mounting plate XMK074 4 countersunk screws M4×10	3
S02 S03	S[1], PSS[1], R[1]			

[1] with Option B1



Fig. 1a
Mounting plate M (HZZ01210-G), connector with faston terminals (HZZ00101-G), secured with retention clips (HZZ01209-G)

Note: The mounting plate K fits to K, S, PSK, PSS, RP, R converters with opt. B1. However, it is possible to order these converters directly with option B. Such converters exhibit the same mounting plate as shown in fig.1.

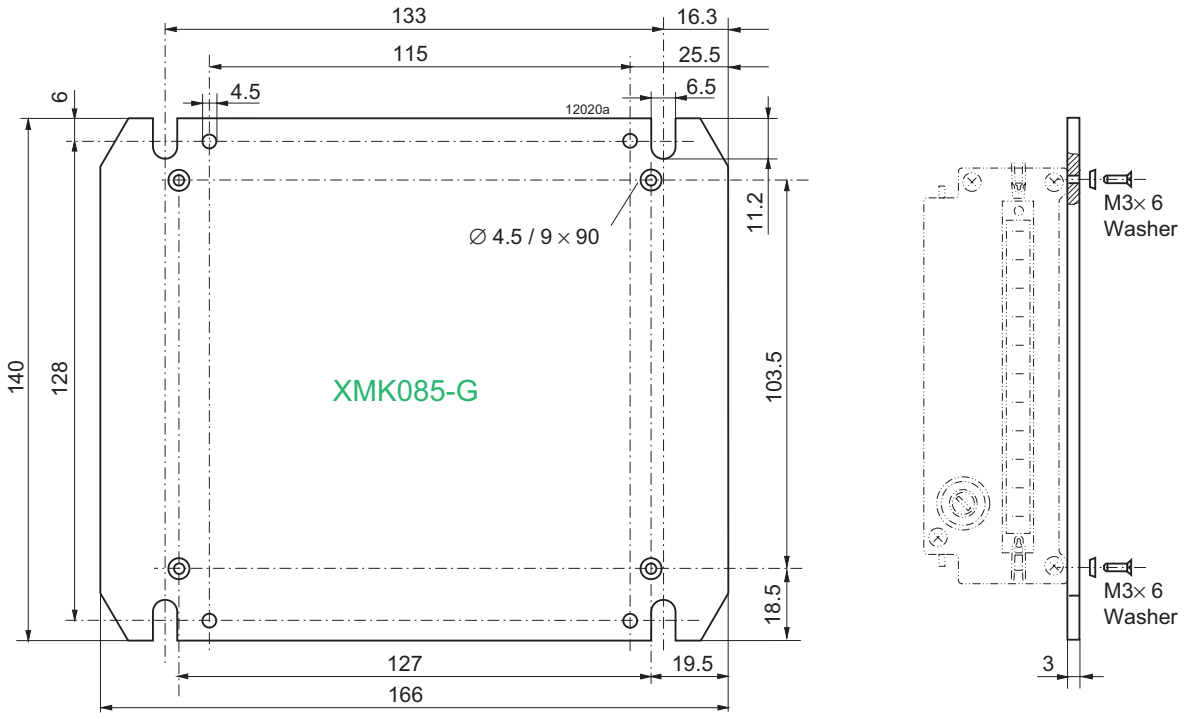

Fig. 1b
HZZ001210 (mounting plate M)
Aluminum, black anodized

© 2021 Bel Power Solutions & Protection

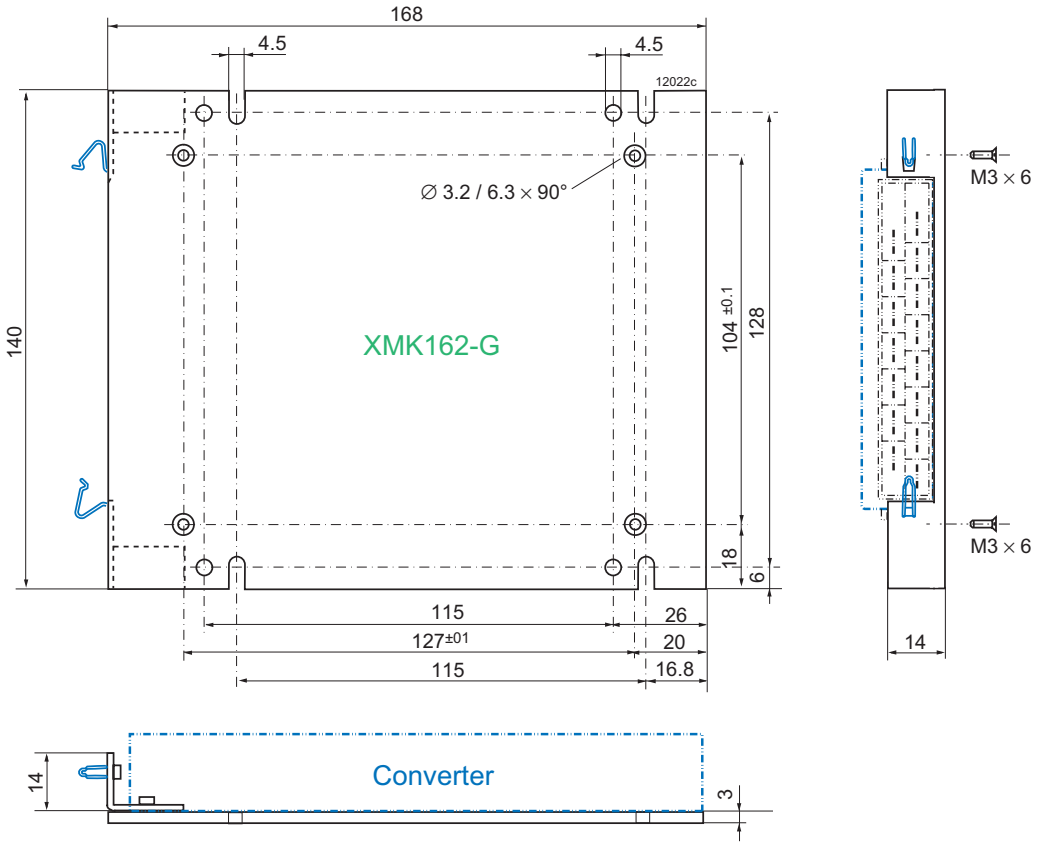

Fig. 2a
HZZ01215-G (mounting plate Q) with integrated connector retention facility using HZZ01229-G (the retention clip Q), Aluminum, black anodized

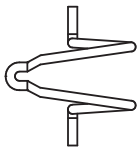

Fig. 2b
HZZ01229-G
Retention clip Q

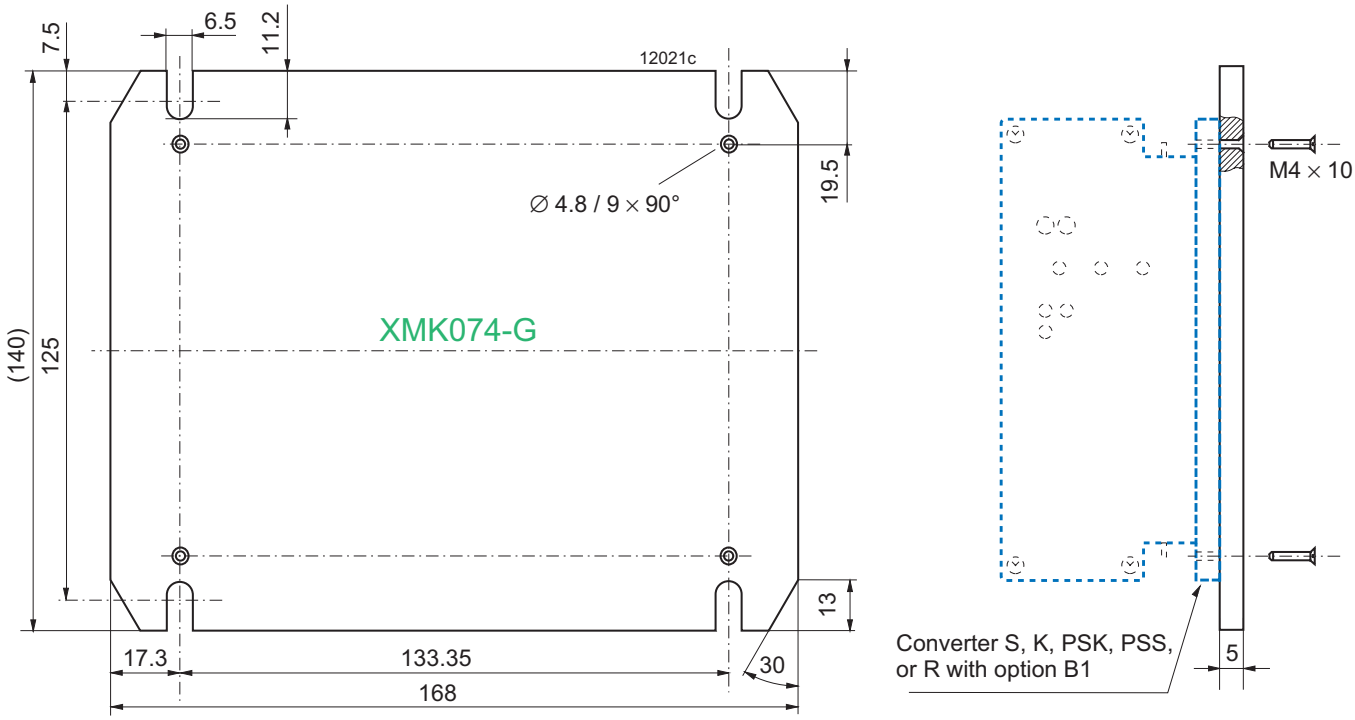

Fig. 3a
HZZ01213-G (mounting plate K)
Aluminum, black anodized

© 2021 Bel Power Solutions & Protection



Fig. 3b
HZZ01215-G with fitted retention clips Q (HZZ01229-G)

Universal Mounting Brackets
(DIN-Rail and Chassis Mounting)

Series H, M, Q, P, HP, PSL

A special universal mounting bracket has been designed for vertical or upright chassis- and DIN-rail mounting of the 19" cassette style converters; see table 2.

Table 2: Universal mounting bracket survey

Case size	Converter series	Part number description	Delivery content
L04	PSL	HZZ00610-G (previously UMB-LHMQ)	Alu-profile (fig. 4b), DIN-rail clamp (fig. 4a), screws and washers
H02, M02	H, M		
Q01, Q04, Q05	Q, P, HP		
W01, X01	W, X	HZZ00618-G (previously UMB-W)	2 brackets (fig. 6), 4 counter sunk screws M4 × 16, 4 washers, and 4 spring washers
		HZZ00624-G (previously DMB-EWG)	DIN-rail clamp left and right (fig. 7), 2 screws M4 × 12, 2 washers, 2 ribbed-lock washers



Fig. 5
DIN-rail mounting with HZZ00610-G

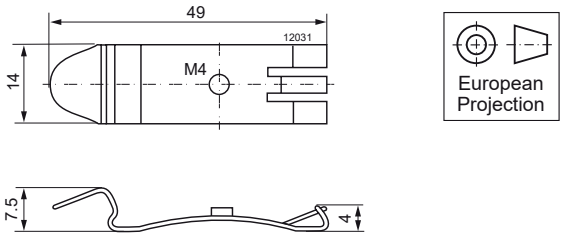

Fig. 4a
DIN-rail clamp XMM162-G, steel, galvanized

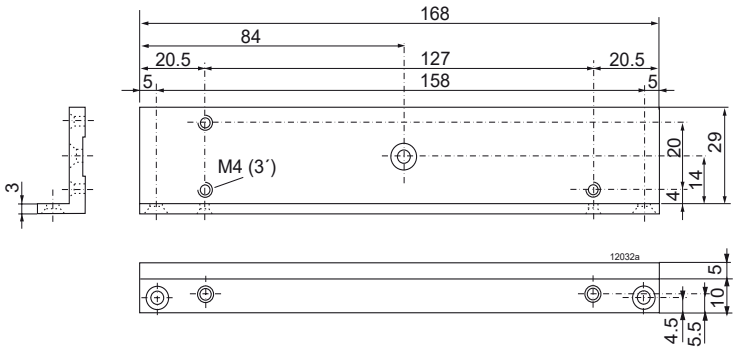

Fig. 4b
Universal mounting bracket XMK159-G, Aluminum, untreated

© 2021 Bel Power Solutions & Protection

Series W and X

Chassis mounting brackets HZZ00618-G (UMB-W) are available; see table 2 and fig. 6.

DIN-rail mounting is possible with the built-in snap fit devices. For heavy-duty railway applications, 2 or better all 4 fixing brackets HZZ00624-G (DMB-EWG) should be fitted; see fig. 7.

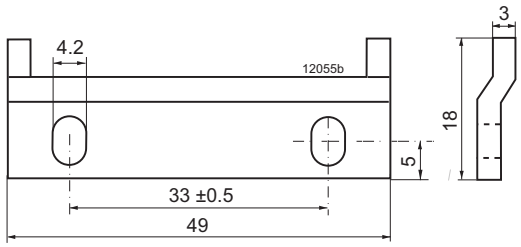

Fig. 6
Universal mounting bracket XMS083-G

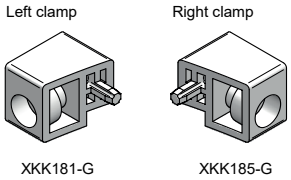

Fig. 7
Additional fixing clamps for railway application

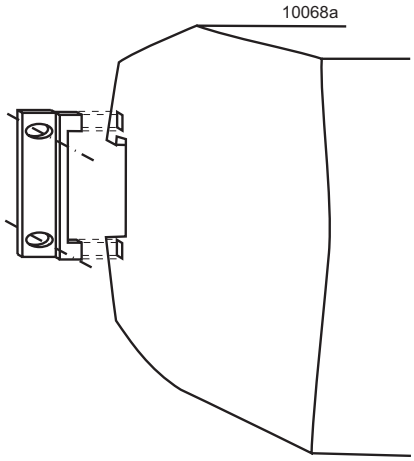

Fig. 8
W unit with chassis-mounting brackets

DIN-Rail Mounting Brackets (DMB)

By means of the mounting kits listed in table 3, converters can be fastened onto a DIN-rail. The kit consists of two aluminum brackets to be mounted on each side of the converter, including a clamp. The kit HZZ00615-G contains two different sets of screws for the adaptation of the brackets to all listed converter series.

Table 3: Mounting bracket survey

Case size	Converter series	Part number description
RCM	RCM60, RCM150, RCM300	HZZ00625-G (previously DMB-RCM)
S01 S02 S03 K01 K02 K03	PSS S HR, ER, HRL, ERL, LR PSK K HRP, ERP, LRP	HZZ00615-G (previously DMB-K/S)
M02 H02 Q01 Q04 Q05	M H Q [1] P [1] HP [1]	HZZ00619-G (previously DMB-MHQ)

[1] Not together with screw-style connectors HZZ00107-G

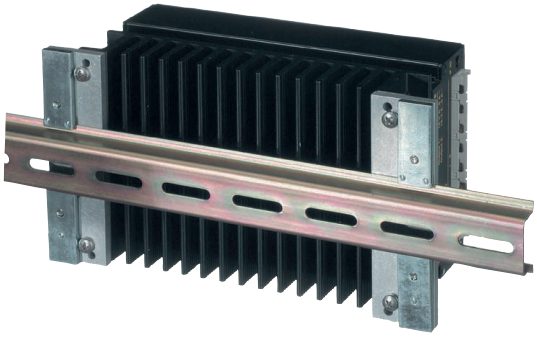

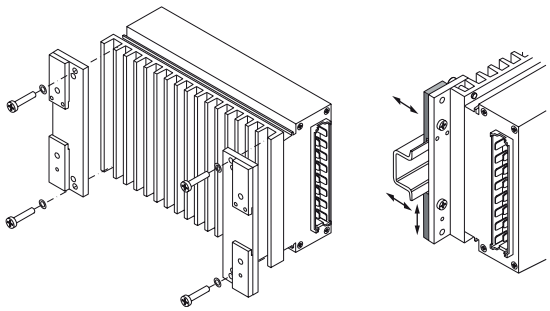

Fig. 9a
Schematic view: Assembly of HZZ00615-G (DMB-K/S)



Fig. 9b
DIN-Rail mounting bracket for RCM series HZZ00625-G

© 2021 Bel Power Solutions & Protection

Chassis Mounting Brackets (CMB)

Series S, HR, HRL, PSS, LR

This mounting kit allows for chassis mounting of the converters listed in table 4, if access is only possible from the front of the chassis.

Note: If space conditions are very tight, option B1 or B can be used instead of the heat sink. Refer to the data sheets of the respective converters.

This kit uses parts of the HZZ00615-G kit (DMB-K/S), since it consists of the same two brackets but without the clamps and fitted the other way round on the heat sink.

Table 4: Mounting bracket survey

Case size	Converter series	Part number description
S01 S02 S03	PSS S HR, HRL, LR	HZZ00616-G (previously CMB-S)



DIN-Rail- and Chassis-Mounting Supports

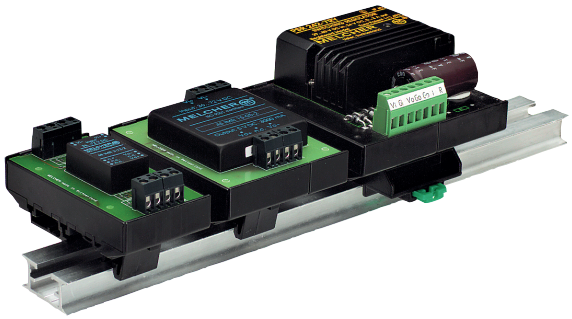

PCB mounting as well as cassette style converters can be chassis- or DIN-Rail mounted by means of mounting bracket adapters. For selection and part numbers refer to table 5.

Note: Customized adapters for other case sizes are available upon request.

Each part number gives a direct indication of the kind of mounting, the type of converter, i.e. the case size, or the output power as well as the possible pin-out and the options according to the relevant converter data. The adaptors are divided into two mechanical types: CMB and DMB.

Note: Application-specific assemblies are available on request: MK001-xxx and MK002-xxx.

Table 5: Mounting support survey

A1 [mm]	A2 [mm]	Case size	Converter series	Chassis-mounting Part number	DIN-mounting Part number	Delivery content
95.0	90.0	A01	PSR, PSA ($V_{i\,max}$ = 40, 60, 80 V)	HZZ00607-G (previously CMBA01-iRY/80)	HZZ00606-G (previously DMBA01-iRY/80)	PCB, screw terminal blocks, 4 diodes, capacitor C1 and C- or D-bracket with screws
			PSA ($V_{i\,max}$ = 144 V)	HZZ00609-G (previously CMBA01-iRY/144)	HZZ00608-G (previously DMBA01-iRY/144)	
50.0	45.0	DIL 24	IMX4 with Option K IMS6 with Option K	HZZ00604-G (previously CMB3W-123)	HZZ00602-G (previously DMB3W-123)	PCB, screw terminal blocks, C- or D-bracket with screws
75.5	67.5	1" × 2"	IMX7, IMS7 IML10 [1]	HZZ00617-G (previously CMBIMS/X7)	HZZ00613-G (previously DMBIMS/X7)	See Basic Kit HZZ00617-G / HZZ00613-G
		1.6" × 2"	IMX15, IMS15	HZZ00626-G (previously CMBIMX15)	HZZ00628-G (previously DMBIMX15)	See Basic Kit HZZ00626-G / HZZ00628-G

[1] Obsolete model

© 2021 Bel Power Solutions & Protection

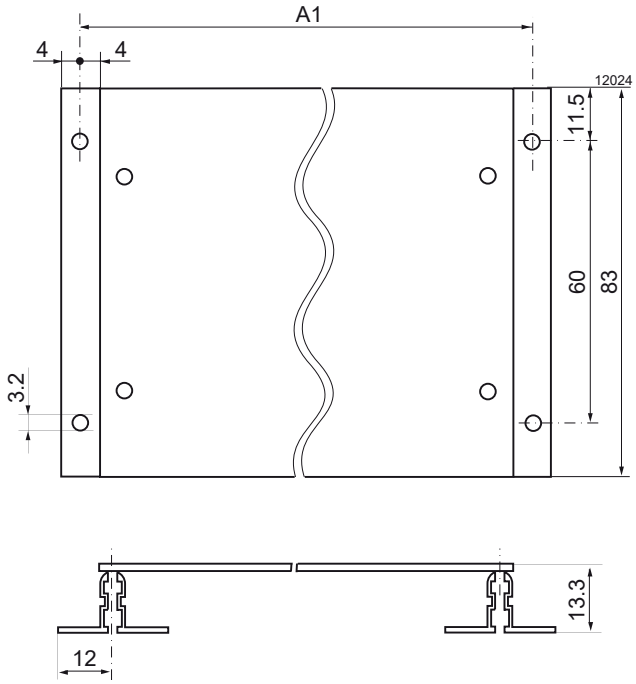

Fig. 10
Dimensions of chassis mounting support (CMB)
Bracket: Aluminum, black finish

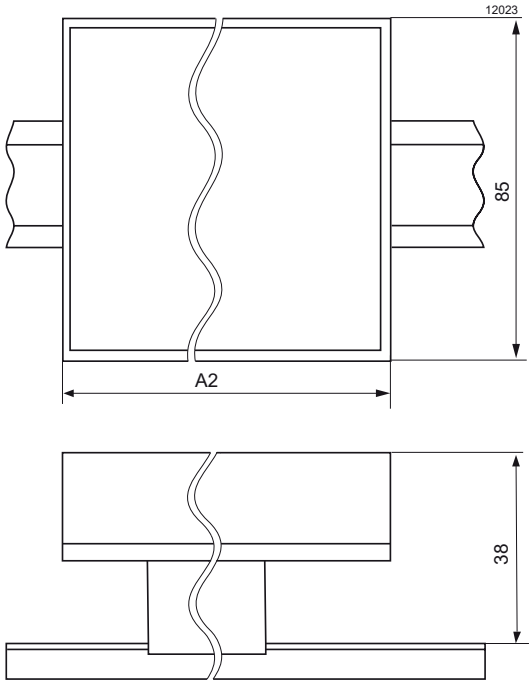

Fig. 11
Dimensions of DIN-rail mounting support (DMB)
Bracket: Polycarbonate, black

Chassis Mounting Support (CMB)

The kit consists of a PCB for the converter, a set of screw terminals allowing for easy electrical connection and two aluminium profiles, attached to the PCB by means of four screws, which serve as the chassis mounting bracket. Five different versions according to table 5 are available.

Details on the layout of the PCBs and diagrams are given in the description below.

DIN-Rail Mounting Support (DMB)

The DMB kit differs from the CMB version by a bracket suited for DIN-rail mounting. The black plastic body of the bracket holds the PCB by means of a snap-in device. Fife different versions according to table 5 are available.

Details on the layout of the PCBs and diagrams are given in the description below.

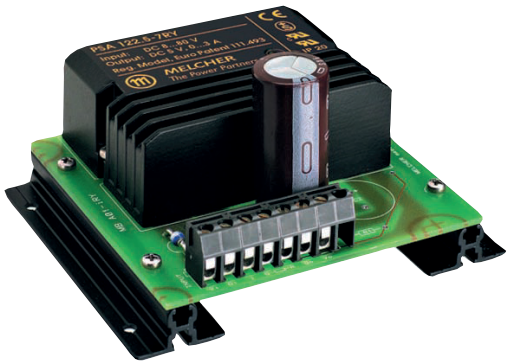

© 2021 Bel Power Solutions & Protection

Electrical Description of CMB/DMB for PSR/PSA Series

This bracket is designed for non-isolated switching regulators of the PSR and PSA Series in the A01 case size, equipped with option Y. Technical details and further information, e.g. max. input voltage etc., are described in the PSR/PSA data sheet. The use of the optional inhibit- and R-function (external output voltage adjustment with R1) is possible, and the device can be driven either from a DC-source or from a transformer secondary voltage.

- DC-input: Consider the forward voltage drop across the rectifier diodes (also providing reverse polarity protection). Capacitor C1 compensates for the negative input impedance of the converter in case of long connection wires.
- AC-input: The recommended transformer secondary voltage is 48 VAC for PSR/PSA (with $V_{i\,max}$ = 80 V) and 72 VAC for PSA (with $V_{i\,max}$ = 144 V)

Exception: Input voltage for PSA55 is 20 VAC.

Note: PSA55 and PSR362 require an additional capacitor (C2) of at least 470 µF.

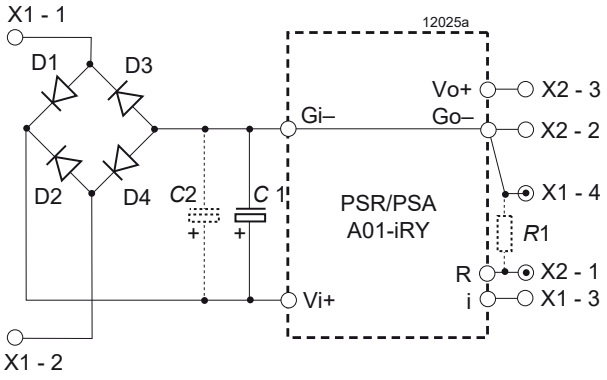

Fig. 12
CMB/DMB circuit diagram for PSR/PSA Series

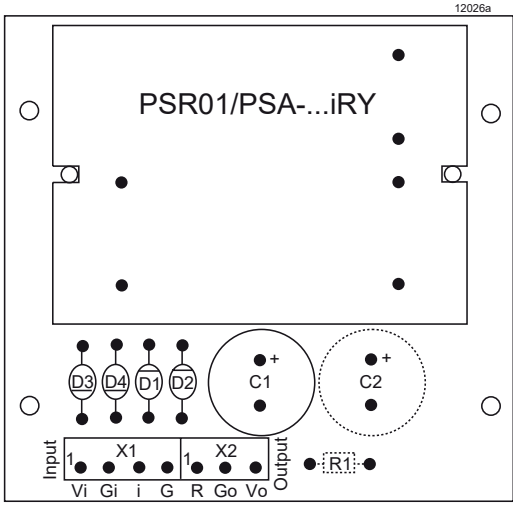

Fig. 13
CMB/DMB PCB layout for PSR/PSA Series

CMB/DMB for IMX4 / IMS6 Series (with option K)

This support is designed for galvanically isolated DC-DC converters of the IMX4 and IMS6 Series (both with option K) in DIL 24 cases with one or two output voltages. The pin configuration of the converter groups single, double, and dual, and all technical converter details are described in the data sheets.

Depending on the application input transient protection may be incorporated (e.g. an appropriate Transzorb diode D1) .

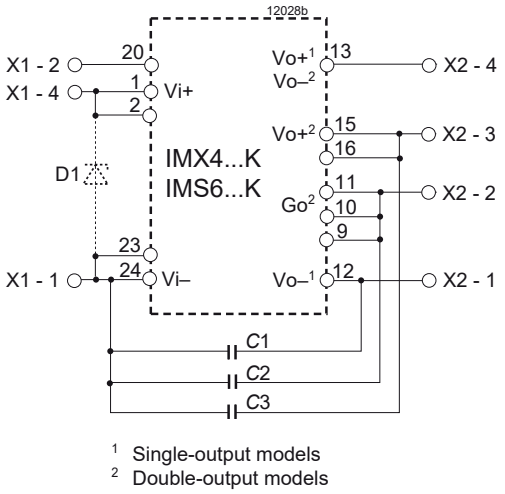

1 Single-output models
2 Double-output models

Fig. 14
Circuit diagram of CMB/DMB for IMX4 / IMS6 Series

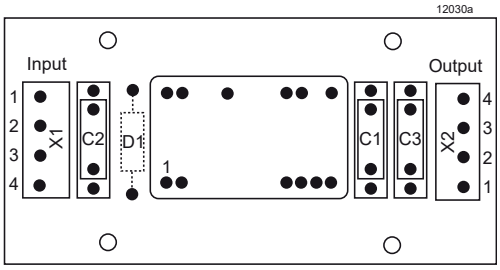

Fig. 15
Print layout of CMB/DMB for IMX4 / IMS6 Series

© 2021 Bel Power Solutions & Protection

Supports for 7 W Converters

Basic Kit for Chassis Mounting: HZZ00617-G (CMBIMX/S7)

For use with 1" × 2" DC-DC converter types: IMX7, IMS7, IML10.

The basic kit contains the following:

- Two mounting rails, 83 mm
- Four screws M 2.5 × 6
- Four nuts M 2.5
- PCB
- Three 2-pole terminal blocks (2 × for X1 terminal, 1 × for X3 terminal)
- One 3-pole terminal block for X2 terminal
- Three wire jumpers 5.08 mm (positions B1, B4, B5)
- One wire jumper 10.16 mm (position D1)
- Six wire jumpers 6.8 mm (positions L2, L4, L6)
- Installation instruction BZM20005

Basic Kit for DIN-Rail Mounting: HZZ00613-G (DMBIMS/X7)

For use with 1"× 2" DC-DC converter types: IMS7, IMX7, IML10.

The basic kit contains the following:

- DIN-mounting support for 35 mm DIN-rail systems
- PCB
- Three 2-pole terminal blocks (2 × for X1 terminal, 1× for X3 terminal)
- One 3-pole terminal block for X2 terminal
- Three wire jumpers 5.08 mm (positions B1, B4, B5)
- One wire jumper 10.16 mm (position D1)
- Six wire jumpers 6.8 mm (positions L2, L4, L6)
- Installation instruction BZM20004-G

Mounting Instructions for Basic Kit

Single-output models IMX7, IMS7, IML10:

- Solder the wire jumpers into positions as below:
  1. D1 (10.16 mm)
  2. B1 (5.08 mm), inhibit.

     Note: This jumper should be fitted, if the inhibit is not actively used. An open inhibit disables the converter.
  3. L2-A and L2-B, L6-A and L6-B (6.8 mm)
  4. L4-A and L4-B (6.8 mm), only necessary, if the R-input is used.
- Solder terminal blocks
  5. X1: Position Vi+/ Vi–, 2-pole terminal block
  6. X1: Position i/n.c., 2-pole terminal block (only necessary in the case of remote inhibit)
  7. X3: Position Vo+/ Vo–, 2-pole terminal block
  8. X2: Position n.c., R, Vo–, 3-pole terminal block (only necessary in the case of V_o adjustment by e.g. an external voltage source)
- Solder the selected DC-DC converter
- Mount PCB onto rails by using the 4 screws and nuts or snap PCB onto the DIN mounting support.
- Perform function test

© 2021 Bel Power Solutions & Protection

Double-output models IMX7, IMS7, IML10

- Solder the wire jumpers into positions as below:
  1. D1 (10.16 mm)
  2. B1 (5.08 mm), inhibit

     Note: This jumper should be fitted, if the inhibit is not actively used. An open inhibit disables the converter.
  3. L2-A and L2-B, L6-A and L6-B, L4-A and L4-B (all 6.8 mm)
- For applications with both outputs in parallel:
  4. Place/solder jumpers B4 and B5, (5.08 mm)
- Solder terminal blocks
  5. X1: Position Vi+/ Vi–, 2-pole terminal block
  6. X1: Position i/R (Trim), 2-pole terminal block (only necessary in the case of remote inhibit or output voltage trimming by an external voltage source)
  7. X3: Position Vo1+/ Vo1–, 2-pole terminal block
  8. X2: Position n.c/Vo2+/Vo2–, 3-pole terminal block
- Solder the selected DC-DC converter
- Mount PCB onto rails by using the 4 screws and nuts or snap PCB onto the DIN mounting support.
- Perform function test

Application-Specific Circuitry

The CMB/DMB assembly for IMX/S7 series offers a variety of additional external circuitries which may be implemented onto the PCB. See circuit diagram and consult the IMX/S7 data sheet.

Depending upon the application the following peripheral additions can be made:

- Reverse polarity protection by a series diode D1.
- Improved input transient protection according to IEC/EN 61000-4-5, level 2, by chokes L1 or L2-A, L2-B (EMC version) and capacitor C1.
- Remote inhibit.

  Note: If the inhibit is not actively used the inhibit has to be connected to Vi– by jumper B1.
- External output voltage trimming/adjustment

  Single-output models:

  a) V_o – adjustment in the range of 70/75 – 100% of $V_{o\,nom}$ by resistors RX3 or RX4 or combinations of RX3/RX4.

  b) V_o – adjustment in the range of 100 – 105% of $V_{o\,nom}$ by resistors RX1 or RX2 or combinations of RX1/RX2.

  Double-output models:

  a) V_o – trimming by resistor R2 in the range of 100 – 105% of $V_{o\,nom}$

  b) V_o – trimming in the range of 70/75 – 100% of $V_{o\,nom}$ by a current diode together with a Zener diode D2 applicable for 24/48IMS7 and 20/40IMX7 types.
- Reduced output ripple (by approx. factor 5) by using chokes L3/L5 together with electrolytic capacitors C8/C9.
- Improved electromagnetic emission EN 55022, class B, lead length to load 1 m (class A for 110IMX7 types).

  This requires all capacitors and output chokes as per circuit diagram fig. 16, whereby the coupling capacitor C10 connected to Vi– via jumper B2 is foreseen for 24/48IMS/L types and 20/40/70IMX7 models.

  For 110IMX7 types the coupling capacitor C11 or C12 should be used connected to Vo+ via jumper B3.

Notes:

– For single-output models or double-output models with both outputs in parallel, one filter set (L5 or L6-A/L6-B) together with C7 and C9 is sufficient.
– Wire jumpers B2 and B3 should not be mounted together onto the PCB as this would cause a short circuit.
– The coupling capacitors C10 or C11/12 should be Y2 ceramic types to maintain the outputs being SELV.

© 2021 Bel Power Solutions & Protection

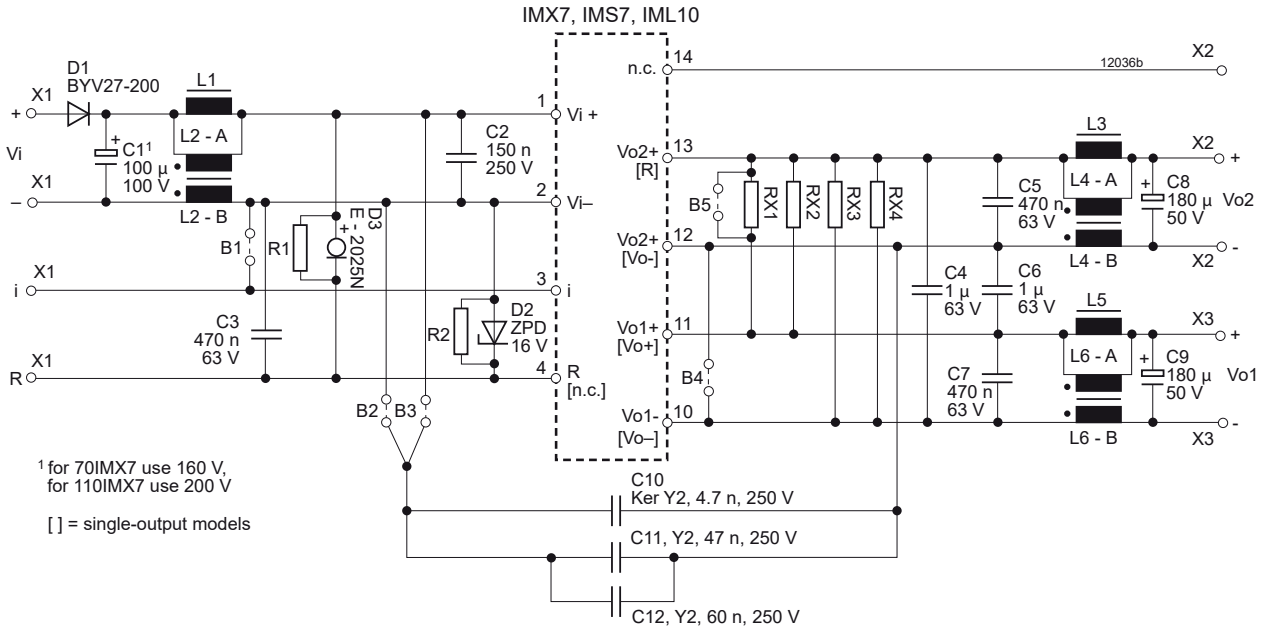

Fig. 16
CMB/DMB circuit diagram with IMX7, IMS7, IML10

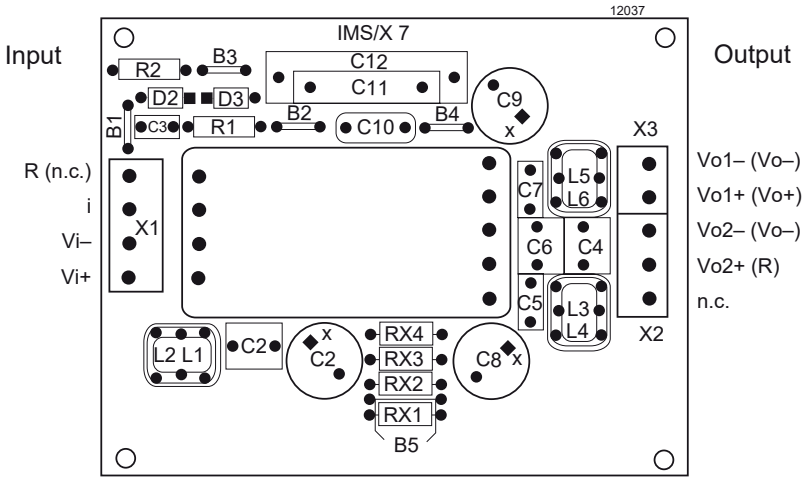

Fig. 17
CMB/DMB arrangement of the terminals on the PCB for IMX7, IMS7, IML10.
Pin designations for single-output models are shown in brackets.

Supports for 15 W Converters

Basic Kit for Chassis Mounting: HZZ00626-G (CMBIMX15)

For use with 1.6" × 2" DC-DC converter types: IMS15, IMX15, IMY15.

The basic kit contains the following:

- Two mounting rails, 83 mm
- Four screws M 2.5 × 6
- Four nuts M 2.5
- PCB
- Four 2-pole terminal blocks (2 × for X1 terminal, 2 × for X2 terminal)
- Five wire jumpers 6.35 mm (could be fitted on positions L2-A, L2-B, B1…B6 depending on required configuration)
- Circuit diagram no. ZGN.00262.0SD

© 2021 Bel Power Solutions & Protection

Basic Kit for DIN-Rail Mounting: HZZ00628-G (DMBIMX15)

For use with 1.6" × 2" DC-DC converter types: IMX15, IMY15, IMS15.

The basic kit contains the following:

- DIN-mounting support for 35 mm DIN-rail systems
- PCB
- Four 2-pole terminal blocks (2 × for X1 terminal, 2 × for X2 terminal)
- Five wire jumpers 6.35 mm (could be fitted on positions L2-A, L2-B, B1…B6 depending on required configuration)
- Circuit diagram no. ZGN.00262.0SD

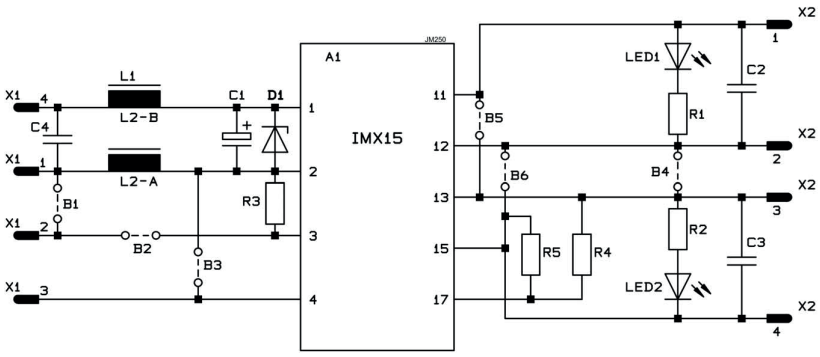



Fig. 18
CMB/DMB circuit diagram with IMS15, IMX15, IMY15

Application-Specific Circuitry

The HZZ00626-G and HZZ00628-G assemblies offer a variety of external circuitries which may be implemented onto the PCB.

See circuit diagram and consult the IMX15 data sheet on the web site.

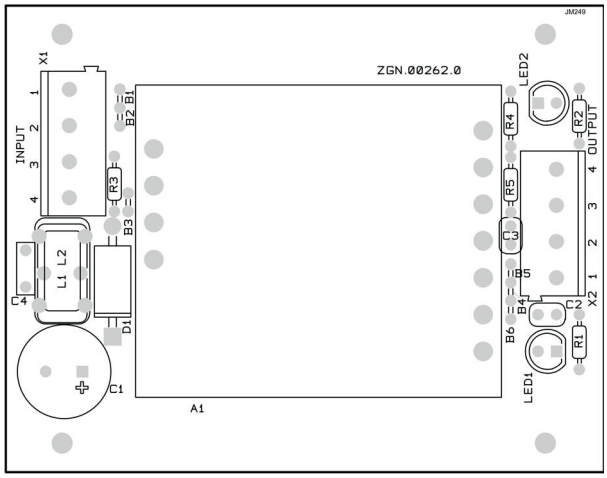

Fig. 19
CMB/DMB arrangement of the terminals on the PCB for IMX15, IMY15, IMS15

NUCLEAR AND MEDICAL APPLICATIONS - These products are not designed or intended for use as critical components in life support systems, equipment used in hazardous environments, or nuclear control systems.

TECHNICAL REVISIONS - The appearance of products, including safety agency certifications pictured on labels, may change depending on the date manufactured. Specifications are subject to change without notice.

© 2021 Bel Power Solutions & Protection