700DNC40-24-xG

4 kW DC-DC Down Converter

The Bel Power Solutions 700DNC40-24-xG is a 4kW DC/DC Converter that creates DC voltages in hybrid and electric vehicles suitable to power low voltage accessories.

Liquid cooled or convection cooled DC/DC converter operates at input voltages from 400 to 850 VDC and delivers power range up to 4000 W / 3300 W (liquid / convection cooled model).

Features include very high efficiency, high reliability, low output voltage noise, and excellent dynamic response to load/input changes.

KEY FEATURES & BENEFITS

- Very high efficiency up to 93 %
- Input voltage range: 400 – 850 VDC
- Up to 4 kW power
- Full galvanic isolation between input and output
- Liquid or convection cooled models available
- CAN bus serial interface
- Adjustable output voltage
- Over temperature, output overvoltage and overcurrent protection, input and output reverse polarity protection
- Protection degree IP65 and IP67
- E-Mark approval no.: E13*10R00*10R05*13669*00

APPLICATIONS

- Hybrid and electric vehicles
- Medium through heavy duty, on and off highway vehicles

Please read our datasheet & drawing disclaimer here.

1. MODEL SELECTION

MODEL	DESCRIPTION
700DNC40-24-8G	Liquid cooled model
700DNC40-24-CG	Convection cooled model
700DNC40-CON-KIT-7G	Mating connectors kit – Signal connector housing and pins, HV connector assembled with 3 m cable including HVIL lines
700DNC40-CON-KIT-8G	Mating connectors kit – Signal connector housing and pins, HV connector assembled with 3 m cable
700DNC40-CON-KIT-9G	Mating connectors kit - housing and pins

2. INPUT SPECIFICATIONS

PARAMETER	DESCRIPTION / CONDITION	MIN	NOM	MAX	UNIT
Input Voltage		400	700	850	VDC
Input Current				11	ADC
Efficiency	@ Vin = 700 VDC, Vo = 28 V, Io = 120 A	92			%
Input Line Interruption	Converter shutdown			390	VDC
Input Capacitance			30		µF
Inrush current	External pre-charging circuit required				

3. OUTPUT SPECIFICATIONS

PARAMETER	DESCRIPTION / CONDITION	MIN	NOM	MAX	UNIT
Output Voltage	Vo to be trimmed via CAN BUS, 10 bit resolution	22	28	32	VDC
Output Current	@ 28 VDC Liquid cooled model Convection cooled model		 143 120		ADC
Output Power	Liquid cooled model Convection cooled model			4000 3300	W
Line Regulation	Vinmin - Vinmax, @ 60 A, Tamb = 45°C	- 0.20		+ 0.20	VDC
Load Regulation	Iout 10 to 90% load, T_coolant = 70°C	- 0.15		+ 0.15	VDC
Output Voltage Set Point	@ 60 A, Tcoolant = 25°C	27.9	28	28.1	VDC
Thermal Drift		-0.1		+0.1	%/°C
Periodic and Random Deviation	@ 28 VDC / Nominal load (Differential Mode 20 MHz) CAN high / low (Differential Mode 20 MHz)			460 * 300 *	mVp-p
Transient Response	Load step 1: 10 to 50 % and back Load step 2: 50 to 100 % and back Voltage over/under shoot: Response time within 1 % of V_{OSET}:	 -1400		 +1400 1000	 mV µs
Turn-on Overshoot	Vonom, <100 ms			5	%
Redundant Parallel Operation	Up to 4 converters operating in parallel			16	kW
Remote Sense	Cable Drop (V) @ Maximum Load			0.5	V
Turn-On Delay	Rise time (Cext = 0 µF) Power-on-delay (From applying DC input voltage to Vo = 90 %) Power-on-time from PS_WAKE UP (From PS_WAKE UP ON to Vo = 90% of nom)			200 1 3	ms s s
Turn-Off Timing	PS_WAKEUP delay; (monotonic Vo fall)	0		100	ms
Capacitive Load	@ 28 VDC		0	7200	µF

* With external capacitors 47 µF (Electrolytic cap) & 1 µF (X7R Ceramic cap) connected to measuring point

4. PROTECTION SPECIFICATIONS

PARAMETER	DESCRIPTION / CONDITION		MIN	NOM	MAX	UNIT
Output Over-Current Protection	Constant current	Liquid cooled model Convection cooled model		146 123		A
Output Over-Voltage Protection	Latch type, max. OV duration 1ms		32		34	V
Output Under-Voltage Protection	Max. UV duration 1s, than hiccup		18		20	V
Over-Temperature Protection	Converter shutdown	Liquid cooled model Convection cooled model	80 50			°C
Input and Output Reverse Polarity Protection	Protective elements connected in series					
Input Fuse Protection	DC Input: internal primary fuse			20		A
Input Low Line Protection	Turn ON threshold Turn OFF threshold		390 370	400 380	410 390	VDC
Input Overvoltage Protection	Recovery: Vin re-cycling or PS_WAKEUP		855		870	V

5. MONITORING AND CONTROL SIGNALS

PARAMETER	DESCRIPTION / CONDITION	CRITERION
CAN BUS SAE J1939	250 kBit/s or 500 kBit/s available	
Remote sense signals	Sense positive (+24 V SENSE) Sense negative (-24 V SENSE)	0.5 V compensation
Address bits	Internally pulled up to LOGIC HIGH (3.3 V, 100 kohm)	Adr. 0 Adr. 1
PS_WAKEUP	Logic input signal	LV BAT VOLTAGE
HVIL function	HVIL pins shorted internally	Part of HV connector
CAN_SPEED	CAN speed selection Internally pulled up to LOGIC HIGH (3.3 V, 100 kohm)	Logic Low – 250 kBit/s Logic High – 500 kBit/s

6. SAFETY, REGULATORY AND EMI SPECIFICATIONS

PARAMETER	DESCRIPTION / CONDITION	CRITERION
E-Mark Approval	E13*10R00*10R05*13669*00	
Insulation	Basic: 3000 VDC, 20 MΩ Basic: 3000 VDC, 20 MΩ	Input-to-Protective Earth Input-to-Output
Radiated Emission	UN ECE R10 4th Edition	ESA level
Electrostatic Discharge	IEC 61000-4-2	Performance Criterion B
Radiated Electromagnetic Field	IEC 61000-4-3 (10 V/m), SAE J1113/21(100 V/m)	Performance Criterion B Class B
Electrical Fast Transient	IEC 61000-4-4, Level 2 (+/-2 kV, 2.5 kHz) ISO 7637-2; ISO 7637-3, ISO 16750-2	Performance Criterion B
RF Conducted Immunity	Level 3 (10 V, 0.15…80 MHz, AM 80%, 1kHz)	Performance Criterion A
RF Disturbances Immunity	SAE J1113-41 ISO11452-4 (1-400 MHz, 60 mA)	Class A Class B

© 2023 Bel Fuse Inc.

7. ENVIRONMENTAL SPECIFICATIONS

PARAMETER	DESCRIPTION / CONDITION		MIN	NOM	MAX	UNIT
Altitude	Operating: 62 kPa absolute pressure Non-Operating:18.6 kPa absolute pressure				3600 12200	m
Operating Temperature	Liquid cooled:	T_coolant with no derating T_amb @ full load, with no power dating	-40 -40		+70 +85	°C
	Convection cooled:	T_amb with no power derating	-40		+45	
Storage Temperature			-40		+95	°C
Humidity	SAE J1455					
Shock	SAE J1455					
Vibration	SAE J1455, MIL-STD-202G					

8. CONNECTORS

PARAMETER	DESCRIPTION / CONDITION	MANUFACTURER	MPN
Input Connector (IN)	High voltage connecter with HVIL function	TYCO	2141272-1; KEY A
Output Connector (OUT)	Male dual terminal thread M8		
CAN BUS and Signal Interface (CTRL)	Panel mounted	TYCO	776276-1

PIN	SIGNAL DESCRIPTION
1	PS_WAKEUP
2	ADR0
3	ADR1
4	CAN_SPEED
5	CAN_H
6	CAN_L
7	+SENSE
8	-SENSE

Signal Connector Pin Description

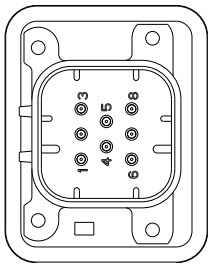

Signal Connector

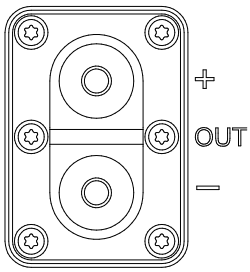

Output Connector

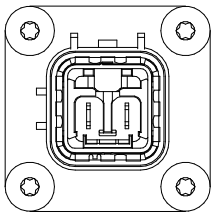

Input Connector

9. COOLING SPECIFICATIONS

PARAMETER	DESCRIPTION / CONDITION
Maximum Inlet Coolant Temperature	+70°C
Coolant Medium/Mixture	50/50 Propylene or Ethylene Glycol/Water
Min. Coolant Flow	0.0208 l/s (0.33 GPM)
Max. Coolant Flow	0.1166 l/s (1.85 GPM)
Max. Coolant Pressure	20 psi
Max. Pressure Drop	1 psi

10. MECHANICAL SPECIFICATIONS

PARAMETER	LIQUID COOLED MODEL	CONVECTION COOLED MODEL
Dimensions (W x H x D)	270 x 113 x 343 mm	350 x 187.7 x 343 mm
Weight	11 kg	22 kg
Enclosure	IP65 and IP67	

MECHANICAL DRAWINGS - LIQUID COOLED MODEL

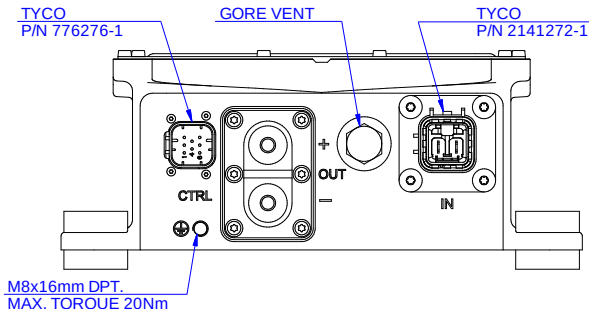

Front View

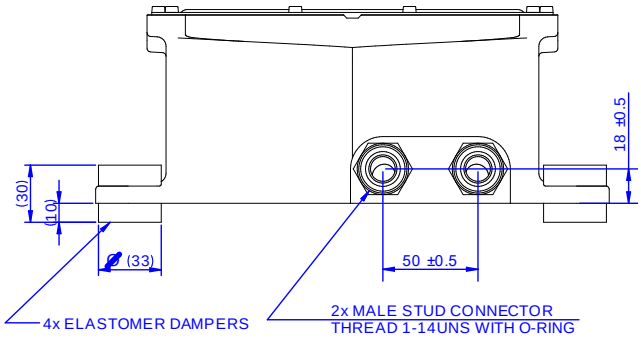

Rear View

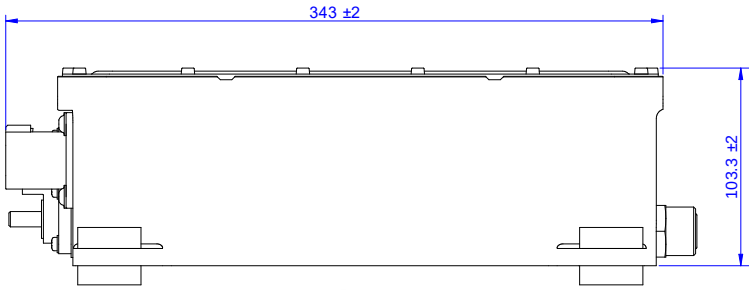

Side View

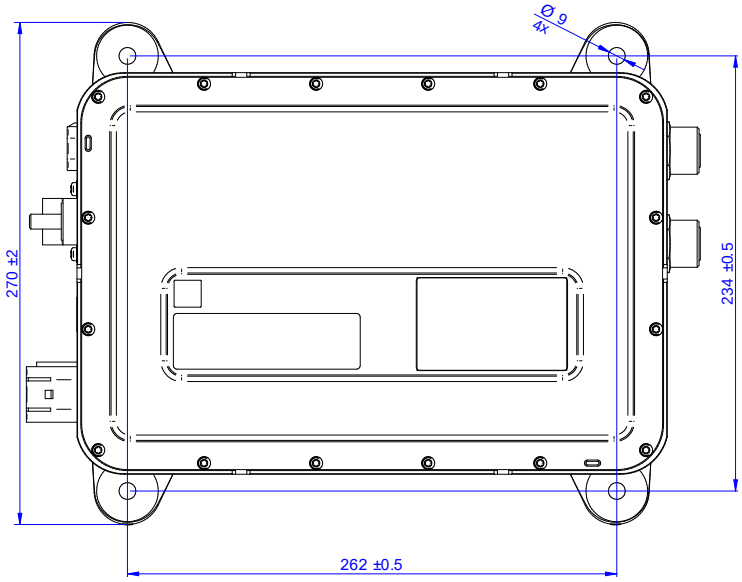

Top View

© 2023 Bel Fuse Inc.

MECHANICAL DRAWINGS - CONVECTION COOLED MODEL

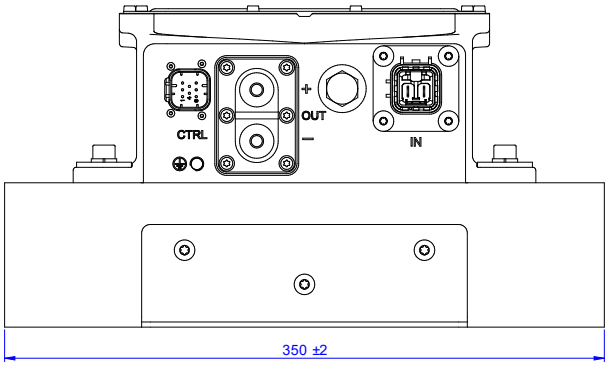

Front View

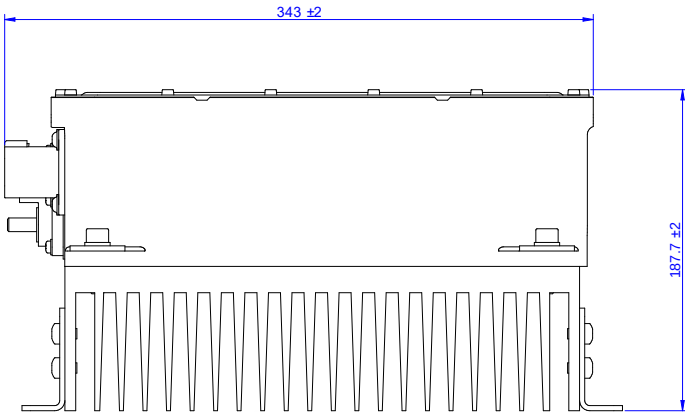

Side View

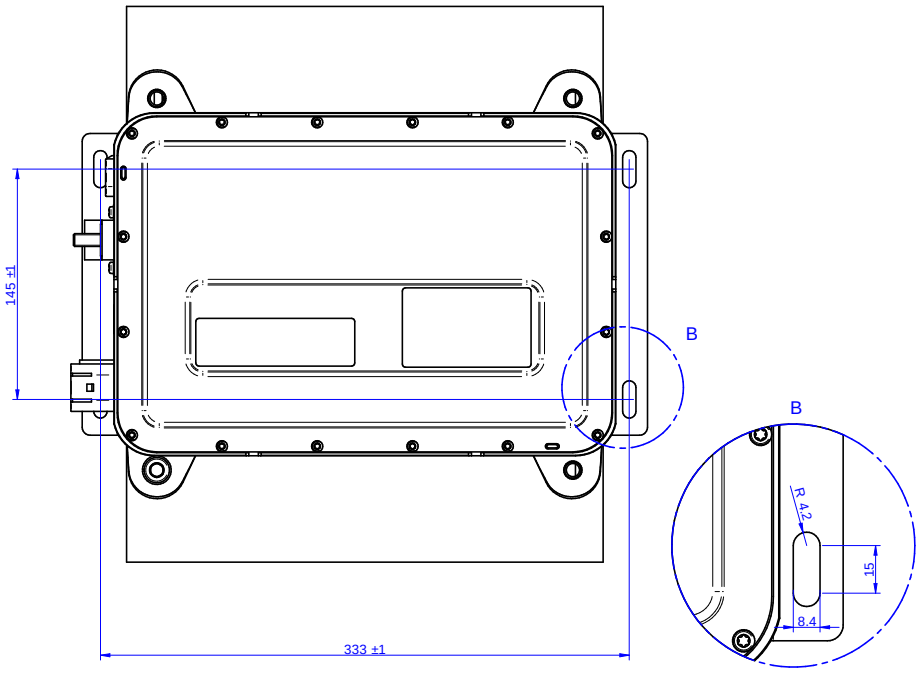

Top View

For more information on these products consult: tech.support@psbel.com

NUCLEAR AND MEDICAL APPLICATIONS - Products are not designed or intended for use as critical components in life support systems, equipment used in hazardous environments, or nuclear control systems.
TECHNICAL REVISIONS - The appearance of products, including safety agency certifications pictured on labels, may change depending on the date manufactured. Specifications are subject to change without notice.