DFC15 Series

Dual Output DC-DC Converters

LAST TIME BUY

The dual-output DFC15 Series of DC-DC converters are designed to provide a wide range of PCB power solutions where positive and negative outputs are required.

The converter features fully isolated and filtered input and outputs for low noise. Trim and remote On/Off features give flexibility to designs.

The ultra-wide input range, from 20 to 72 volts, allows use in most industrial and communication applications.



RoHS Compliant

Key Features & Benefits

- RoHS compliant
- Remote on/off and trim
- Overcurrent and overtemperature protected
- Water-washable case
- Efficiencies to 82%
- 1544 V isolation
- Ultra-wide range input (> 3:1)

bel POWER SOLUTIONS & PROTECTION
a bel group

belpowersolutions.com

Please read our datasheet & drawing disclaimer here.

1. MODEL SELECTION

MODEL	INPUT RANGE [VDC]		OUTPUT		
	MIN	*MAX*	*[VDC]*	*[mA]*	*POWER [W]*
DFC15U48D15	20	72	±15	±500	15

Model numbers highlighted in yellow are not recommended for new designs.

2. GENERAL SPECIFICATIONS [1]

PARAMETER	CONDITIONS / DESCRIPTION	MIN	TYP	MAX	UNITS
ON/OFF Function [2]					
ON Logic Level or Leave Pin Floating		8.0			VDC
Off Logic Level				2.0	VDC
Input Resistance			100		kΩ
Converter Idle Current ON/OFF Pin Low			2		mA
Isolation [3]					
Breakdown Voltage	Input to Output	1544			VDC
Leakage Current			10		µA
Capacitance	Input to Output		450		pF
Output Trim Function					
Input Resistance			40		kΩ
Programming Range		+5, -34			%
Environmental					
Case Operating Range (T_C)	No Derating	-40		100	°C
Storage Range		-55		105	°C
Thermal Impedance [4]			10		°C/W
Thermal Shutdown Case Temperature			105		°C
General					
MTBF	Calculated		800000		hrs
Weight			2.3/65		oz/g
Chassis Mounting Kit			CM2B2		

NOTES

1. All parameters measured at Tc = 25 °C, nominal input voltage and full rated load unless otherwise noted.
2. The logic ON/OFF pin is Open Collector TTL, CMOS, and relay compatible. The input to this pin is referenced to Pin 2, -Input and is protected to +100 VDC.
3. Case is tied to Pin 1, + Input.
4. The case thermal impedance is specified as the case temperature rise over ambient per package watt dissipated.

LAST TIME BUY

3. INPUT SPECIFICATIONS[1]

PARAMETER	CONDITIONS / DESCRIPTION	MIN	TYP	MAX	UNITS
Voltage Range		20	48	72	VDC
Reflected Ripple [2, 3]			660		mA_{pp}
Input Current	Full Load / No Load		381 / 5		mA
Efficiency			85		%
Switching Frequency			120		kHz
Maximum Input Overvoltage, 100 ms maximum				85	VDC
Turn –on Time, 1% Output Error				20	ms

4. OUTPUT SPECIFICATIONS[1]

PARAMETER	CONDITIONS / DESCRIPTION	MIN	TYP	MAX	UNITS
Output Voltage			±15		VDC
Output Voltage Range		±14.90	±15.00	±15.10	VDC
Rated Load Range		0.0		±500	mA
Load Regulation[4]	0% -100% Full Load		0.15	0.4	%
Cross Regulation[5]	25%-100% Load		3.0		%
Line Regulation	Vin = Min-Max VDC		0.04	0.2	%
Short Term Stability[6]			< 0.02		% / 24 Hrs
Long Term Stability			< 0.2		% / kHrs
Input Ripple Rejection[7]			>60		dB
Noise[2], 0-20 MHz bw	with 0.1µF External Capacitor with no External Capacitor		30 70		mV_{pp}
Temperature Coefficient			50	150	ppm / °C
Overvoltage Clamp			18		VDC
Short Circuit Protection to Common for all Outputs	Continuous protection with current limiting and thermal overload techniques				

NOTES

1. All Parameters measured at Tc=25 °C, nominal input voltage and full rated load unless otherwise noted.
2. Noise measurement bandwidth is 0-20 MHz.
3. An input capacitor must be used for proper operation of the converter. See the DFC15 Series Application Notes on sizing the input capacitor.
4. Load regulation for the outputs is specified as the voltage change when both outputs are changed from maximum to minimum at the same time.
5. Cross regulation is defined as the change in one output when the other output is changed from full load to 25% of full load. The converter can be run at no load on either or both outputs with no damage.
6. Short term stability is specified after a 60-minute warmup at full load, constant line and recording the drift over a 24-hour period.
7. The input ripple rejection is specified for DC to 120 Hz ripple with a modulation amplitude of 1% of Vin.

LAST TIME BUY

© 2017 Bel Power Solutions & Protection

5. DFC10 SERIES APPLICATION NOTES

EXTERNAL CAPACITANCE REQUIREMENTS

An external capacitance is required for operation of the DFC15 Series. For maximum performance, it is recommended that the DFC15 Series use a capacitor of sufficient ripple current capacity connected across the input pins. To meet the reflected ripple requirements of the converter, an input impedance of less than 0.05 Ohms from DC to 200 kHz is required. External output capacitance is not required for operation, however it is recommended that 1 µF to 10 µF of tantalum and 0.001 to 0.1 µF ceramic capacitance be selected for reduced system noise. Additional output capacitance may be added for increased filtering, but should not exceed 400 µF.

REMOTE ON/OFF OPERATION

The remote ON/OFF pin may be left floating if this function is not used. It is recommended to drive this pin with an open collector arrangement or a relay contact. When the ON/OFF pin is pulled low with respect to the -INPUT, the converter is placed in a low power drain state. Do not drive this input from a logic gate directly; there is a 100KV internal pull-up resistor to a 9 volt source.

OUTPUT TRIM

The TRIM pin may be used to adjust the output +5% to -34% from the nominal setting. This function allows adjustment for voltage drops in the system wiring. As well 5.2 volt Figure 2 shows the proper connections to use this function. A trim pot value of 10KV or a fixed resistor may be used. If the TRIM function is not required the pin may be left floating.

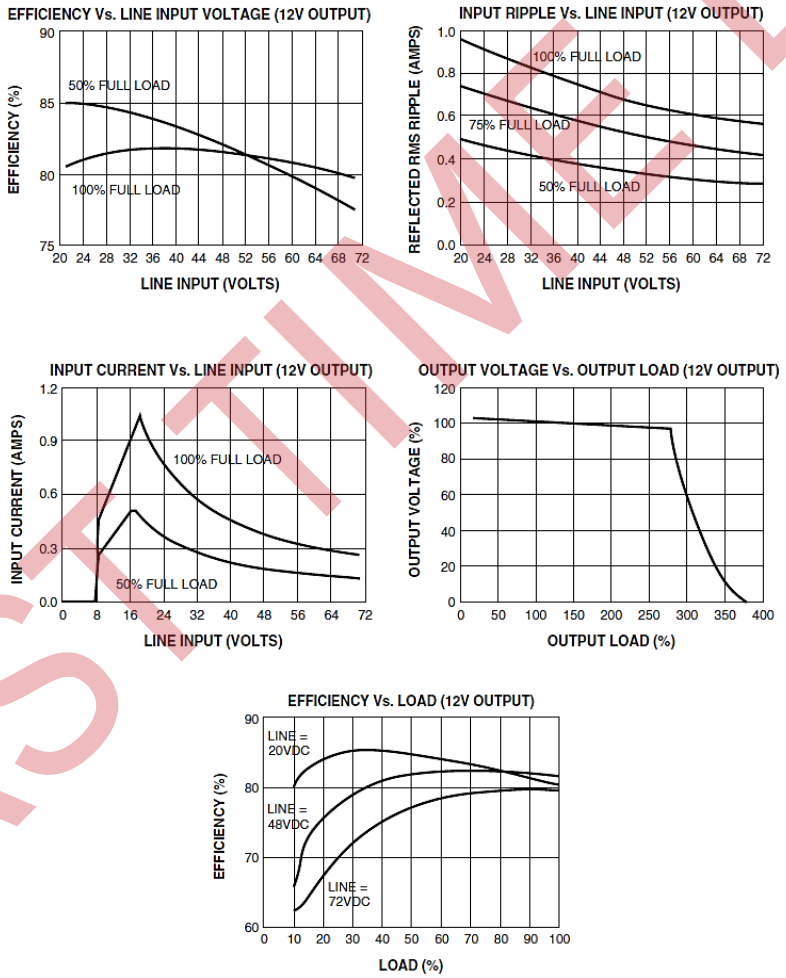

Figure 1. Typical Performance (Tc = 25°C, Vin = Nom VDC, Rated Load)

LAST TIME BUY

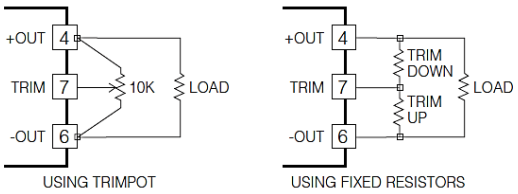

Figure 2. Output Trim

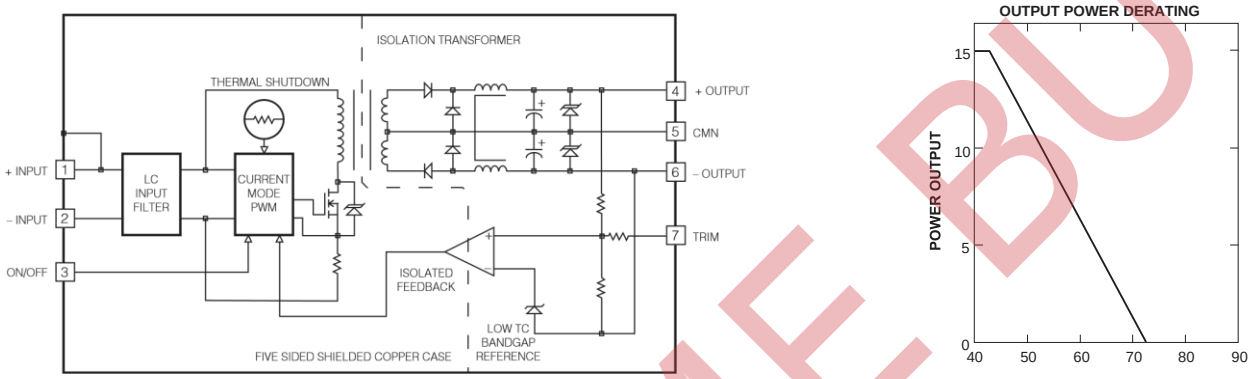

Figure 3. Typical Performance: (Tc = 25°C, Vin = Nom VDC, Rated Load)

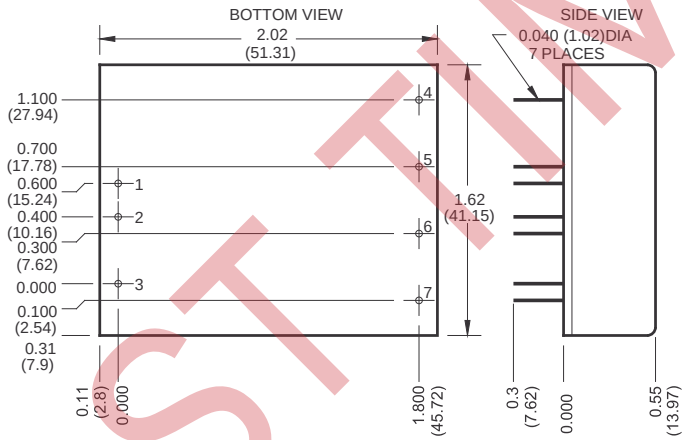

Figure 4. Mechanical Dimensions

PIN	FUNCTION
1	+INPUT
2	-INPUT
3	ON/OFF
4	+OUTPUT
5	COMMON
6	-OUTPUT
7	TRIM

Mechanical tolerances unless otherwise noted:

X.XX dimensions: ±0.010 inches
X.XXX dimensions: ±0.005 inches

LAST TIME BUY

For more information on these products consult: tech.support@psbel.com

NUCLEAR AND MEDICAL APPLICATIONS - Products are not designed or intended for use as critical components in life support systems, equipment used in hazardous environments, or nuclear control systems.
TECHNICAL REVISIONS - The appearance of products, including safety agency certifications pictured on labels, may change depending on the date manufactured. Specifications are subject to change without notice.

bel POWER SOLUTIONS & PROTECTION
a bel group

Asia-Pacific +86 755 298 85888
Europe, Middle East +353 61 225 977
North America +1 408 785 5200

© 2017 Bel Power Solutions & Protection