3-PHASE WYE (Y) CONNECTION
240/415 VAC INPUT / 48 VDC OUTPUT
AC-DC POWER SHELVES
SPSTET4-11, SPSTET4-12, SPSTET4-13, SPSTET4-14

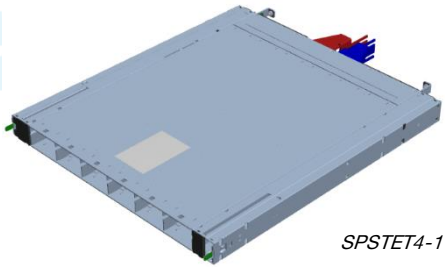

SPSTET4-11

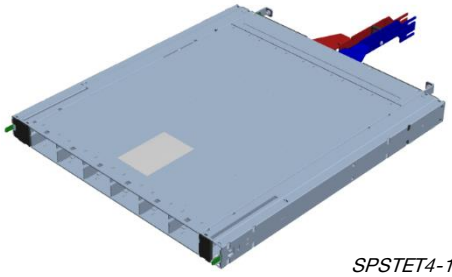

SPSTET4-12

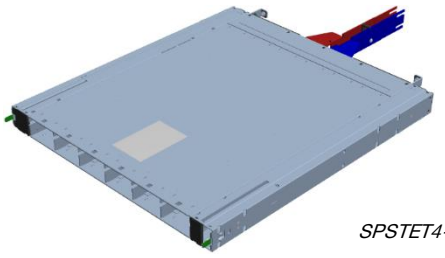

SPSTET4-13

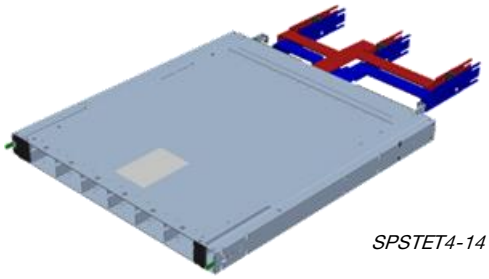

SPSTET4-14

The SPSTET4 power-shelf solutions provide rectification, system management, and power distribution functions while maintaining high reliability and offering flexibility for future expansion.

The power shelf can be configured with up to six hot-swap capable TET4000-48-069RAH AC/DC-DC power modules that convert AC input to 54.5 VDC output for powering IT racks, OCP racks and Data centers.

The shelf has an optional slot for a Network Attached Controller, providing control functions and monitoring through a 10/100 MB base Ethernet port. It can be connected directly to the data center management network.

Key Features & Benefits

- Two 3-Phase WYE inputs, each input supports 3 power modules
- Power modules are hot-swap capable
- Power shelf and power modules support CANBus communication for control, programming and monitoring
- Power modules implement the following protections: over temperature, output over voltage and over current
- Dimensions w/o busbar: 535 x 47 x 602 mm (21.06 x 1.85 x 27.7 in)

Applications

- IT racks
- OCP racks
- Data centers

RoHS Compliant

bel POWER SOLUTIONS & PROTECTION
a bel group

belfuse.com/power-solutions

Please read our datasheet & drawing disclaimer here.

1. GENERAL BEL POWER SHELF REFERENCE TABLE

			INPUT					
			AC (Y) 277/480 VAC	AC (Y) 240/415 VAC	AC (Δ) 208 VAC	AC (1-Phase) 3x 230 VAC	- 48 VDC	+380 VDC
OUTPUT	+12 VDC	Triple Busbar Straight	SPSPFE3-05G	SPSPFE3-15*	SPSPFE3-09	-	SPSPFF3-03*	SPSPFE3-13*
		Single Busbar Straight	SPSPFE3-06G	SPSPFE3-16*	SPSPFE3-10	SPSTET4-02	SPSPFF3-02*	SPSPFE3-12*
		Single Busbar Offset [1]	SPSPFE3-08	SPSPFE3-14*	SPSPFE3-11	-	SPSPFF3-01	SPSPFE3-07
	+48 VDC	Single Busbar Offset Short [2]	SPSTET4-01	**SPSTET4-11**	SPSTET4-03*	-	N/A	SPSTET4-04*
		Single Busbar Offset Long [1]	SPSTET4-07	**SPSTET4-12**	-	-	N/A	-
		Single Busbar Straight Long	SPSTET4-09	**SPSTET4-13**	-	-	N/A	-
		Triple Busbar Straight Long	SPSTET4-08	**SPSTET4-14**	SPSTET4-17*	-	N/A	-
	+380 VDC	Connector Type	SPSTET4-05*	-	SPSTET4-06*	-	-	N/A

[1] Mates with V2
[2] Mates with V2 shallow rack

** Available on request requiring short design cycle.*

NOTE: Other datasheets contain alternative shelf configurations, check factory for availability.

2. ORDERING INFORMATION

MODEL	AC INPUT (WYE CONFIGURATION)	DC OUTPUT	# OF BUSBAR BLADES	CONTROLLER
SPSTET4-11	3-phase, 200 – 240 / 346 – 415 VAC	48 VDC	Single Offset Short	No
SPSTET4-11C	3-phase, 200 – 240 / 346 – 415 VAC	48 VDC	Single Offset Short	Yes
SPSTET4-12	3-phase, 200 – 240 / 346 – 415 VAC	48 VDC	Single Offset Long	No
SPSTET4-12C	3-phase, 200 – 240 / 346 – 415 VAC	48 VDC	Single Offset Long	Yes
SPSTET4-13	3-phase, 200 – 240 / 346 – 415 VAC	48 VDC	Single Straight Long	No
SPSTET4-13C	3-phase, 200 – 240 / 346 – 415 VAC	48 VDC	Single Straight Long	Yes
SPSTET4-14	3-phase, 200 – 240 / 346 – 415 VAC	48 VDC	Triple Straight Long	No
SPSTET4-14C	3-phase, 200 – 240 / 346 – 415 VAC	48 VDC	Triple Straight Long	Yes

3. TECHNICAL DATA

PARAMETER	DESCRIPTION / CONDITION
Input	3-phase, 200 – 240 / 346 – 415 VAC Line to Line input with Neutral line [1]
AC Inlet Configuration	2 AC Inlets. Each inlet powers 3 power modules
Auxiliary AC Outlet	3 pcs. low power AC outlet providing 200 – 240 VAC output with max. 6 A – 10 A, Protected by T 10 A – F 15 A / 500 VAC Fuse (serviceable) When T_A: +45 °C to +55 °C, Output load current must be derated to 75%.
Redundant Configuration	6+0 configuration
Rated Power	24060 W [2]
Output Connection	Single output blade for +54.5 VDC output (SPSPTET4-11, -12, -13) Triple output blade for +54.5 V (SPSPTET4-14)
Standby Output	60 W (Standby output 12 V / 5 A)
Communication	CANBus
NAC Controller	Network Attached Controller (optional accessory)

[1] Power modules are connected Line to Neutral.
[2] Rated Power is reduced as per current share accuracy characteristic. See TET4000-48-069RAH Datasheet.

4. SAFETY WARNING

The user assumes all responsibility and liability for proper and safe handling of the goods. Further, the user indemnifies Bel Power Solutions Inc. from all claims arising from the handling or use of the goods. Persons handling the product(s) must have electronics training and observe good engineering practice standards.

CAUTION: Multiple power source. Disconnect all power cords before servicing.

5. REFERENCE DOCUMENTS

DOCUMENT NUMBER	DESCRIPTION
BCD.01051	TET4000-48-069RAH Datasheet
BCM.00498	TET4000-48-069RAH Installation Instruction
BCA.00231.0	TET4000-48-069RAH CAN Communication Manual
BCA.00318	NAC1026-01 Network Attached Controller Documentation
BCA.00257.0	SPSTET4-0x CAN Communication Manual
BCM.00567	SPSTET4-1x Installation Instruction

6. OVERVIEW

The SPSTET4 is a 1OU height power shelf. It can be configured with up to six hot-swap capable TET4000-48-069RAH AC/DC-DC power modules that convert standard AC input to a 54.5 VDC output.

The power shelf and power module support CANBus communication for control, programming, and monitoring. The power shelf and power module are connected to the same CANBus interface. Refer to the respective CAN Communication Manual for additional information.

The power shelf has a slot for a Network Attached Controller (NAC) for providing control functions and monitoring through a 10/100 MB base Ethernet port. It is hot-pluggable and supplied via the 12 V standby output of the power modules. The NAC can be configured through a web interface; the monitoring and control functions are accessed through SNMPv3.

© 2020 Bel Power Solutions & Protection

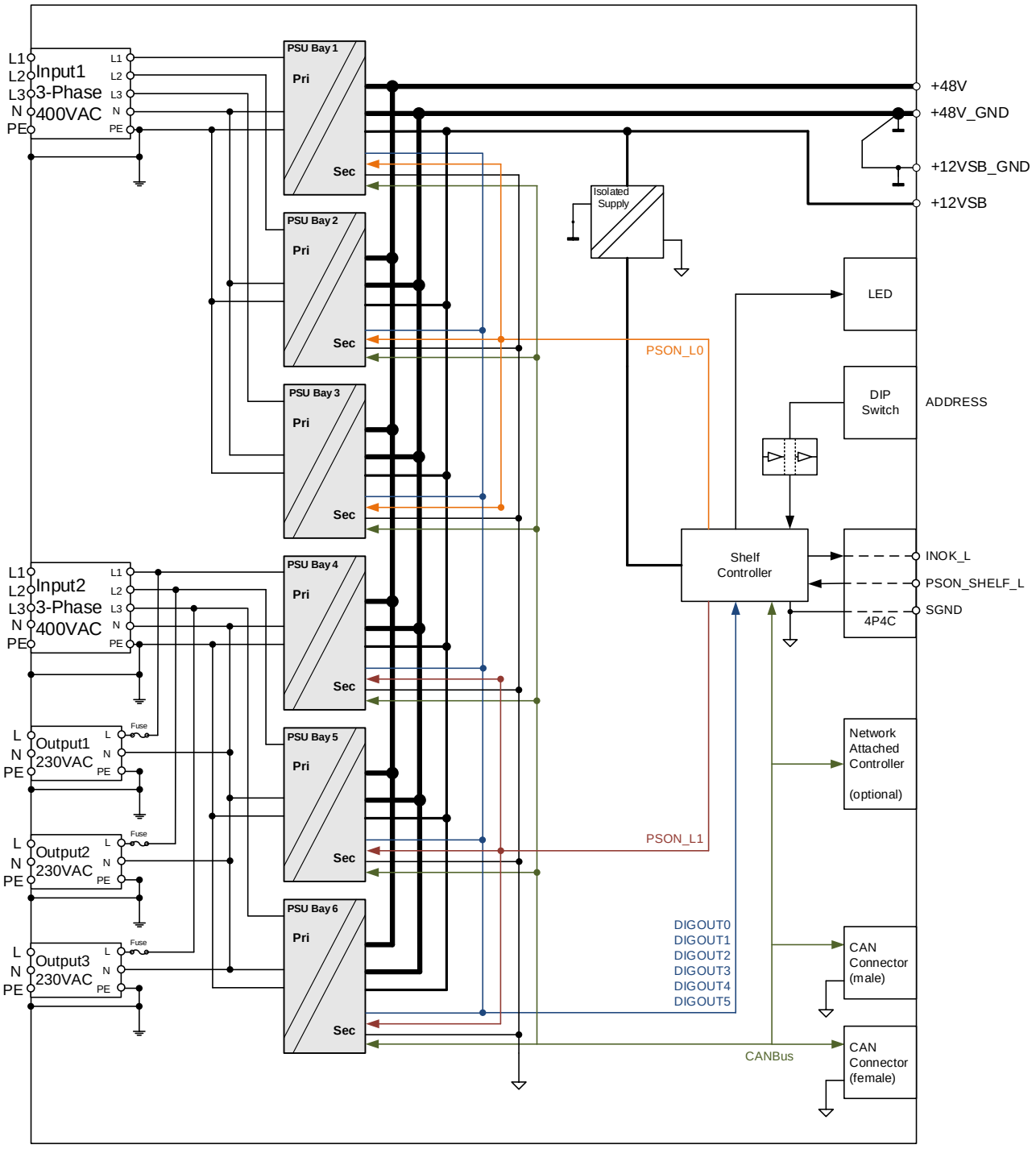

Figure 1. SPSTET4 Block Diagram

7. INPUT SPECIFICATIONS

PARAMETER	DESCRIPTION / CONDITION	MIN	NOM	MAX	UNIT
Input Connector (J1107, J1108)					
AC Nominal Input Voltage	Line to Line Input		400		VAC
AC Input Voltage Ranges	Line to Neutral Input	180		264	VAC
Max Input Current	Per line			30	Arms
Input Frequency		47	50 / 60	63	Hz

8. OUTPUT SPECIFICATIONS

PARAMETER	DESCRIPTION / CONDITION	MIN	NOM	MAX	UNIT
Main Output V1 (Output Bus Bar)					
Nominal Output Voltage			54.5		VDC
Voltage Regulation	Programmable PSU module	-12		+6.5	% Vout nom
Nominal Output Power	6+0 configuration, $T_a < 45°C$			24000	W
Derated Output Power	6+0 configuration, $T_a = 55\ °C$			18000	W
Nominal Output Current	6+0 configuration, $T_a < 45°C$			440	ADC
Derated Output Current	6+0 configuration, $T_a = 55\ °C$			330	ADC
Standby Output VSB (J1204)					
Output Voltage			12		VDC
Voltage Regulation		-5		+5	% Vout nom
Output Power				60	W
Output Current				5	ADC
Auxiliary AC Outlet (J1202, J1206, and J1207)					
AC Output Voltage (J1202)	L1 to Neutral		230		VAC
AC Output Voltage (J1206)	L2 to Neutral		230		VAC
AC Output Voltage (J1207)	L3 to Neutral		230		VAC
AC Output Current (J1202)	L3 to Neutral			6	Arms
AC Output Current (J1206, and J1207)	L1, L2 to Neutral			10	Arms
Fuse Protection per Line (F1201)	Serviceable (10 A / 500 VAC Time Lag fuse)				
Fuse Protection per Line (F1206, and F1207)	Serviceable (15 A / 500 VAC Fast-Acting fuse)				

NOTE: When T_A: +45 °C to +55 °C, Output load current must be derated to 75%.

© 2020 Bel Power Solutions & Protection

8.1. PROTECTION (PER POWER MODULE)

PARAMETER	DESCRIPTION / CONDITION	MIN	NOM	MAX	UNIT
Input Fuses (L+N)	Not user accessible, fast-acting (F)		30		A
OV Threshold V_1	Hardware protection	64	67	70	VDC
OV Latch Off Time V_1				1	ms
Nominal Power Limitation	Vin > 180Vac, Ta ≤ 45°C, V_1 ≥ 48 VDC	4000	4100		W
Nominal Current Limitation	Vin > 180Vac, Ta ≤ 45°C, V_1 ≥ 48 VDC	73	76		A
Power Limit Blanking Time	Time until power limit is reduced to nominal value		5		ms
Power limit during oversubscription V_1	Maximum duration 5 ms	4400	4500		W
Current limit during Oversubscription V_1	Maximum duration 5ms	83	86		A
Max Short Circuit Current V_1	V_1 < 10 VDC			83 [3]	A
Short Circuit Latch Off Time	Time to latch off when in short circuit or output under voltage (V_1 < 42 VDC)		20		ms
UV Threshold V_1	Output under voltage protection	42.5	43	43.5	VDC
V_1 Output under voltage protection delay time	$V_1 < V_{1\ UV}$		20		ms
Over Temperature on Critical Points	Inlet Ambient Temperature PFC Primary Heatsink Temperature Secondary Sync Mosfet Temperature Secondary OR-ing Mosfet Temperature			60 90 90 100	°C
UV Threshold V_{SB}	Output under voltage protection standby	11	11.2	11.3	VDC
Current Limitation V_{SB}	Standby over current limit		5.5		A

[3] Limit doesn't include effects of main output capacitive discharge

8.2. LOGIC SIGNALS

J3202 PINOUT

PIN	FUNCTION	DESCRIPTION
1	DNC	Do Not Connect
2	INOK_L	Active-low output Low = At least 1 power module has input in range High = Otherwise
3	PSON_SHELF_L	Active-low input Low = Turn-on main output V1 of power modules High = Turn-off main output V1 of power modules
4	SGND	Signal ground

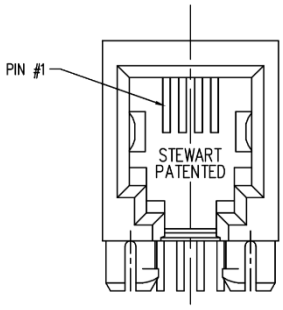

Signal Connector (4P4C Modular Jack) Pin Out

MAXIMUM RATINGS

SYMBOL	DESCRIPTION	MIN	NOM	MAX	UNIT
$V_{I/O}$	I/O Voltage	0		24	V
$I_{I/OL}$	I/O Sink Current			20	mA

I/O CHARACTERISTICS

SYMBOL	DESCRIPTION	MIN	NOM	MAX	UNIT
V_{IL}	High-level input voltage	1.5			V
V_{IH}	Low-level input voltage			0.8	V
V_{OL}	High-level output voltage		3.1[4]		V
V_{OH}	Low-level output voltage, @ 10 mA Sink Current	0.2			V
V_{OH}	Low-level output voltage, @ 20 mA Sink Current	0.4			V

SHELF I/O CIRCUITRY

All I/O are implemented as open collector with a weak pull-up. The I/O are internally pulled up to 3.3 V via a 10 kΩ resistor.
The schematic drawing represents the internal circuit of the shelf.
External pullup resistors to higher voltages may be added. When selecting external pullups, please consider the maximum ratings.

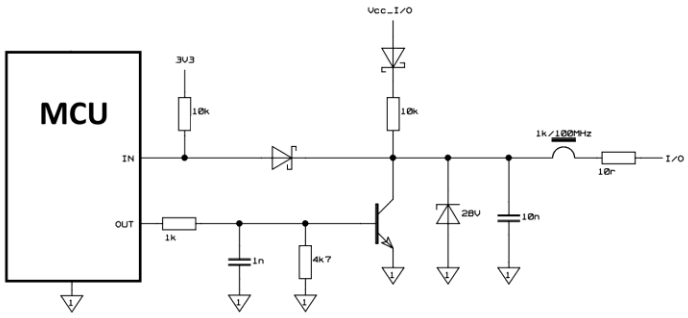

Figure 1. I/O Circuitry

[4] Without external pullup.

© 2020 Bel Power Solutions & Protection

9. COMMUNICATION

Communication to the power shelf and the power modules is via CANBus. The power-modules also use CANBus for its active current share function. For further information please refer to the CAN Communication Manual documents (BCA.00257.0 and BCA.00231.0).

9.1. J1201 PINOUT

D-Sub 9 PIN OUTS (J1201)	FUNCTION	DESCRIPTION
1	NC	NC
2	CAN_L	Dominant Low
3	CAN_GROUND	Ground
4	NC	NC
5	CAN_SHIELD	Shield, Optional
6	CAN_GROUND	Ground, Optional
7	CAN_H	Dominant High
8	NC	NC
9	NC	NC

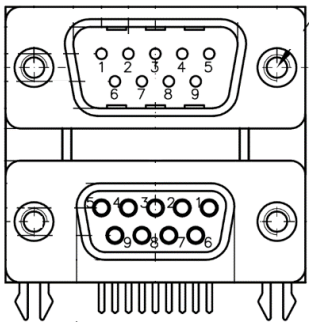

Front View

9.2. ADDRESSING

The power shelf and the power modules are individually addressable. The individual addresses are configured via DIP Switch (S1201) according to the table below.

DIP Switch			Address			
POSITION 1	POSITION 2	POSITION 3	PSU1	PSU2	PSU6	Backplane
OFF	OFF	OFF	0x01	0x02	0x06	0x0E
OFF	OFF	ON	0x11	0x12	0x16	0x1E
OFF	ON	OFF	0x21	0x22	0x26	0x2E
OFF	ON	ON	0x31	0x32	0x36	0x3E
ON	OFF	OFF	0x41	0x42	0x46	0x4E
ON	OFF	ON	0x51	0x52	0x56	0x5E
ON	ON	OFF	0x61	0x62	0x66	0x6E
ON	ON	ON	0x71	0x72	0x76	0x7E

DIP Switch Setting (S1)

9.3. NETWORK ATTACHED CONTROLLER (OPTIONAL)

The Network Attached Controller is a shelf level controller providing monitoring and control functions through a 10/100 MB base Ethernet port. It is hot-pluggable and supplied via the 12 V standby output of the power modules. The controller can be configured through a web interface; the monitoring and control functions are accessed through SNMP. See BCA.00318 for Network Attached Controller Documentation.

10. PARALLEL OPERATION

Up to 8 SPSTET4-0x power-shelves can be configured for parallel operation.
For parallel operation:

- Connect the following:
  - V1 Main Output
  - VSB Standby Output
  - CANBus
- NAC
  - Per power-zone, install only 1 NAC.
  - If a NAC is used, then install it either on the top-shelf or the bottom-shelf.
  - If a NAC is installed, a CAN Terminator on that shelf is not required. The NAC has termination assembled internally.
- CANBus connection and termination
  - Use CANBus Cables (see Accessories) to connect the CAN ports between shelves.
  - Connect a CAN Terminator (see Accessories) to the top-shelf and bottom-shelf. If a NAC is installed, a CAN Terminator on that shelf is not required.
- Set the power-shelf address via the DIP Switches

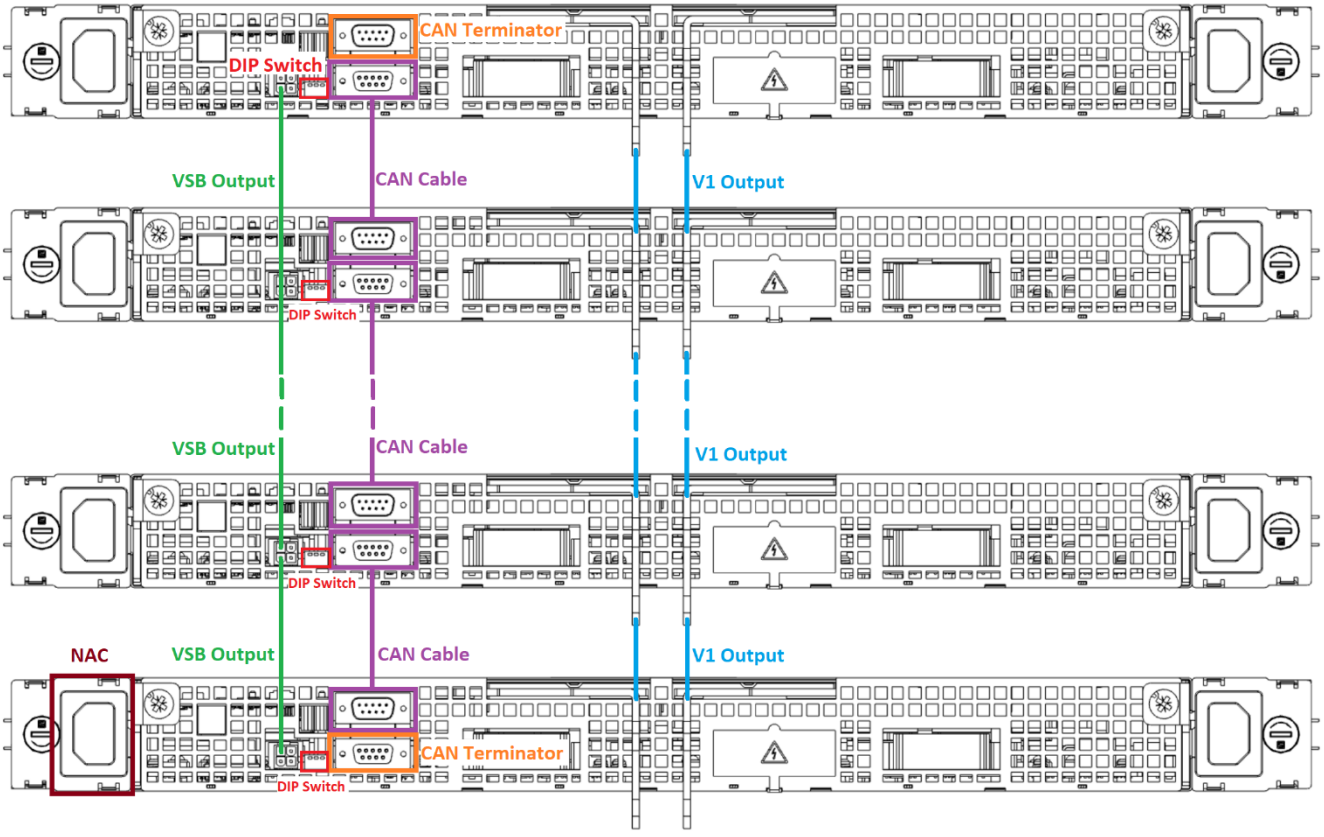

Figure 2. Parallel Operation

© 2020 Bel Power Solutions & Protection

11. LEDs

11.1 POWER MODULE LEDS (FRONTSIDE)

Each power module has 2 LEDs to indicate status condition. LED number one is green and indicates AC power is on or off, while LED number two is bi-colored: green and yellow to indicate DC power presence or fault conditions.

OPERATING CONDITION	LED SIGNALING
AC LED	
AC Line within range	Solid Green
AC Line out of range	Off
DC LED[5]	
V_1 or V_{SB} out of regulation Over temperature shutdown Output over voltage shutdown (V_1 or V_{SB}) Output under voltage shutdown (V_1 or V_{SB}) Output over current shutdown (V_1 or V_{SB})	Solid Yellow
Invalid CANBus Node-Id	Blinking Yellow
Main output V1 is turned off	Blinking Green
Normal Operation	Solid Green
Power module is back supplied and AC Line out of range	Blinking Yellow
Otherwise	Off

11.2 POWE SHELF LEDS (BACKSIDE)

LED	FUNCTION	DESCRIPTION
LED 1	INOK_L	On if INOK_L is low. See "Logic Signals"
LED 2	PSON_SHELF_L	On if PSON_SHELF_L is low. See "Logic Signals"
LED 3	-	Reserved
LED 4	WATCHDOG	Blink 1 Hz if the Shelf Controller is alive.

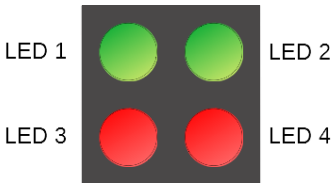

11.3 +12VSB CONNECTOR (J1204)

PIN OUTS (J1204)	FUNCTION	DESCRIPTION
1, 3	VSB_GND	+12VSB return
2, 4	VSB	+12VSB output

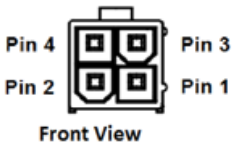

12. AUXILIARY AC OUTLET

The 3 connectors (J1202, J1206, and J1207) are used to provide AC power to the Network Switch Devices. Each connector is connected to one of the LIVE terminals (L1, L2, and L3) and NEUTRAL from the 3-phase input (J1108). These are protected by a 10 A / 500 VAC Time Lag fuse on the LIVE terminal (F1201) and 15 A / 500 VAC Fast-Acting fuse on the LIVE terminal (F1206, and F1207). See Safety Warning when servicing the fuse.

When a power shelf is operated at ambient temp of +45 °C to +55 °C, the output load current must be derated to 75%.

[5] The order of the criteria in the table corresponds to the testing precedence in the controller. LEDs are only available if sufficient input voltage is applied for operation of the internal supply circuits.

13. SAFETY, REGULATORY AND EMC SPECIFICATIONS

PARAMETER	DESCRIPTION / CONDITION	CRITERION
Agency Approvals	Approved to the latest revisions/amendments of the following standards: UL/CSA62368-1, EN62368-1 and IEC62368-1	Approved
Insulation	Input (L/N) to case (PE) Input (L/N) to output Output to case (PE)	Basic Reinforced Functional
Creepage / Clearance (d_C)	Primary (L/N) to protective earth (PE) Primary to secondary	Min. 2.5 / 2.0 mm Min. 5.0 / 4.0 mm
Electrical Strength Test	Input to case Input to output (tested by manufacturer only)	Min. 2000 VDC Min. 4000 VDC
Conducted Emission	EN55022 / CISPR 22: 0.15 … 30 MHz, QP and AVG	Class A
Radiated Emission	EN55022 / CISPR 22: 30 MHz … 1 GHz, QP	Class A
Harmonic Emissions (per module)	IEC61000-3-2, Vin = 230 VAC, 50 Hz, 100% Load (per module)	Class A
AC Flicker	IEC / EN 61000-3-3, d_{max} < 3.3%	PASS
ESD Contact Discharge	IEC / EN 61000-4-2, ±8 kV, 25+25 discharges per test point (metallic case, LEDs, connector body)	A
ESD Air Discharge	IEC / EN 61000-4-2, ±15 kV, 25+25 discharges per test point (non-metallic user accessible surfaces)	A
Radiated Electromagnetic Field	IEC / EN 61000-4-3, 10 V/m, 1 kHz/80% Amplitude Modulation, 1 µs Pulse Modulation, 10 kHz…2 GHz	A
Burst	IEC / EN 61000-4-4, level 3 AC port ±2 kV, 1 minute DC port ±1 kV, 1 minute	A
Surge	IEC / EN 61000-4-5 Line to earth: level 3, ±2 kV Line to line: level 2, ±1 kV	A
RF Conducted Immunity	IEC/EN 61000-4-6, Level 3, 10 Vrms, CW, 0.1 … 80 MHz	A
Voltage Dips and Interruptions (per module)	IEC/EN 61000-4-11 (per module) 1: Vi 230 VAC, 100% Load, Dip 100%, Duration 12 ms 2: Vi 230 VAC, 100% Load, Dip 100%, Duration < 150 ms 3. Vi 230 VAC, 100% Load, Dip 100%, Duration > 150 ms	 A V1: B, VSB: A B

14. ENVIRONMENTAL SPECIFICATIONS

PARAMETER	DESCRIPTION / CONDITION	MIN	NOM	MAX	UNIT
Operating Temperature	@ full load, up to 4000 m: @ full load, up to 1800 m: @ 75% load, up to 1800 m:	0 0 0		+35 +45 +55	°C
Non-Operating Temperature		-40		+70	°C
Humidity	Operating: @ at 40 °C, non-condensing Non-Operating: non-condensing	7 5		93 95	%RH
Altitude	Operating: Non-Operating:			4000 13000	m
Shock	Operating: 11 ms half-sine shocks in Z axis 10+ve, 10-ve Non-Operating: 11 ms half-sine shocks in Z axis 10+ve, 10-ve		5 30		g
Vibration	Operating: 0.2 g_{rms} random Non-Operating: 1 g_{rms} random	5 2		500 200	Hz
Cooling	When equipped with operating PSUs			50	Pa

© 2020 Bel Power Solutions & Protection

15. CONNECTORS

DESCRIPTION	REFERENCE DESIGNATOR	TYPE	MANUFACTURER	MPN
Input Connector	J1107, J1108	3-phase input	Positronic Industries	SP5YYE48M0LN9A1/AA-PA1067
Logic Signal Connector	J3202	4P4C Modular Jack	Bel Fuse Inc.	SS-6444-NF
+12VSB output connector	J1204		Molex	39-30-0040
CAN Connector	J1201	Dual port D-SUB 9	Norcomp	189-009-413R571
Auxiliary AC Outlet	J1202	Single phase output	Molex	172043-0302
Auxiliary AC Outlet	J1206, J1207	Single phase output	Rong Feng	SS-130-PC-NEW (C13)
Auxiliary AC Outlet Fuse	F1201	5 x 20 mm Time Lag Fuse	Bel Fuse Inc. Eaton	0ADKC9100-BE BK1-S505H-10-R
Auxiliary AC Outlet Fuse	F1206, F1207	6.3 x 32 mm Fast-Acting Fuse	Bel Fuse Inc. Littelfuse Inc.	0ADEC9150-BE 0505015.MXP

15.1. CONNECTOR PIN ASSIGNMENT

3-Phase Input Connector (J1107, J1108)

MPN: SP5YYE48M0LN9A1/AA-PA1067
Mating Part: SP5YYE1F0091/AA with FC1210P2S/AA

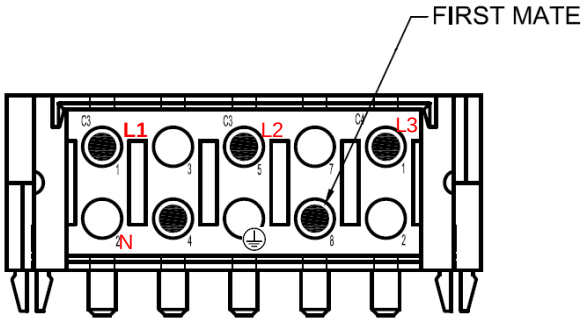

Figure 4. Front View

Auxiliary AC Outlet (J1102)

MPN: 172043-0302
Mating Part: 172672-2003

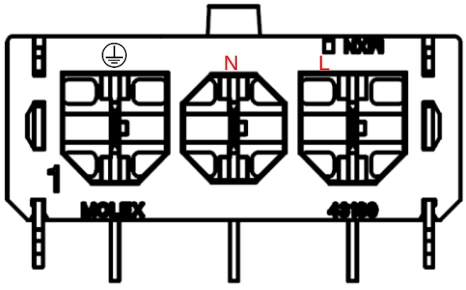

Figure 5. Front View

Auxiliary AC Outlet (J1206, J1207)

MPN: SS-130-PC-NEW (C13)

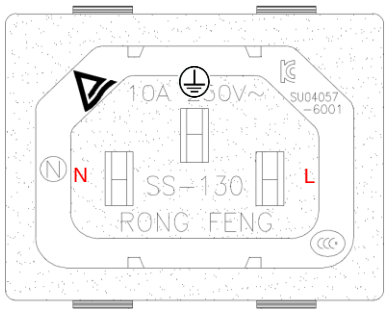

Figure 6. Front View

© 2020 Bel Power Solutions & Protection

16. MECHANICAL SPECIFICATIONS

PARAMETER	
Dimensions (W x H x D)	534.0 x 46.5 x 602 (overall: 534.5 x 47 x 718.6 mm) for SPSTET4-11 534.5 x 46.5 x 602 (overall: 436.5 x 47 x 858.8 mm) for SPSTET4-12, -13, -14
Weight (Shelf only)	9 kg
Weight (6 PSU installed)	25 kg

16.1. SPSTET4-11 MECHANICAL DATA

NOTE: Finished good may look different from images.

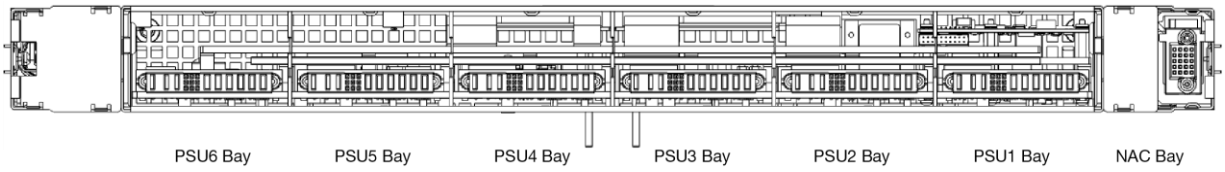

Figure 7. SPSTET4-11 Front View

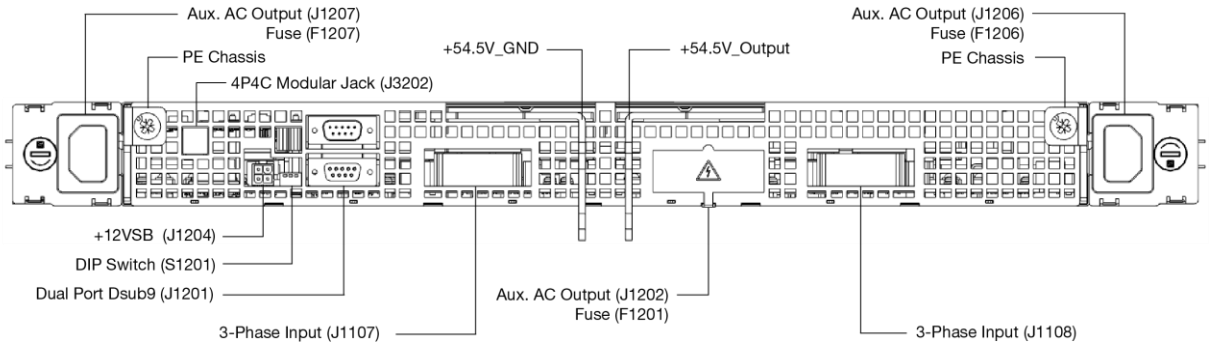

Figure 8. SPSTET4-11 Rear View

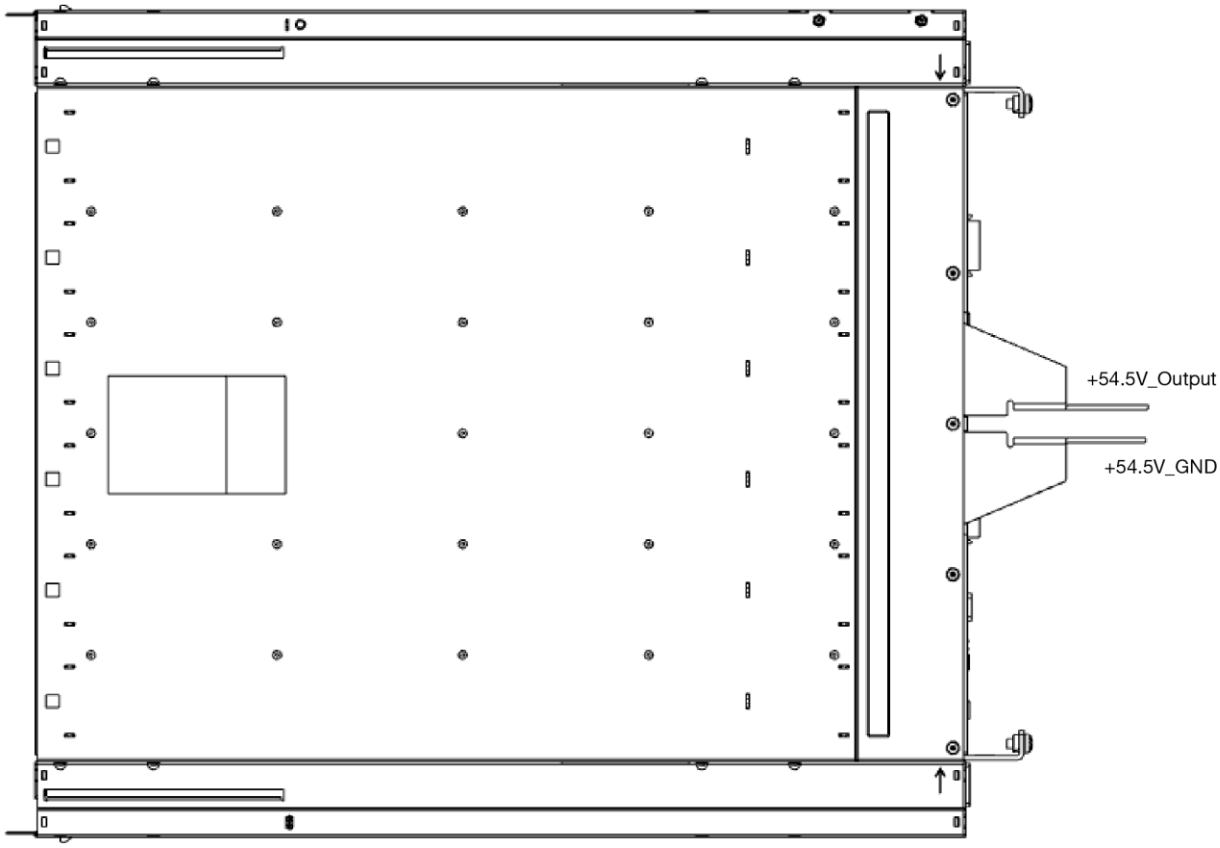

Figure 9. SPSTET4-11 Top View

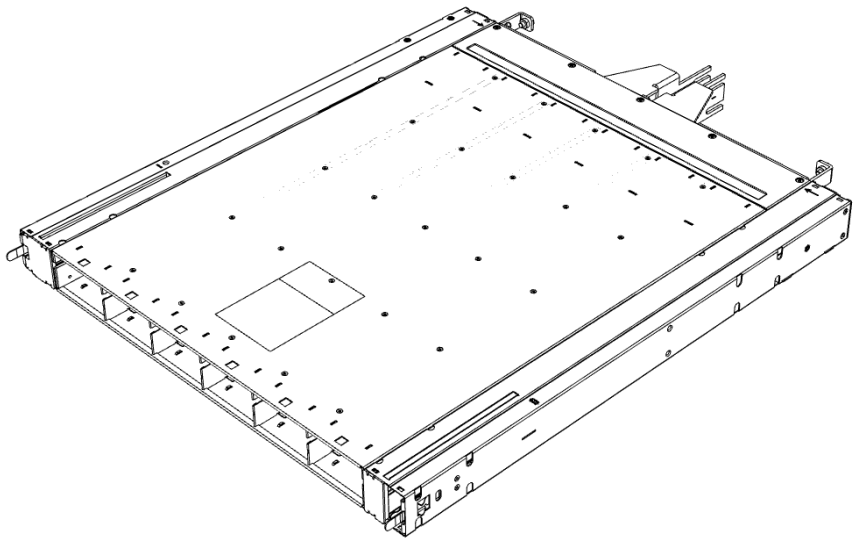

Figure 10. SPSTET4-11 Isometric View

© 2020 Bel Power Solutions & Protection

16.2. SPSTET4-12 MECHANICAL DATA

NOTE: Finished good may look different from images.

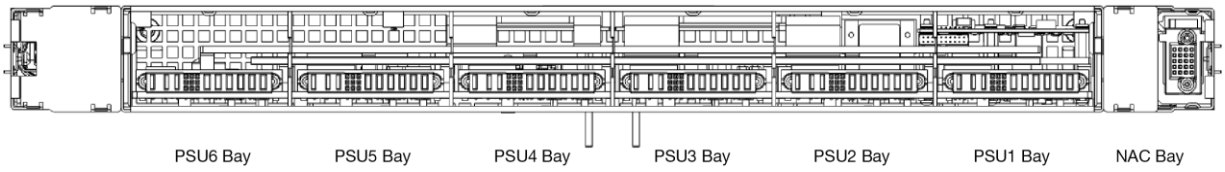

Figure 11. SPSTET4-12 Front View

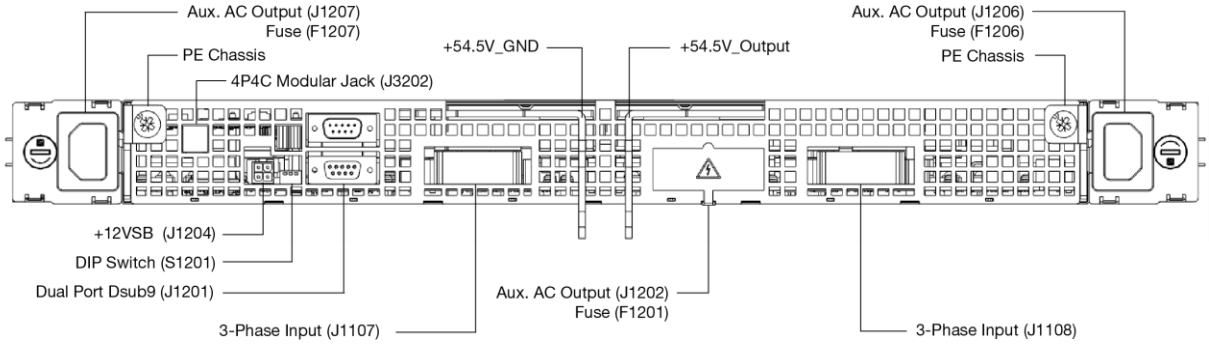

Figure 12. SPSTET4-12 Rear View

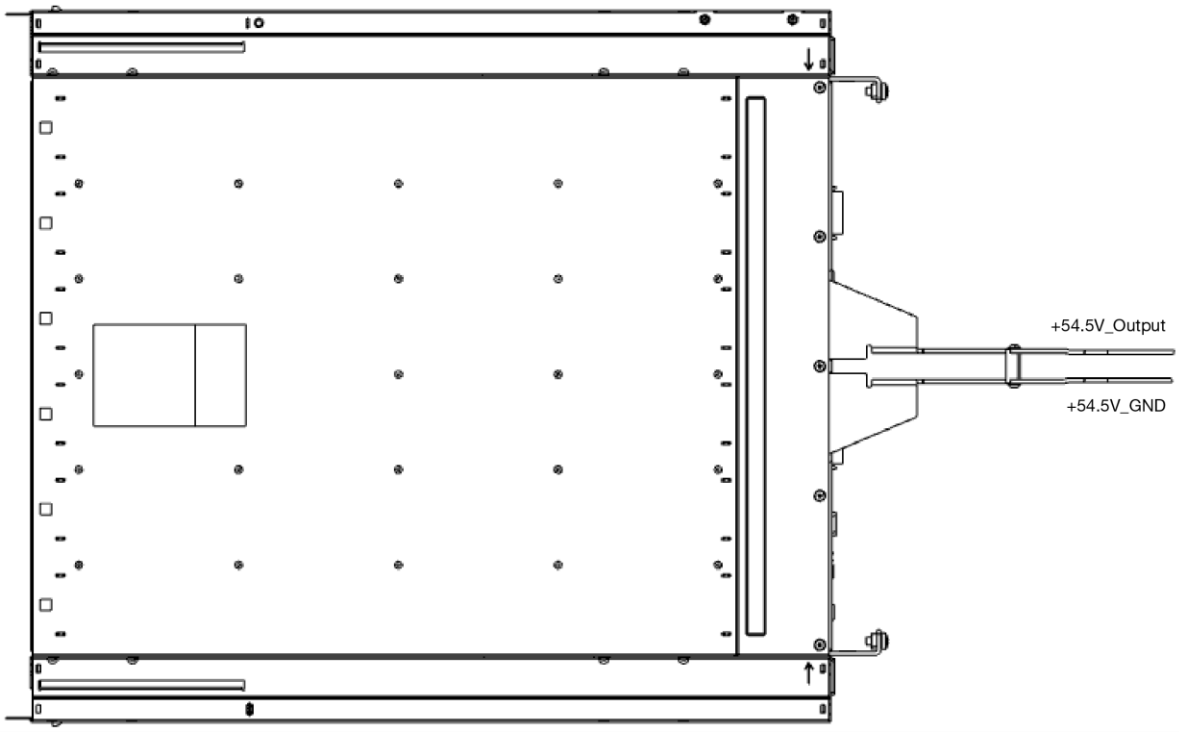

Figure 13. SPSTET4-12 Top View

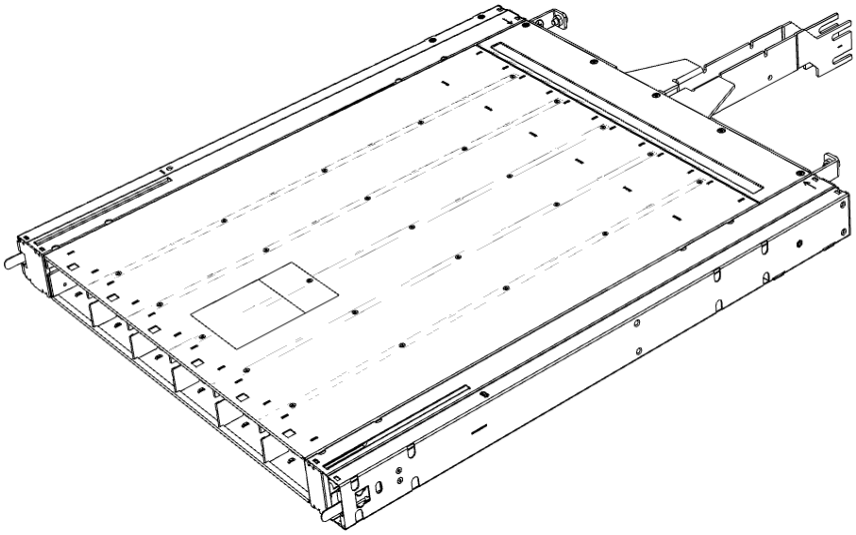

Figure 14. SPSTET4-12 Isometric View

16.3. SPSTET4-13 MECHANICAL DATA

NOTE: Finished good may look different from images.

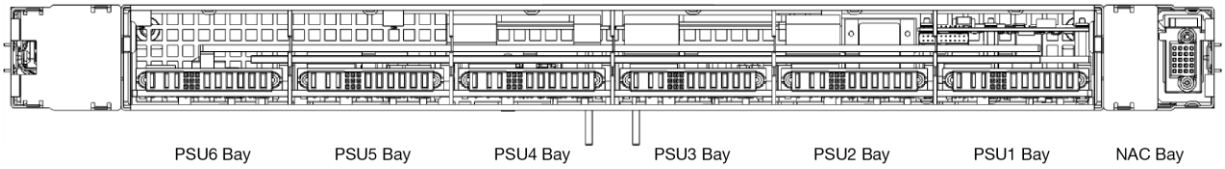

Figure 15. SPSTET4-13 Front View

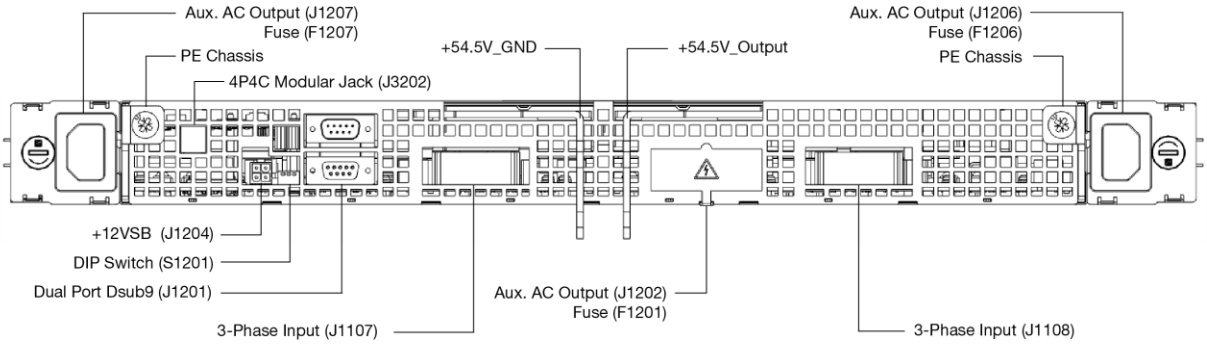

Figure 16. SPSTET4-13 Rear View

© 2020 Bel Power Solutions & Protection

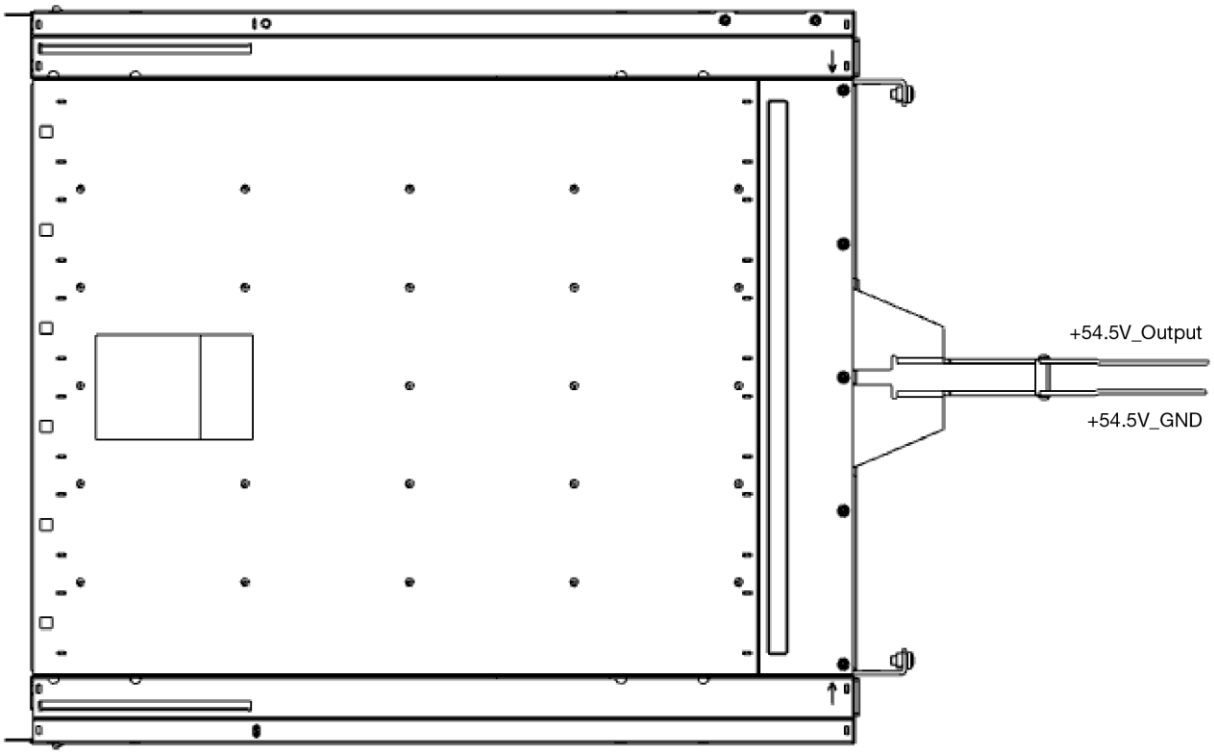

Figure 17. SPSTET4-13 Top View

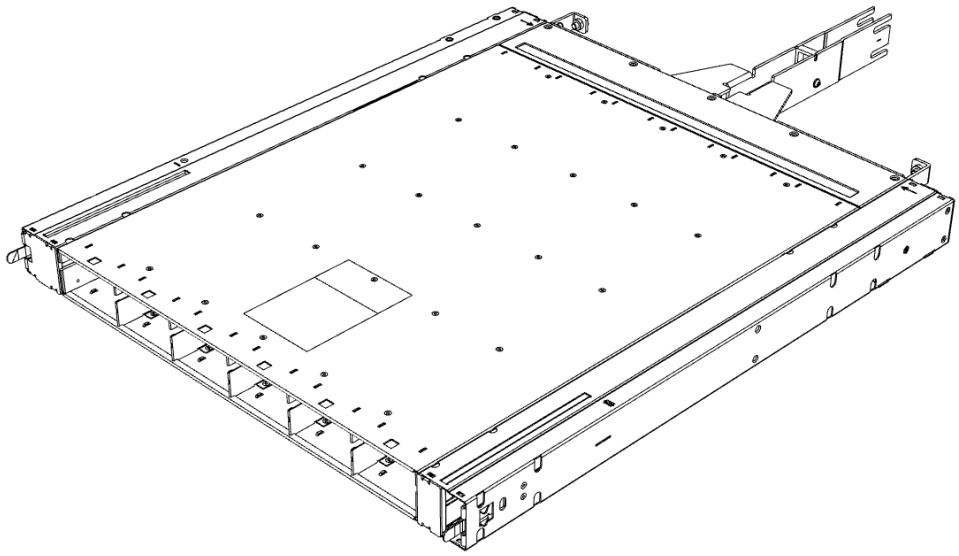

Figure 18. SPSTET4-13 Isometric View

16.4. SPSTET4-14 MECHANICAL DATA

NOTE: Finished good may look different from images.

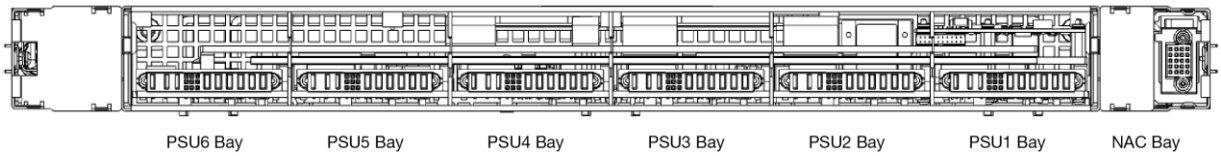

Figure 19. SPSTET4-14 Front View

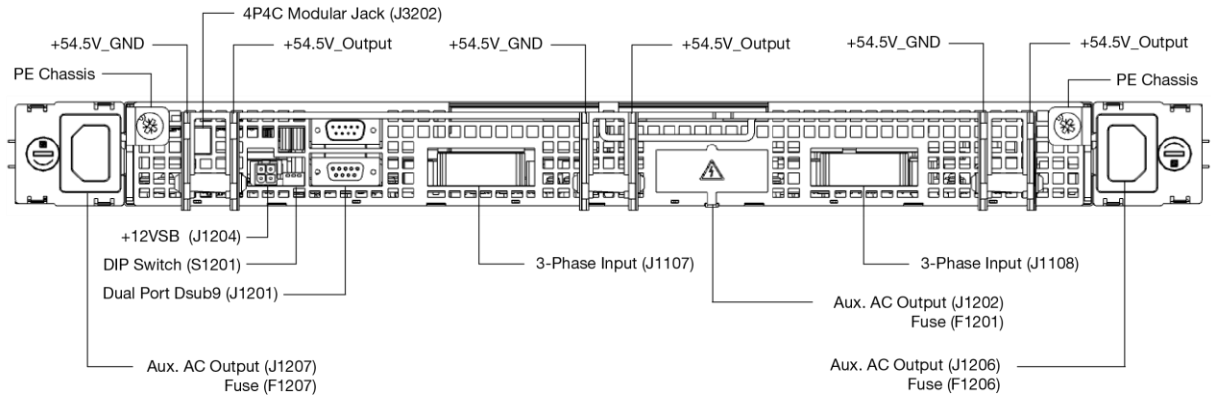

Figure 20. SPSTET4-14 Rear View

© 2020 Bel Power Solutions & Protection

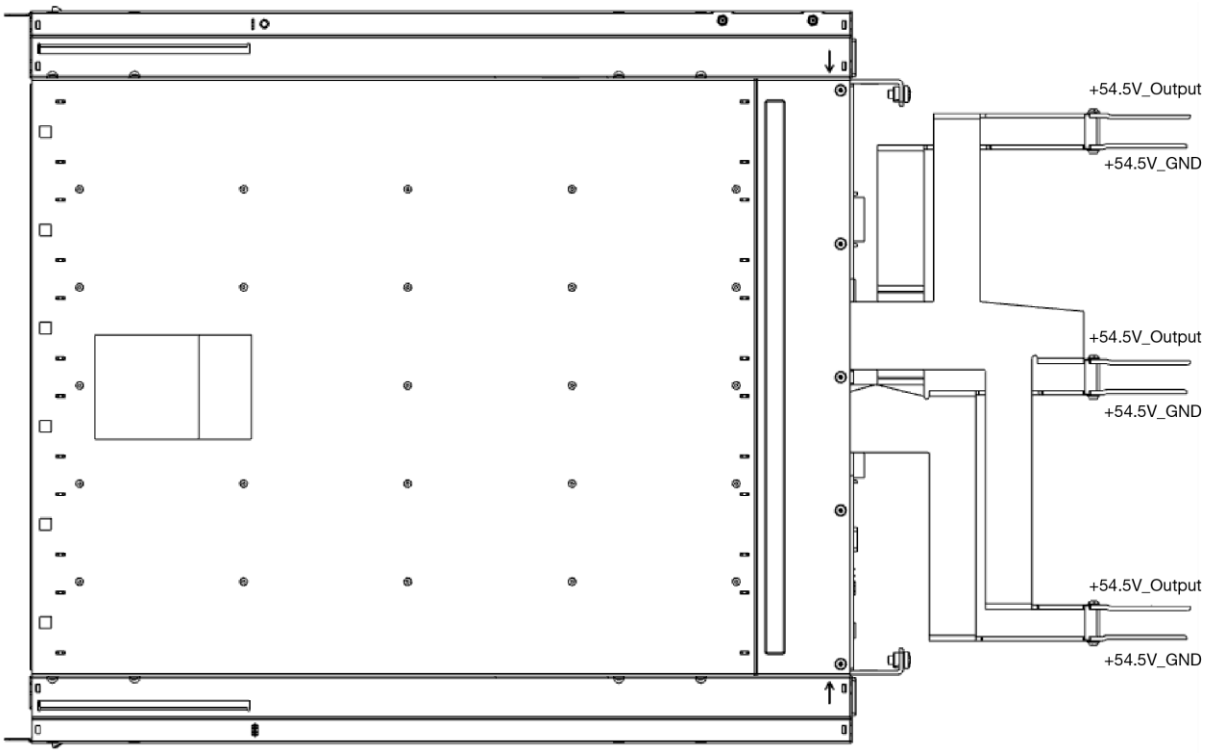

Figure 21. SPSTET4-14 Top View

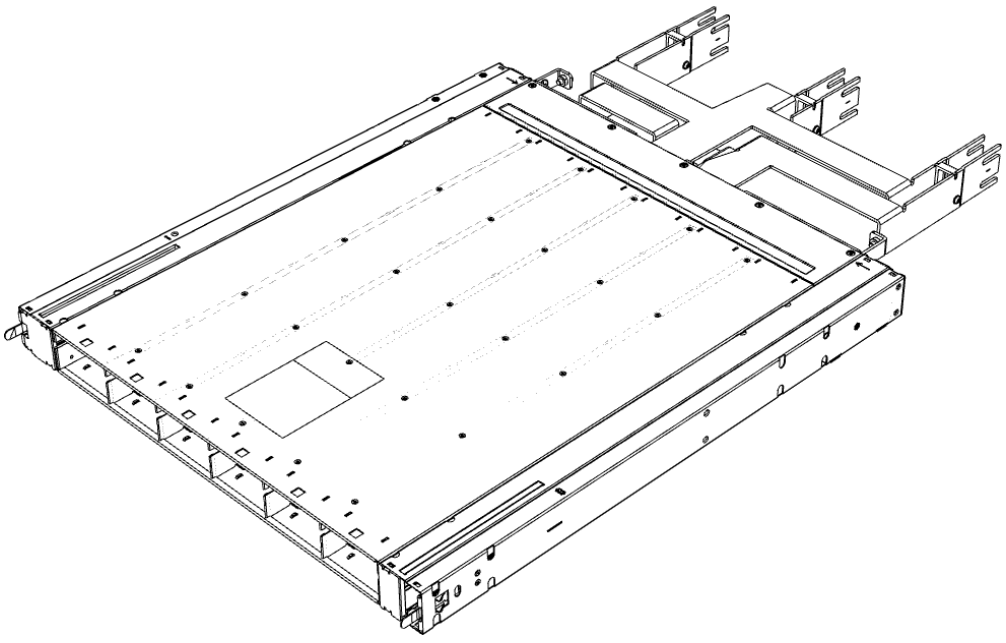

Figure 22. SPSTET4-14 Isometric View

17. ACCESSORIES

ITEM	DESCRIPTION	ORDERING PN
Network Attached Controller	The Network Attached Controller provides easy access to monitoring and control functions through SNMP.	NAC1026-02 NAC3006-01 (available 2021)
Blanking Panel	Power Rack Blanking Panel	SPSPFE3-BP01G
AC Auxiliary Power cord	Power cord for AC Auxiliary outlet from IEC C14 to IEC C13	ZLH.01201.0
AC Auxiliary Power cord	Power cord for AC Auxiliary outlet from Molex 172672-2003 to IEC C13	ZLH.01202.0
CANBus Terminator (female)	D-SUB 9; Pinout the same as J1201; 120 Ohm resistor between CAN_H and CAN_L	ZES.20036
CANBus Terminator (male)	D-SUB 9; Pinout the same as J1201; 120 Ohm resistor between CAN_H and CAN_L	ZES.20037
CANBus Cable	D-SUB 9; Pinout the same as J1201; Cable length = 110 mm	ZLH.20020

18. REVISION HISTORY

REV	DESCRIPTION	DATE	AUTHOR
1	Initial Release	07-02-2020	CM/GS
2	Adding PN SPSTET4-08 into the datasheet, datasheet renamed	08-13-2020	VS
3	Block diagram update, Parallel operation schematics replaced, Multiple wording clarifications throughout the datasheet added	11-16-2020	EE

For more information on these products consult: tech.support@psbel.com

NUCLEAR AND MEDICAL APPLICATIONS - Products are not designed or intended for use as critical components in life support systems, equipment used in hazardous environments, or nuclear control systems.
TECHNICAL REVISIONS - The appearance of products, including safety agency certifications pictured on labels, may change depending on the date manufactured. Specifications are subject to change without notice.

bel POWER SOLUTIONS & PROTECTION
a bel group

Asia-Pacific +86 755 298 85888
Europe, Middle East +353 61 225 977
North America +1 408 785 5200

© 2020 Bel Power Solutions & Protection