TFS1500-12-054xD Series

DC-DC Front End Power Supply

The TFS1500-12-054xD series is a 1500 Watt DC to DC power supply that converts DC input into a main output of 12 VDC for powering intermediate bus architectures (IBA) in high performance and reliability servers, routers, and network switches.

This power supply meets international safety standards and displays the CE-Mark for the European Low Voltage Directive (LVD).

KEY FEATURES

- High Efficiency, typ. 95.3% efficiency at half load
- Wide input voltage range: -40 to -72 VDC
- PS_KILL Control the standby output
- Programmable 3.3V / 5V / 12VSB
- Hot-plug capable
- Parallel operation with active current sharing
- High density design: 50 W/in^3
- Small form factor: 228.6(L) x 54.5(W) x 40(H) mm
- I2C communication interface for control, programming and monitoring with Power Management Bus protocol
- Over temperature, output over voltage and overcurrent protection
- Status LED with fault signaling
- Blackbox recorder available

APPLICATIONS

- Networking Switches
- Servers & Routers
- Telecommunications

Please read our datasheet & drawing disclaimer here.

1. ORDERING INFORMATION

TFS	1500	-	12	-	054	x	D	x
Product Family	Power Level	Dash	V1 Output	Dash	Width	Airflow [1]	Input	Specific code [2]
TFS Front ends	1500 W	-	12 V	-	54.5 mm	N: Normal R: Reverse	D: DC Input	x = S+3 digits

[1] N = Normal Airflow from Output connector to Input socket

R = Reverse Airflow from Input socket to Output connector

[2] Contact factory for availability of specific code

2. OVERVIEW

The TFS1500-12-054xD series DC/DC power supply is a DSP controlled, highly efficient front-end power supply. It incorporates state of the art technology and uses an interleaved forward converter topology with active clamp and synchronous rectification to reduce component stresses, thus providing increased system reliability and very high efficiency. With a wide input DC voltage range the TFS1500 Series maximizes power availability in demanding server, network, and other high availability applications. The supply is fan cooled and ideally suited for integration with a matching airflow path.

An active OR-ing device on the output ensures no reverse load current and renders the supply ideally suited for operation in redundant power systems.

The always-on standby output provides power to external power distribution and management controllers. It is protected with an active OR-ing device for maximum reliability.

Status information is provided with front-panel LEDs. In addition, the power supply can be controlled and the fan speed set via the I2C bus. The I2C bus allows full monitoring of the supply, including input and output voltage, current, power, and inside temperatures. Cooling is managed by a fan controlled by the DSP controller. The fan speed is adjusted automatically depending on the actual power demand and supply temperature and can be overridden through the I2C bus.

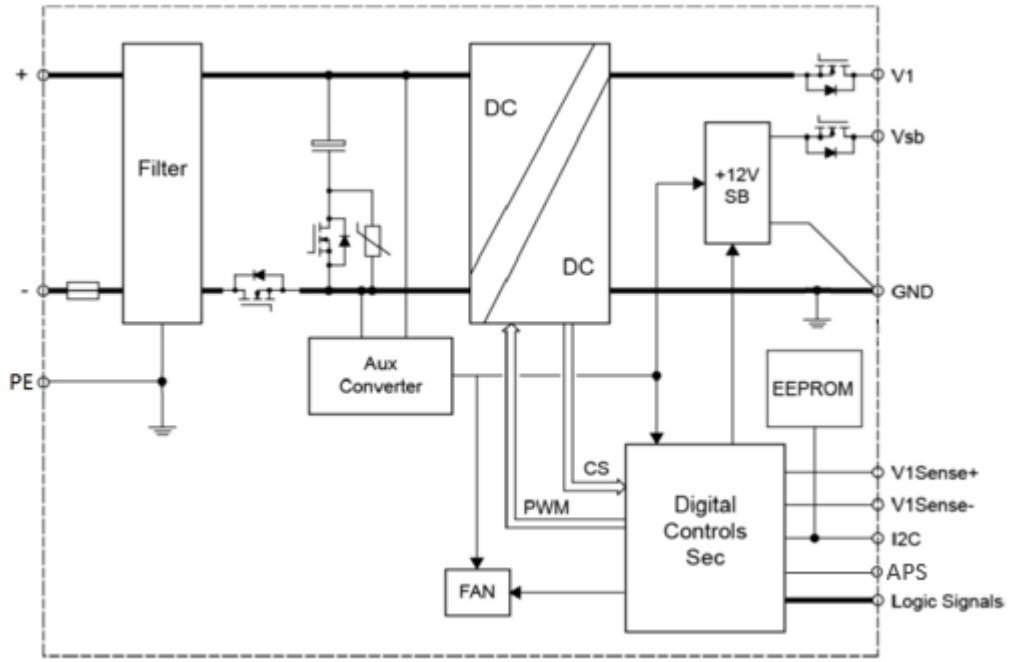

Figure 1. Block Diagram

3. ABSOLUTE MAXIMUM RATINGS

Stresses in excess of the absolute maximum ratings may cause performance degradation, adversely affect long-term reliability, and cause permanent damage to the supply.

PARAMETER		DESCRIPTION / CONDITION	MIN	NOM	MAX	UNIT
Vi *maxc*	Maximum Input Voltage	Continuous			-75	VDC

4. INPUT SPECIFICATIONS

General Condition: T_A = -5… 55°C unless otherwise specified.

PARAMETER		CONDITIONS / DESCRIPTION	MIN	NOM	MAX	UNIT
$V_{i\,nom}$	Nominal input voltage		-48		-60	VDC
V_i	Input voltage ranges	Normal operating ($V_{i\,min}$ to $V_{i\,max}$)	-40		-72	VDC
$I_{i\,max}$	Max input current	Vi > Vi min			45	A_{rms}
$I_{i\,p}$	Inrush Current Limitation	$V_{i\,min}$ to $V_{i\,max}$, T_A = 25°C, cold start			50	A_p
Vi_{VSB_on}	Turn-on standby input voltage	Ramping up	-30		-32	VDC
Vi_{VSB_off}	Turn-off standby input voltage	Ramping down	-28		-30	VDC
Vi_{V1_on}	Turn-on V1 input voltage	Ramping up	-38		-40	VDC
Vi_{V1_off}	Turn-off V1 input voltage	Ramping down	-37		-39	VDC
η	Efficiency	Vi = -48 VDC; -60 VDC; 20% load, Ta = 25°C Vi = -48 VDC; -60 VDC; 50% load, Ta = 25°C Vi = -48 VDC; -60 VDC; 100% load, Ta = 25°C	90 94 91	92 95.3 93		%

4.1 INPUT FUSE

60 A (or equivalent) input fuse in the negative voltage path inside the power supply protect against severe defects.
The fuses are not accessible from the outside and are therefore not serviceable parts.

4.2 INRUSH CURRENT

Internal bulk capacitors will be charged through resistors connected from bulk cap minus pin to the DC rail minus, thus limiting the inrush current. After the inrush phase, NTC resistors are then shorted with MOSFETs connected in parallel. The Inrush control is managed by the digital controller (DSP).

4.3 INPUT UNDER-VOLTAGE

If the input voltage stays below the input under voltage lockout threshold Vi on, the supply will be inhibited. Once the input voltage returns within the normal operating range, the supply will return to normal operation again.

© 2025 Bel Fuse Inc. BCD.20326_A 16 Jul 2025

4.4 EFFICIENCY

The topologies minimizing switching losses and a full digital control scheme. Synchronous rectifiers on the output reduce the losses in the high current output path. The speed of the fan is digitally controlled to keep all components at an optimal operating temperature regardless of the ambient temperature and load conditions.

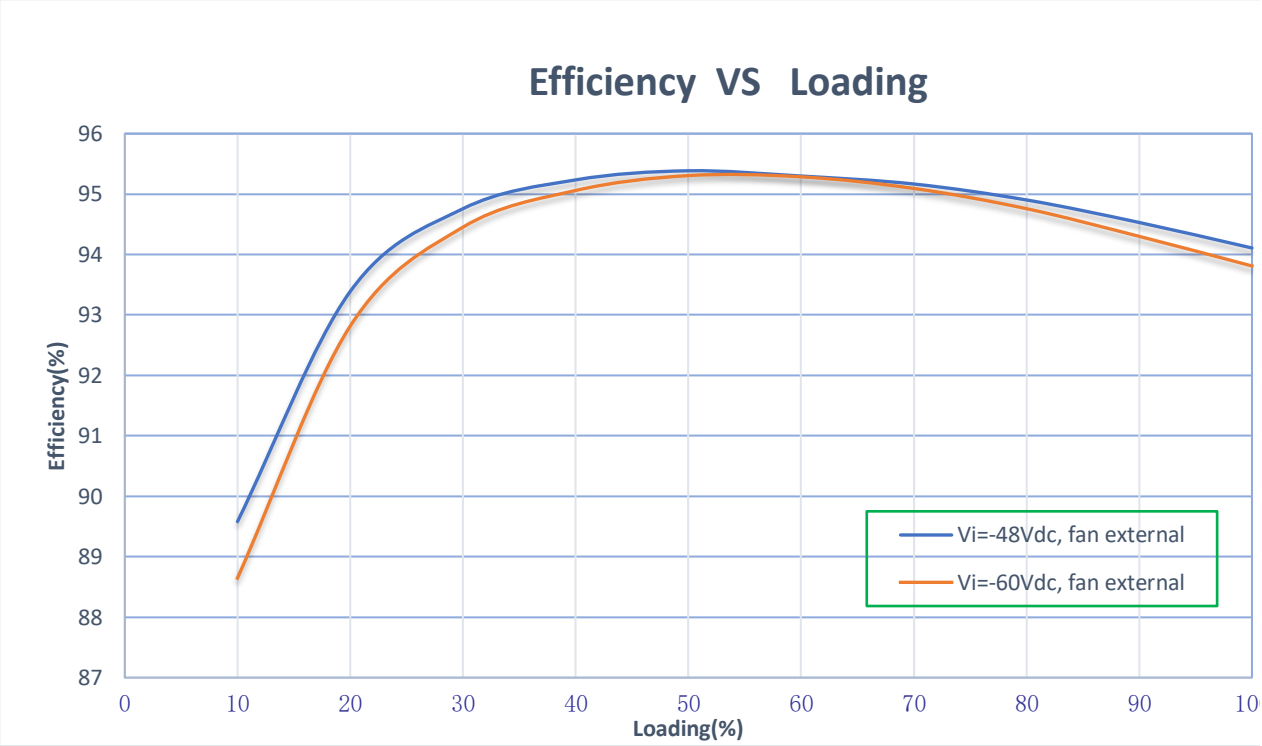

Figure 2. Efficiency Vs Loading

4.5 DC LINE TRANSIENT TEST

MINUS 72 VDC LINE TRANSIENT TEST

A standard line voltage momentary transient test is shown below. This test simulates a momentary voltage overshoot. This should not affect the operation of the PSU; the output voltage should remain in regulation. This test shall be conducted every 10 sec for 30 min (180 times total).

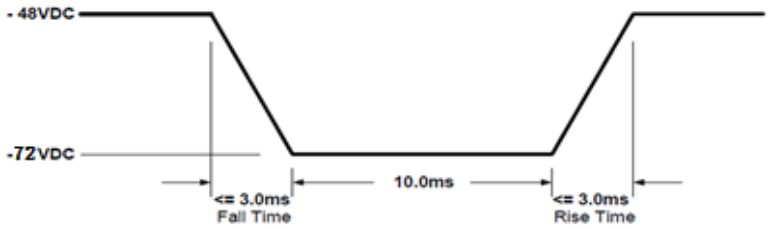

Figure 3. Minus 72 VDC Line Transient Test

0 V LINE TRANSIENT TEST

A standard line voltage momentary blackout test is shown below. This test simulates a momentary switch throw off-on, see graph below. The power supply should restart, not latch. This test shall be conducted 3 times in 10 min intervals.
Practically a blackout of any duration should not damage the power supply in any way and not cause a latch off condition.

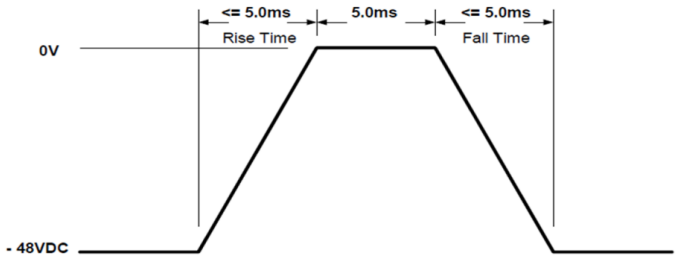

Figure 4. 0 V Line Transient Test

5. OUTPUT SPECIFICATIONS

General Condition: T_A = -5… 55°C unless otherwise specified.

PARAMETER		CONDITIONS / DESCRIPTION	MIN	NOM	MAX	UNIT
Main Output V_1						
$V_{1\ nom}$	Nominal Output Voltage	0.5 · $I_{1\ nom}$, T_{amb} = 25 °C		12.0		VDC
$V_{1\ set}$	Output Setpoint Accuracy		-0.5		+0.5	% $V_{1\ nom}$
d $V_{1\ tot}$	Total Regulation	$V_{1\ min}$ to $V_{1\ max}$, 0 to 100% $I_{1\ nom}$, $T_{a\ min}$ to $T_{a\ max}$	-5		+5	% $V_{1\ nom}$
$P_{1\ nom}$	Nominal Output Power	V_1 = 12 VDC		1500		W
$I_{1\ nom}$	Nominal Output Current	V_1 = 12 VDC		125		A
$V_{1\ pp}$	Output Ripple Voltage	$V_{1\ nom}$, $I_{1\ nom}$, 20 MHz BW, (See Section 5.1)			120[1]	mVpp
d $V_{1\ Load}$	Load Regulation	V_1 = $V_{1\ nom}$, 0 - 100 % $I_{1\ nom}$		80		mV
d $V_{1\ Line}$	Line Regulation	V_1 = $V_{1\ min}$... $V_{1\ max}$		40		mV
d I_{share}	Current Sharing	Current imbalance value between any two PSU > 20%	-3		+3	A
d V_{dyn}	Dynamic Load Regulation	ΔI_1 = 50% $I_{1\ nom}$, I_1 = 5 … 100% $I_{1\ nom}$, dI_1/dt = 0.5 A/µs, 2000 µF low ESR capacitive loading	-0.6		+0.6	V
T_{rec}	Recovery Time	Recovery within 1% of $V_{1\ nom}$		2		ms
$T_{DC\ V1}$	Start-Up Time From DC	V_1 = 10.8 VDC			3	sec
$t_{V1\ rise}$	Rise Time	V_1 = 10…90% $V_{1\ nom}$	1		30	ms
tV1 ovr sh	Output Turn-on Overshoot	*Vi nom*, 0 to 100% *I1 nom*			0.6	V
dV1 sense	Remote Sense	Compensation for cable drop, 0 to 100% *I1 nom*			0.25	V
C_{Load}	Capacitive Loading	T_a = 25 °C	1000		20000	µF

[1] If the input voltage is higher than 60V, the maximum ripple limit is 150mVpp

© 2025 Bel Fuse Inc. BCD.20326_A 16 Jul 2025

3.3 / 5 V_{SB} Standby Output							
$V_{SB\,nom}$	Nominal Output Voltage	0.5 · $I_{SB\,nom}$, T_{amb} = 25°C	VSB_SEL1 = 1, VSB_SEL2 = 1		3.3		VDC
$V_{SB\,set}$	Output Setpoint Accuracy		VSB_SEL1 = 0, VSB_SEL2 = 1		5.0		VDC
				-1		+1	% $V_{1\,nom}$
$dV_{SB\,tot}$	Total Regulation	$V_{i\,min}$ to $V_{i\,max}$, 0 to 100% $I_{SB\,nom}$, $T_{a\,min}$ to $T_{a\,max}$		-5		+5	% V_{SBnom}
$P_{SB\,nom}$	Nominal Output Power	V_{SB} = 3.3 VDC			16.5		W
		V_{SB} = 5.0 VDC			16.5		
$I_{SB\,nom}$	Nominal Output Current	V_{SB} = 3.3 VDC			5		A
		V_{SB} = 5.0 VDC			3.3		
$V_{SB\,pp}$	Output Ripple Voltage	$V_{SB\,nom}$, $I_{SB\,nom}$, 20 MHz BW, (See Section 5.1)				100	mVpp
dV_{SB}	Droop	0 - 100 % $I_{SB\,nom}$	VSB_SEL1 = 0 VSB_SEL2 = 1		67		mV
			VSB_SEL1 = 1 VSB_SEL2 = 1		44		
$I_{SB\,max}$	Current Limitation	VSB_SEL1 = 0, VSB_SEL2 = 1		5.25		6.5	A
		VSB_SEL1 = 1, VSB_SEL2 = 1		3.45		4.3	
dV_{SBdyn}	Dynamic Load Regulation	ΔI_{SB} = 50% $I_{SB\,nom}$, I_{SB} = 5 … 100% $I_{SB\,nom}$, dI_o/dt = 0.5A/µs, recovery within 1% of $V_{1\,nom}$		-5		5	% V_{SBnom}
T_{rec}	Recovery Time					250	µs
$T_{DC\,VSB}$	Start-up Time from DC	V_{SB} = 90% $V_{SB\,nom}$				2	sec
$t_{VSB\,rise}$	Rise Time	V_{SB} = 10…90% $V_{SB\,nom}$		0.5		20	ms
C_{Load}	Capacitive Loading	T_{amb} = 25°C		100		1500	µF

12 V_{SB} Standby Output							
$V_{SB\,nom}$	Nominal Output Voltage	0.5 · $I_{SB\,nom}$, T_{amb} = 25°C	VSB_SEL1 = 1		12		VDC
$V_{SB\,set}$	Output Setpoint Accuracy		VSB_SEL2 = 0	-1		+1	% $V_{1\,nom}$
$dV_{SB\,tot}$	Total Regulation	$V_{i\,min}$ to $V_{i\,max}$, 0 to 100% $I_{SB\,nom}$, $T_{a\,min}$ to $T_{a\,max}$		-5		+5	% V_{SBnom}
$P_{SB\,nom}$	Nominal Output Power				24		W
$I_{SB\,nom}$	Nominal Output Current				2		A
$V_{SB\,pp}$	Output Ripple Voltage	$V_{SB\,nom}$, $I_{SB\,nom}$, 20 MHz BW, (See Section 5.1)				120	mVpp
dV_{SBdyn}	Dynamic Load Regulation	ΔI_{SB} = 50% $I_{SB\,nom}$, I_{SB} = 5 … 100% $I_{SB\,nom}$, dI_o/dt = 0.5 A/µs, recovery within 1% of $V_{1\,nom}$		-0.6		+0.6	V
T_{rec}	Recovery Time				2		ms
$T_{DC\,VSB}$	Start-Up Time from DC Input	V_{SB} = 90% $V_{SB\,nom}$				2	sec
$t_{VSB\,rise}$	Rise Time	V_{SB} = 10…90% $V_{SB\,nom}$				20	ms
C_{Load}	Capacitive Loading	T_{amb} = 25 °C		100		1500	µF

5.1 RIPPLE / NOISE

The test set-up shall be following Figure 5.

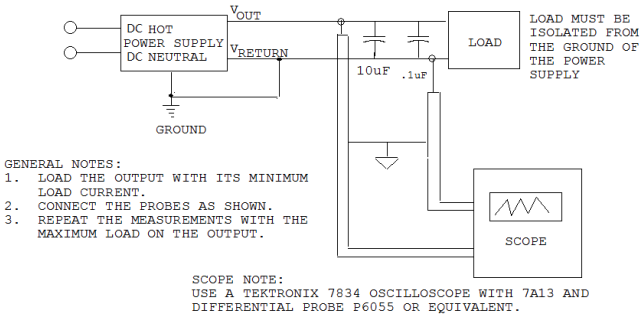

Figure 5. Output ripple test setup

NOTES: Load must be isolated from the safety ground to *Figure 5*
When performing this test, the probe clips and capacitors should be located close to the load.

6. PROTECTION SPECIFICATIONS

General Condition: T_A = -5… 55°C unless otherwise specified.

PARAMETER		DESCRIPTION / CONDITION		MIN	NOM	MAX	UNIT
F	Input Fuse	Not user accessible			60		A
$V_{1\ OV}$	OV Threshold V_1	Over Voltage V_1 Protection, Latch-off Type		13.3		14.5	VDC
$V_{SB\ OV}$	OV Threshold V_{SB}	Over Voltage V_{sb} Protection, Automatic recovery Type		110		120	% V_{SB}
$I_{V1\ lim}$	Over Current Limitation V_1	Over Current Limitation, five "hiccup" auto recovery cycles, followed by a latched shutdown		135		162.5	A
$I_{VSB\ lim}$	Over Current Limitation V_{SB}	Over Current Limitation, Automatic recovery Type	12 V_{SB}	2.2		2.8	A
			5.0 V_{SB}	3.45		4.3	
			3.3 V_{SB}	5.25		6.5	
T_{SD}	Over Temperature on Heat Sinks	Automatic shut-down			120		°C

6.1 OVERVOLTAGE PROTECTION

The TFS front-ends provide a fixed threshold overvoltage (OV) protection implemented with a HW comparator. Once an OV condition has been triggered, the supply will shut down and latch the fault condition. The latch can be unlocked by disconnecting the supply from the DC mains or by toggling the PSON_L input.

6.2 UNDERVOLTAGE DETECTION

Both main and standby outputs are monitored.

12 V_{SB}
LED and PWOK_L pin signal if the output voltage exceeds ±7% of its nominal voltage. Output under voltage protection is provided on both outputs. When either V1 or VSB falls below 93% of its nominal voltage, the output is inhibited.

3.3 / 5 V_{SB}
LED and PWOK_H pin signal if the output voltage exceeds ±5% of its nominal voltage. Output under voltage protection is provided on the standby output only. When VSB falls below 75% of its nominal voltage, the main output V1 is inhibited

© 2025 Bel Fuse Inc. BCD.20326_A 16 Jul 2025

6.3 CURRENT LIMITATION

6.3.1 MAIN OUTPUT

When main output runs in current limitation mode its output will turn OFF below 2V but will shut down after 5 attempts. If current limitation mode is still present after the unit retry, output will continuously perform this routine until current is below the current limitation point. The supply will go through soft start every time it retries from current limitation mode.

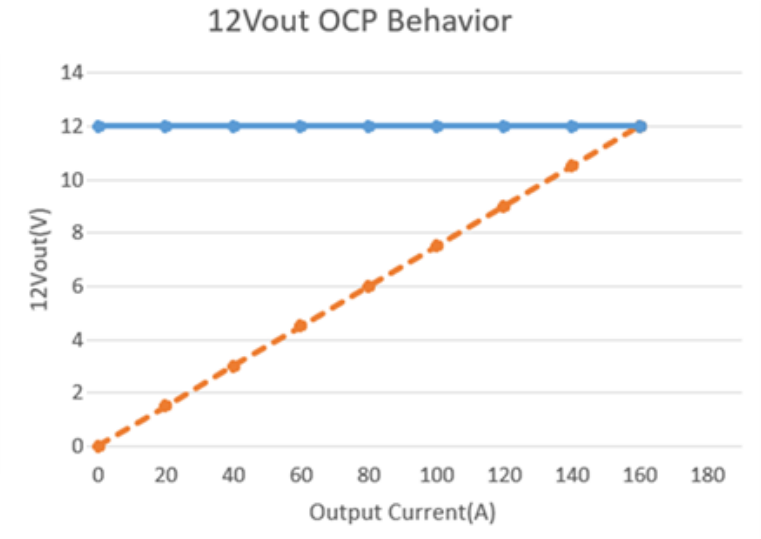

Figure 6. Current Limitation on V1

The main output current limitation will decrease if the ambient (inlet) temperature increases beyond 55°C

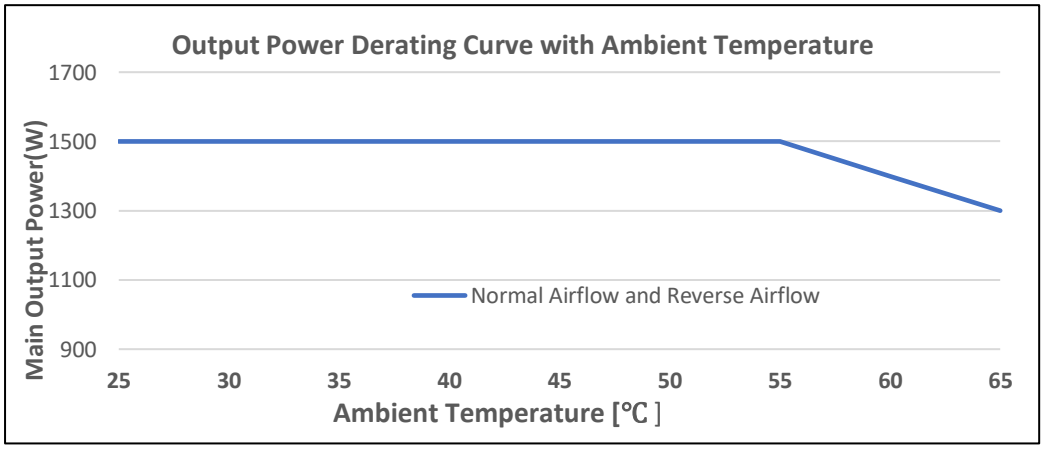

Figure 7. Derating Curve for ambient above 55°C

6.3.2 STANDBY OUTPUT

12V / 5V / 3.3V$_{SB}$

On the standby output, a hiccup type over current protection is implemented. This protection will shut down the standby output immediately when standby current reaches or exceeds $I_{VSB\ lim}$. After an off-time of 1s the output automatically tries to restart. If the overload condition is removed the output voltage will reach again its nominal value. At continuous overload condition the output will repeatedly trying to restart with 1s intervals. A failure on the Standby output will shut down both Main and Standby outputs.

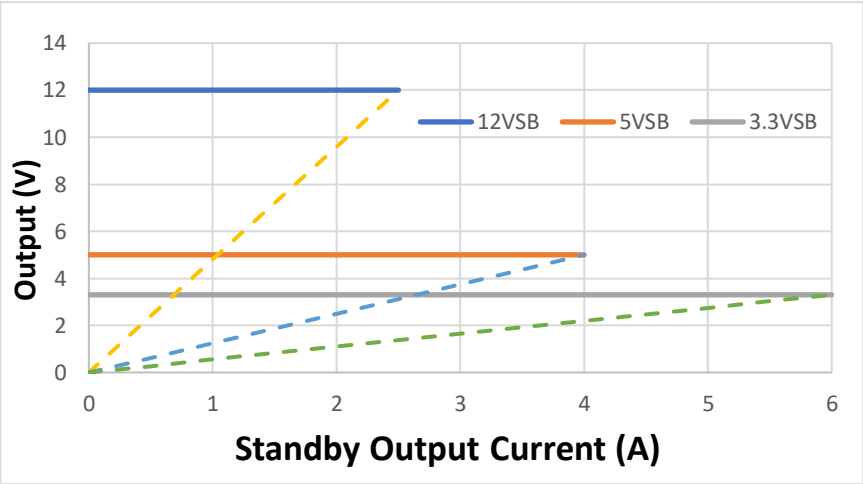

Figure 8. Current Limitation on Standby output

7. MONITORING

PARAMETER	DESCRIPTION / CONDITION		MIN	NOM	MAX	UNIT
$V_{I\ mon}$	Input Voltage	$V_{I\ min} \leq V_I \leq V_{I\ max}$	-2		+2	VDC
$I_{I\ mon}$	Input Current		-1		+1	A
$P_{I\ mon}$	True Input Power	I1 > 25 A I1 ≤ 25 A	-5 25		+5 25	% W
$V_{1\ mon}$	V_1 Voltage		-1		+1	%
$I_{1\ mon}$	V_1 Current	I1 > 25 A, T_{amb} = 25°C I1 ≤ 25 A, T_{amb} = 25°C	-3 -1		+3 +1	% A
$P_{o\ nom}$	Total Output Power	Po > 150 W Po ≤ 150 W	-5 -15		+5 +15	% W
$V_{SB\ mon}$	Standby Voltage		-0.5		+0.5	V
$I_{SB\ mon}$	Standby Current	$I_{SB} \leq I_{SB\ nom}$	-0.5		+0.5	A

© 2025 Bel Fuse Inc. BCD.20326_A 16 Jul 2025

8. SIGNAL & CONTROL SPECIFICATIONS

8.1 ELECTRICAL CHARACTERISTICS

PARAMETER	DESCRIPTION / CONDITION		MIN	NOM	MAX	UNIT
PSKILL_H / PSON_L / HOTSTANDBYEN_H Inputs						
V_{IL}	Input Low Level Voltage		-0.2		0.8	V
V_{IH}	Input High Level Voltage		2.4		3.5	V
$I_{IL, H}$	Maximum Input Sink or Source Current		0		1	mA
$R_{puPSKILL_H}$	Internal Pull Up Resistor on PSKILL_H			20		kΩ
R_{puPSON_L}	Internal Pull Up Resistor on PSON_L			10		kΩ
$R_{puHOTSTANDBYEN_H}$	Internal Pull Up Resistor on HOTSTANDBYEN_H			2		kΩ
R_{LOW}	Resistance Pin to SGND for Low Level		0		1	kΩ
R_{HIGH}	Resistance Pin to SGND for High Level		50			kΩ
PWOK_H Output						
V_{OL}	Output Low Level Voltage	I_{sink} < 4 mA	0		0.4	V
V_{OH}	Output High Level Voltage	I_{source} < 0.5 mA	2.6		3.5	V
R_{puPWOK_H}	Internal Pull Up Resistor on PWOK_H			1		kΩ
VINOK_H Output						
V_{OL}	Output Low Level Voltage	I_{sink} < 2 mA	0		0.4	V
V_{OH}	Output High Level Voltage	I_{source} < 50 µA	2.6		3.5	V
$R_{puVINOK_H}$	Internal Pull Up Resistor on VINOK_H			1		kΩ
SMB_ALERT_L Output						
V_{ext}	Maximum External Pull Up Voltage				12	V
V_{OL}	Output Low Level Voltage	I_{source} < 4 mA	0		0.4	V
I_{OH}	Maximum High-Level Leakage Current				10	µA
$R_{puSMB_ALERT_L}$	Internal Pull Up Resistor on SMB_ALERT_L Recommeded external pull up resistor		 2	None 10		kΩ kΩ

8.2 INTERFACING WITH SIGNALS

All signal pins have protection diodes implemented to protect internal circuits. When the power supply is not powered, the protection devices start clamping at signal pin voltages exceeding ±0.5 V. Therefore, all input signals should be driven only by an open collector/drain to prevent back feeding inputs when the power supply is switched off. If interconnecting of signal pins of several power supplies is required, then this should be done by decoupling with small signal Schottky diodes, except for SMB_ALERT_L, ISHARE and I²C pins. SMB_ALERT_L pins can be interconnected without decoupling diodes, since these pins have no internal pull up resistor and use a Zener diode as protection device against positive voltage on pins. ISHARE pins must be interconnected without any additional components. This in-/output is disconnected from internal circuits when the power supply is switched off.

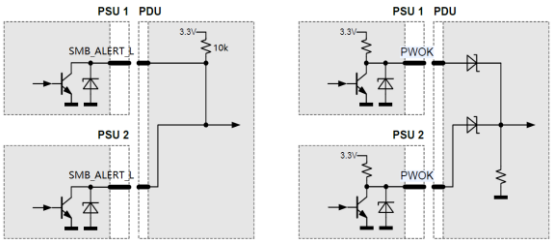

Figure 9. Interconnection of Signal Pins

8.3 FRONT LEDS

are two Bi-color (Green/ Amber) LEDs to indicate power supply status. The LEDs are visible on the power supply's front panel. The LEDs location meets ESD Requirements. Following are these definitions as:

LED FUNCTION	COLOR	BRIGHTNESS
Input Status LED	Green (520 nm – 540 nm) / (Amber color not used)	500-1000cd/m^2
Output Status LED	Green (520 nm – 540 nm) / Amber (520 nm – 540 nm) Amber (587 nm – 595 nm)	500-1000cd/m^2

OPERATING CONDITION	LED BEHAVIOR	
CONDITION	INPUT STATUS LED	OUTPUT STATUS LED
Output ON and OK	GREEN Solid	GREEN Solid
No Input power to all power supplies	OFF	OFF
Power supply warning events where the power supply continues to operate: high temp, high power, high current, over voltage, under voltage, slow fan.	GREEN Solid	1Hz AMBER/GREEN Blinking
Power supply critical event causing a shutdown: failure, OCP, SCP, OVP, UVP, OTP, Fan Fail	GREEN Solid	AMBER Solid
Input over voltage shutdown	1Hz GREEN Blinking	AMBER Solid
Input under voltage shutdown	1Hz GREEN Blinking	OFF
PS_KILL	GREEN Solid	OFF
Input present / Only 12VSB on (PS off)	GREEN Solid	1Hz Blinking GREEN
Power supply in FW upload mode	GREEN Solid	2Hz Blinking GREEN

AMBER/GREEN BLINKING: means AMBER and GREEN LED flash alternately.

Table 1. LED Status

8.4 PRESENT_L

This signaling pin is recessed within the connector and will contact only once all other connector contacts are closed. This active-low pin is used to indicate to a power distribution unit controller that a supply is plugged in. The maximum current on PRESENT_L pin should not exceed 10 mA.

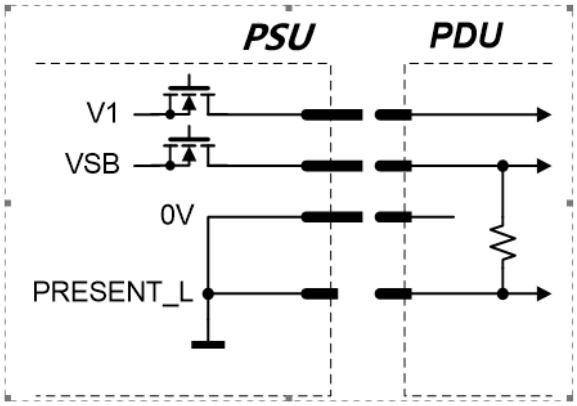

© 2025 Bel Fuse Inc. BCD.20326_A 16 Jul 2025

Figure 10. PRESENT_L signal pin

8.5 PSKILL_H INPUT

The PSKILL_H input is active-high and is located on a recessed pin on the connector and is used to disconnect the main output as soon as the power supply is being plugged out. This pin should be connected to SGND in the power distribution unit.

When PSKILL_H is at high level, both the main output and standby remain turned off.

8.6 VINOK_H

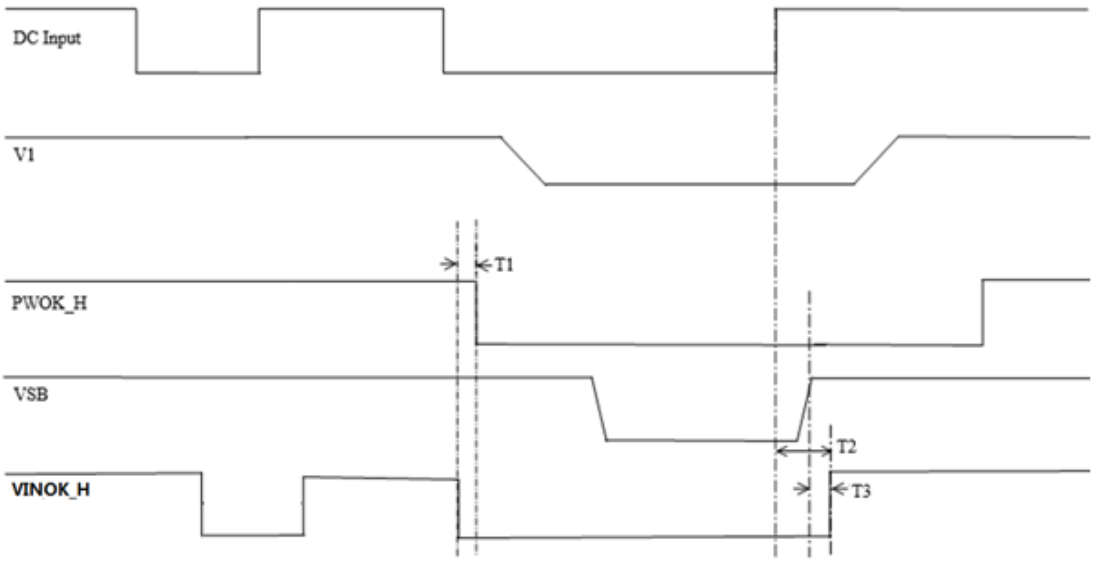

Figure 11. VINOK_H Timing

PARAMETER	DESCRIPTION / CONDITION	MIN	NOM	MAX	UNIT
T1	VIN_OK_H & PWOK_H	0			ms
T2	VIN_OK_H delay to DC			1700	ms
T3	VIN_OK_H to VSB			20	ms

Table 2. VINOK_H Timing Requirement

8.7 TIMING REQUIREMENTS

These are the timing requirements for the power supply operation. The output voltages must rise from 10% to within regulation limits (Tvout_rise) within 1 to 30 ms. All outputs must rise monotonically. The Table below shows the timing requirements for the power supply being turned on and off two ways; 1) via the DC input with PSON_L held low; 2) via the PSON_L signal with the DC input applied. The PSU needs to remain off for 1 second minimum after PWOK_H is de-asserted.

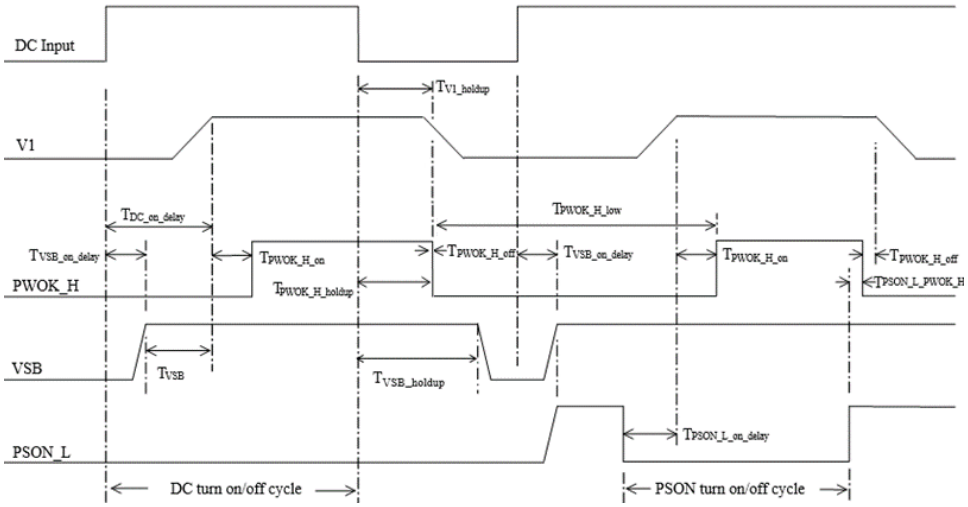

Figure 12. Timing Requirement

PARAMETER	DESCRIPTION / CONDITION	MIN	NOM	MAX	UNIT
T_{V1_rise}	Output voltage rise time	1.0		30	ms
$T_{VSB_on_delay}$	Delay from DC being applied to VSB being within regulation.			2000	ms
$T_{DC_on_delay}$	Delay from DC being applied to all output voltages being within regulation.			3000	ms
$T_{PWOK_H_holdup}$	Delay from loss of DC to de-assertion of PWOK_H	0			ms
$T_{PSON_L_on_delay}$	Delay from PSON_L active to output voltages within regulation limits.	5		400	ms
$T_{PSON_L_PWOK_H}$	Delay from PSON_L deactivate to PWOK_H being de-asserted.			5	ms
$T_{PWOK_H_on}$	Delay from output voltages within regulation limits to PWOK_H asserted at turn on.	100		500	ms
$T_{PWOK_H_low}$	Duration of PWOK_H being in the de-asserted state during an off/on cycle using PSON_L signal.	100			ms
T_{VSB}	Delay from VSB being in regulation to O/Ps being in regulation at DC turn on.	50		1000	ms
T_{VSB_holdup}	Time the VSB output voltage stays within regulation after loss of DC.	2			ms
$T_{DC_off_SMB_ALERT_L}$	The power supply shall assert the SMB_ALERT_L signal quickly after a loss of DC input voltage.			2	ms

8.8 CURRENT SHARE

The TFS front-ends have an active current share scheme implemented for V_1. All the ISHARE current share pins need to be interconnected in order to activate the sharing function. If a supply has an internal fault or is not turned on, it will disconnect its ISHARE pin from the share bus. This will prevent dragging the output down (or up) in such cases.

The current share function uses a digital bi-directional data exchange on a recessive bus configuration to transmit and receive current share information. The controller implements a Master/Slave current share function. The power supply providing the largest current among the group is automatically the Master. The other supplies will operate as Slaves and increase their output current to a value close to the Master by slightly increasing their output voltage. The voltage increase is limited to +250 mV.

The standby output uses a passive current share method (droop output voltage characteristic).

© 2025 Bel Fuse Inc. BCD.20326_A 16 Jul 2025

8.9 VSB VOLTAGE SELECTION (VSB_SEL1, VSB_SEL2)

The standby output voltage can be configured to three different values: 3.3V, 5V and 12V by pulling VSB_SEL1 and VSB_SEL2 input pins either to GND (Logic Low) or to 3.3V （The internal part of PSU has been pulled up to 3.3V through 1K, and the external part only needs to be OPEN）.

VSB_SEL1	VSB_SEL2	VSB Voltage	UNIT
1	1	3.3	V
0	1	5	V
1	0	12	V
0	0	Invalid (Off)	

8.10 SENSE INPUTS

Main output has sense lines implemented to compensate for voltage drop on load wires (no sense lines for 12VSB). The maximum allowed voltage drop is 200 mV on the positive rail and 100 mV on the PGND rail.

With open sense inputs the main output voltage will rise by 250 mV. Therefore, if not used, these inputs should be connected to the power output and PGND close to the power supply connector. The sense inputs are protected against short circuit. In this case the power supply will shut down.

8.11 HOT-STANDBY OPERATION

The hot-standby operation is an operating mode allowing to further increase efficiency at light load conditions in a redundant power supply system. Under specific conditions one of the power supplies is allowed to disable its Oring gate. This will save the power losses associated with this power supply and at the same time the other power supply will operate in a load range having a better efficiency. In order to enable the hot standby operation, the HOTSTANDBYEN_H and the ISHARE pins need to be interconnected. A power supply will only be allowed to enter the hot-standby mode, when the HOTSTANDBYEN_H pin is high, the load current is low, and the supply was allowed to enter the hot-standby mode by the system controller via the appropriate I²C command (by default disabled). The system controller needs to ensure that only one of the power supplies is allowed to enter the hot-standby mode.

If a power supply is in a fault condition, it will pull low its active-high HOTSTANDBYEN_H pin which indicates to the other power supply that it is not allowed to enter the hot-standby mode or that it needs to return to normal operation should it already have been in the hot-standby mode.

NOTE: The system controller needs to ensure that only one of the power supplies is allowed to enter the hot-standby model.

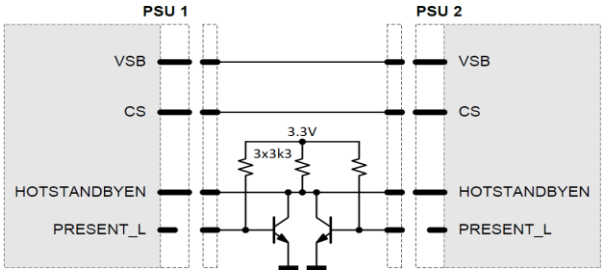

Figure 13. Recommended hot-standby configuration

In order to prevent voltage dips when the active power supply is unplugged while the other is in hot-standby mode, it is strongly recommended to add the external circuit as shown in *Figure 13.* If the PRESENT_L pin status needs also to be read by the system controller, it is recommended to exchange the bipolar transistors with small signal MOS transistors or with digital transistors.

8.12 PSON_L INPUT

The PSON_L is an internally pulled up (3.3 V) input signal to enable/disable the main output V1 of the front-end. With low level input the main output is enabled. This active-low pin is also used to clear any latched fault condition. The PSON_L can be either controlled by an open collector device or by a voltage source.

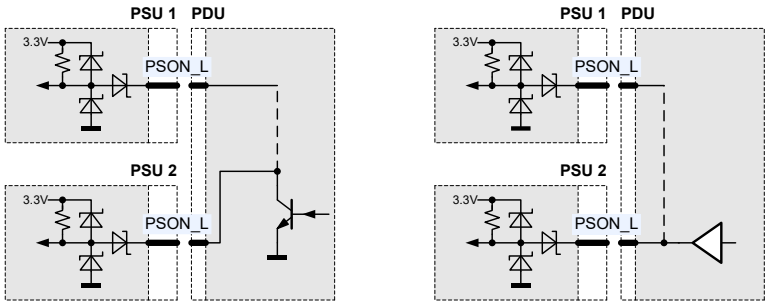

Figure 14. PSON_L connection

8.13 I2C / SMBUS COMMUNICATION

The interface driver in the TFS supply is referenced to the V1 Return. The TFS supply is a communication Slave device only; it never initiates messages on the I2C/SMBus by itself. The communication bus voltage and timing are defined in *Table 3* further characterized through:

- The SDA/SCL IOs use 3.3V/5V logic levels
- External pull-up resistors on SDA/SCL required for correct signal edges
- Full SMBus clock speed of 100 kbps
- Clock stretching limited to 1 ms
- SCL low time-out of >25 ms with recovery within 10 ms
- Recognizes any time Start/Stop bus conditions

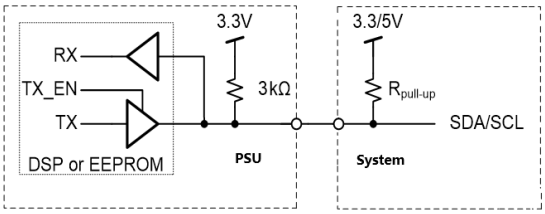

Figure 15. Physical layer of communication interface

The SMB_ALERT_L signal indicates that the power supply is experiencing a problem that the system agent should investigate. This is a logical OR of the Shutdown and Warning events. The power supply responds to a read command on the general SMB_ALERT_L call address 25(0x19) by sending its status register.

Communication to the DSP or the EEPROM will be possible as long as the input DC voltage is provided. If no DC is present, communication to the unit is possible as long as it is connected to a life V1 output (provided e.g. by the redundant unit). If only VSB is provided, communication is not possible.

© 2025 Bel Fuse Inc. BCD.20326_A 16 Jul 2025

PARAMETER	DESCRIPTION / CONDITION		MIN	NOM	MAX	UNIT
V_{iL}	Input low voltage		-0.5		0.8	V
V_{iH}	Input high voltage		2.3		5.5	V
V_{hys}	Input hysteresis		0.15			V
V_{oL}	Output low voltage	3 mA sink current	0		0.4	V
t_r	Rise time for SDA and SCL		20+0.1Cb[1]		1000	Ns
t_{of}	Output fall time ViHmin → ViLmax	10 pF < Cb[1] < 400 pF	20+0.1Cb[1]		300	Ns
I_i	Input current SCL/SDA	0.1 VDD < Vi < 0.9 VDD	-10		10	µA
C_i	Internal Capacitance for each SCL/SDA				50	pF
f_{SCL}	SCL clock frequency		0		100	kHz
R_{pu}	External pull-up resistor	f_{SCL} ≤ 100 kHz			1000 ns / Cb	Ω
t_{HDSTA}	Hold time (repeated) START	f_{SCL} ≤ 100 kHz	4.0			µs
t_{LOW}	Low period of the SCL clock	f_{SCL} ≤ 100 kHz	4.7			µs
t_{HIGH}	High period of the SCL clock	f_{SCL} ≤ 100 kHz	4.0			µs
t_{SUSTA}	Setup time for a repeated START	f_{SCL} ≤ 100 kHz	4.7			µs
t_{HDDAT}	Data hold time	f_{SCL} ≤ 100 kHz	0		3.45	µs
t_{SUDAT}	Data setup time	f_{SCL} ≤ 100 kHz	250			ns
t_{SUSTO}	Setup time for STOP condition	f_{SCL} ≤ 100 kHz	4.0			µs
t_{BUF}	Bus free time between STOP and START	f_{SCL} ≤ 100 kHz	5			ms

1 Cb = Capacitance of bus line in pF, typically in the range of 10…400 pF

Table 3. I2C / SMBus Specification

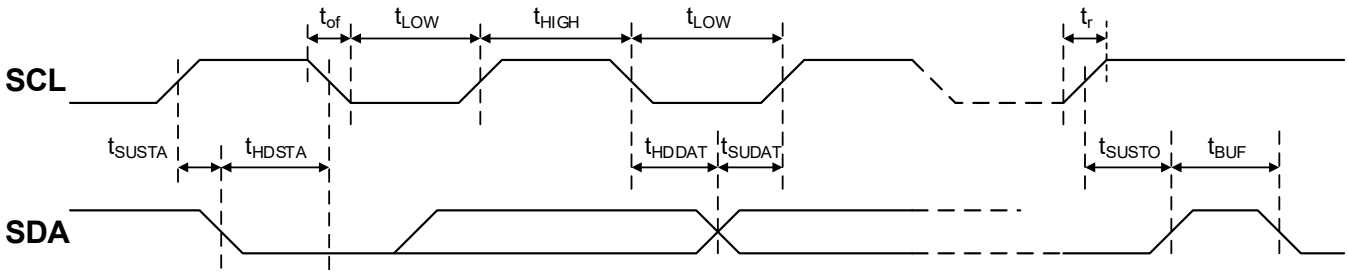

Figure 16. I2C / SMBus Timing

8.14 ADDRESS / PROTOCOL SELECTION (APS)

The APS pin provides the possibility to select the address by connecting a resistor to V1 return (0 V). A fixed addressing offset exists between the Controller and the EEPROM.

NOTES:

- If the APS pin is left open, the supply will operate with the Power Management Bus protocol at controller / EEPROM addresses 0xBE / 0xAE.
- The APS pin is only read at start-up of the power supply. Therefore, it is not possible to change address dynamically.

R_{APS} (Ω) [1]	Protocol	I2C Address [2] Controller	EEPROM
820	Power Management Bus	0xB0	0xA0
2700		0xB2	0xA2
5600		0xB4	0xA4
8200		0xB6	0xA6
15000	Power Management Bus	0xB8	0xA8
27000		0xBA	0xAA
56000		0xBC	0xAC
180000		0xBE	0xAE

1 E24 resistor values, use max 5% resistors2

2 The LSB of the address byte is the R/W bit

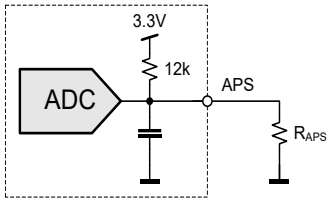

Figure 17. I2C address and protocol setting

8.15 CONTROLER AND EEPROM ACCESS

The controller and the EEPROM in the power supply share the same I2C bus physical layer see Figure 18. An I2C driver device assures logic level shifting (3.3/5 V) and a glitch-free clock stretching. The driver also pulls the SDA/SCL line to nearly 0 V when driven low by the DSP or the EEPROM providing maximum flexibility when additional external bus repeaters are needed. Such repeaters usually encode the low state with different voltage levels depending on the transmission direction.

The DSP will automatically set the I2C address of the EEPROM with the necessary offset when its own address is changed / set. In order to write to the EEPROM, first the write protection needs to be disabled by sending the appropriate command to the DSP. By default, the write protection is on.

The EEPROM provides 256 bytes of user memory. None of the bytes are used for the operation of the power supply.

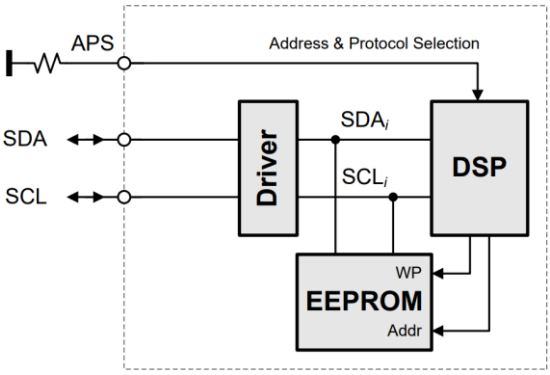

Figure 18. I2C Bus to DPS and EEPROM

8.16 EEPROM PROTOCOL

The EEPROM follows the industry communication protocols used for this type of device. Even though page write / read commands are defined, it is recommended to use the single byte write / read commands.

WRITE

© 2025 Bel Fuse Inc. BCD.20326_A 16 Jul 2025

The write command follows the SMBus 1.1 Write Byte protocol. After the device address with the write bit cleared a first byte with the data address to write to is sent followed by the data byte and the STOP condition. A new START condition on the bus should only occur after 5ms of the last STOP condition to allow the EEPROM to write the data into its memory.

READ

The read command follows the SMBus 1.1 Read Byte protocol. After the device address with the write bit cleared the data address byte is sent followed by a repeated start, the device address and the read bit set. The EEPROM will respond with the data byte at the specified location.

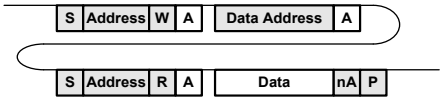

8.17 POWER MANAGEMENT BUS PROTOCOL

The Power Management Bus is an open standard protocol that defines means of communicating with power conversion and other devices. For more information, please see the System Management Interface Forum web site at www.powerSIG.org.

Power Management Bus command codes are not register addresses. They describe a specific command to be executed.

The TFS1500-12-054xD series supply supports the following basic command structures:

- Clock stretching limited to 1 ms
- SCL low time-out of >25 ms with recovery within 10 ms
- Recognized any time Start/Stop bus conditions

WRITE

The write protocol is the SMBus 1.1 Write Byte/Word protocol. Note that the write protocol may end after the command byte or after the first data byte (Byte command) or then after sending 2 data bytes (Word command).

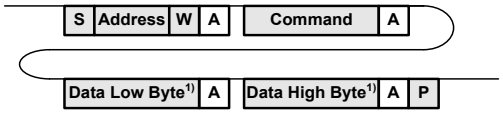

1) Optional

In addition, Block write commands are supported with a total maximum length of 255 bytes. See TFS Programming Manual for further information.

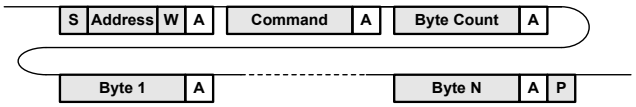

READ

The read protocol is the SMBus 1.1 Read Byte/Word protocol. Note that the read protocol may request a single byte or word.

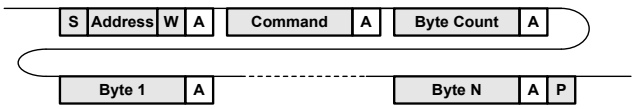

In addition, Block read commands are supported with a total maximum length of 255 bytes.

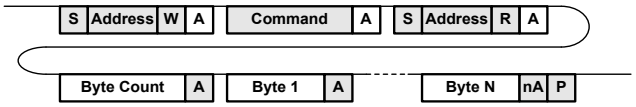

8.18 POWER SUPPLY DIAGNOSTIC "EVENT RECORDER"

The power supply shall save the latest data and other pertinent data into nonvolatile memory when a critical event shuts down the power supply. This data shall be accessible via the Power Management Bus communication interface with an external source providing power to the 12Vstby output.
Critical Events to trigger an update to the Event Recorder includes:

- Output OVP
- Output OCP
- Input OV/UV Fault
- Fan fault
- OTP
- Other faults to cause output shutdown.

Refer to BCA.XXXXX(TBD), the Power Management Bus Communication Application Note for further information about the Power Management Bus Communication commands to support this function.

8.19 FIRMWARE UPDATE AND FIRMWARE REVISION

The power supply shall have the capability to update its firmware via the Power Management Bus interface while it is in standby mode. This FW can be updated when in the system and in standby mode and outside the system with power applied to the 12Vstby pins.

PSU Firmware Revision could be read out by Bel Power Management Bus command, the Hex readout corresponds to different information, example as below.

PMBus Command

Command		Access Type	Data Size (Byte)	Comments
Code	Name			
0xF5	MFR_FIRMWARE_REV	Block Read	6	Firmware Revision Format: HEX Data = MMmmbbMMmmbb (MM = Major, mm = Minor, bb = Build) Example: 010200FFFFFF F1 =01.02.00, F2 = 255.255.255

The Power Management Bus readout firmware revision may be: 010100010000, explanation as below, the build revision is only for Bel internal debugging use and won't be changed, the firmware content update will have major or minor revision change, no build revision change. The version number of F2 reserved, with a default value of FFFFFF.

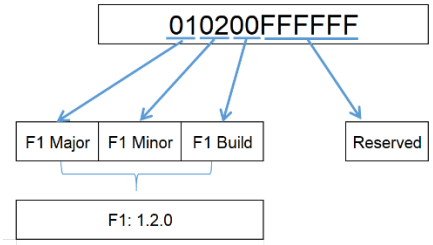

When there's firmware revision update, the firmware bootloader file may be provided to customer for updated firmware verification, the file name explanation as below.

© 2025 Bel Fuse Inc. BCD.20326_A 16 Jul 2025

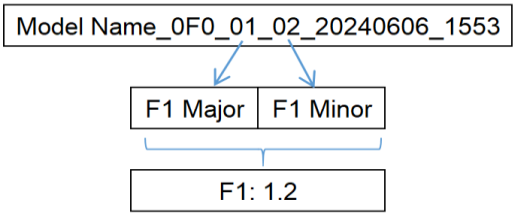

9. TEMPERATURE AND FAN CONTROL

To achieve the best cooling results sufficient airflow through the supply must be ensured. Do not block or obstruct the airflow at the rear of the supply by placing large objects directly at the output connector. The TFS1500-12-054xD series PSU is provided with normal airflow, which means the air enters through the DC output connector side of the supply and leaves at the DC input connector side. TFS supplies have been designed for horizontal operation. The TFS1500-12-054xD series is provided with a front to rear airflow.

The fan inside of the supply is controlled by a microprocessor. The RPM of the fan is adjusted to ensure optimal supply cooling and is a function of output power and the inlet temperature.

For the normal airflow version additional constraints apply because of the DC-connector. In a normal airflow unit, the hot air is exiting the power supply unit at the DC-inlet.

NOTE: It is the responsibility of the user to check the front temperature in such cases. The unit is not limiting its power automatically to meet such a temperature limitation.

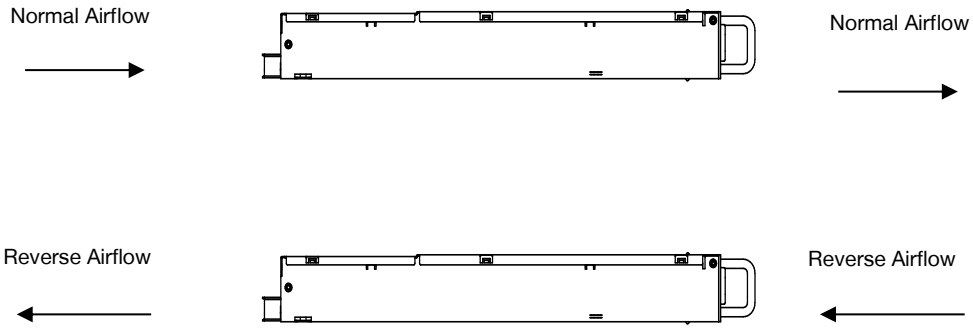

Figure 19. Airflow direction

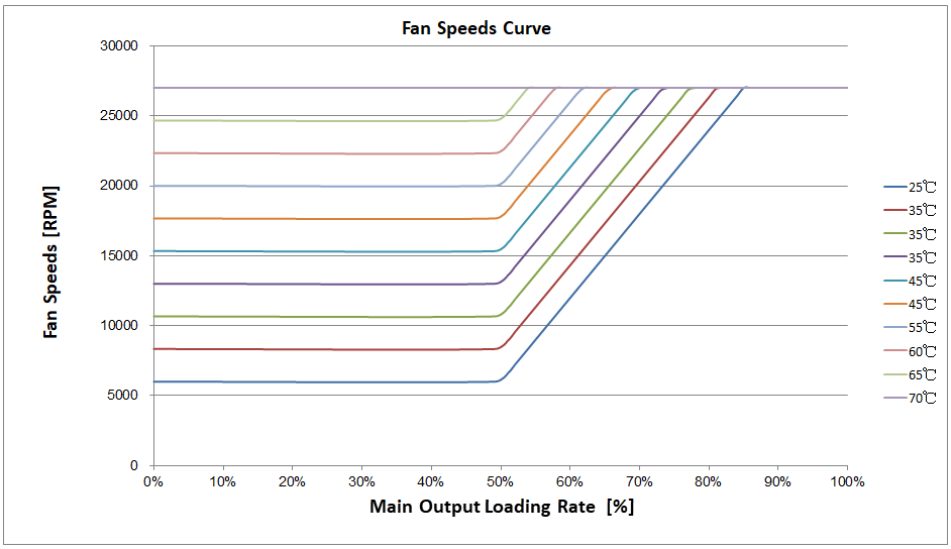

Figure 20. Fan speed vs. main output load

10. ELECTROMAGNETIC COMPATIBILITY

10.1 IMMUNITY

NOTE: Most of the immunity requirements are derived from EN 55035.

TEST	STANDARD / DESCRIPTION	CRITERIA
ESD Contact Discharge	IEC / EN 61000-4-2,Level 4,±8 kV	A
ESD Air Discharge	IEC / EN 61000-4-2,Level 4, ±15 kV	A
Radiated Electromagnetic Field	IEC / EN 61000-4-3, Level 3,10 V/m, 1 kHz/80% Amplitude Modulation 80MHz - 1000MHz, 1800MHz, 2600MHz, 3500MHz, 5000MHz	A
Burst	IEC / EN 61000-4-4, Level 2 Input DC port ±1 kV	A
Surge	IEC / EN 61000-4-5 Level 2 Line to earth: ±1 kV 12 Ω Line to line: ±1 kV 2 Ω	A
RF Conducted Immunity	IEC / EN 61000-4-6, Level 3, 10 Vrms, CW,0.15…80MHz	A

10.2 EMISSION

TEST	STANDARD / DESCRIPTION	CRITERIA
Conducted Emission	EN 55032:2015 / CISPR 32:2015: 0.15 … 30 MHz, QP and AVG	Class A
Radiated Emission	EN 55032:2015 / CISPR 32:2015: 30 MHz … 1 GHz, QP	Class A

© 2025 Bel Fuse Inc. BCD.20326_A 16 Jul 2025

11. SAFETY APPROVALS

Maximum electric strength testing is performed in the factory according to IEC/EN 62368, and UL 62368. Input-to-output electric strength tests should not be repeated in the field. Bel Power Solutions will not honor any warranty claims resulting from electric strength field tests.

PARAMETER	DESCRIPTION / CONDITION	NOTE
Agency Approvals	CAN/CSA C22.2 No. 62368-1 UL 62368-1 IEC/EN 62368-1 CQC: GB17625.1, GB4943.1, GB/T9254.1	Approved
Isolation Strength	Input (+/-) to chassis (PE)	Basic
	Input (+/-) to output	Basic
Electrical Strength Test	Input to output	1500 VDC
	Input to chassis	1500 VDC
	Output to chassis	200 VDC

12. ENVIRONMENTAL SPECIFICATIONS

Power supply shall meet the thermal requirements under the load and environmental condition identified in each table. Even though the table addresses only the exhaust air temperature, all other components in the power supply shall also meet their temperature specifications and lifetime requirements.

The power supply must meet UL enclosure requirements for temperature rise limits. All sides of the power supply with exception to the air exhaust side must be classified as “Handle, knobs, grips, etc. held for short periods of time only”.

In case the exit air temperature requirement cannot be met, the power supply must have a warning label for high touch temperature that is in compliance with UL/IEC 62368-1 and additionally 85°C rated power cords must also be used with this power supply

PARAMETER		DESCRIPTION / CONDITION	MIN	NOM	MAX	UNIT
T_A	Ambient Temperature	$V_{I\,min}$ to $V_{I\,max}$, $I_{I\,nom}$, $I_{SB\,nom}$	-5		+55	°C
T_{Aext}	Extended Temp. Range	Derated output	+56		+65	°C
	Humidity	Operating Humidity (Non-condensing) Non Operating Humidity (non condensing)			85 95	% %
T_S	Storage Temperature	Non-operational	-40		+70	°C
	Altitude	*Operational, above Sea Level*	-		3000	m
N_a	Audible Noise	$V_{I\,nom}$, 50% $I_{o\,nom}$, T_A = 25°C		60		dBA

13. RELIABILITY

PARAMETER		DESCRIPTION / CONDITION	MIN	NOM	MAX	UNIT
MTBF	Mean time between failure	T_A = 40°C, 100% load, according Telcordia SR-332, issue 4	500			kh

Comment: All components de-rating follows IPC9592B latest revision

14. MECHANICAL SPECIFICATIONS

PARAMETER	DESCRIPTION / CONDITION	MIN	NOM	MAX	UNIT
Dimensions	Width		54.5		mm
	Height		40.0		
	Depth		228.6		
Weight			0.79		Kg

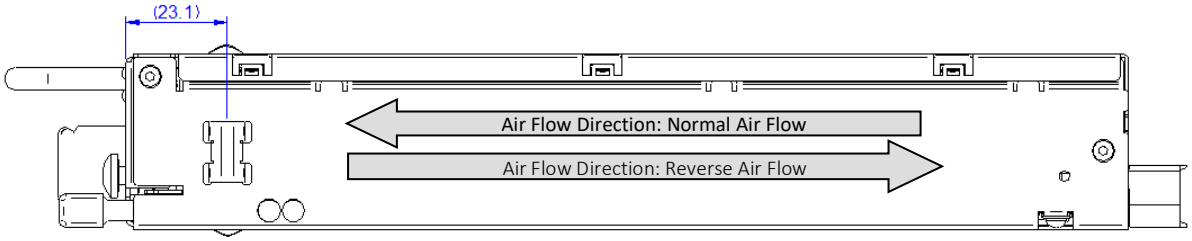

Figure 21. Side View 1

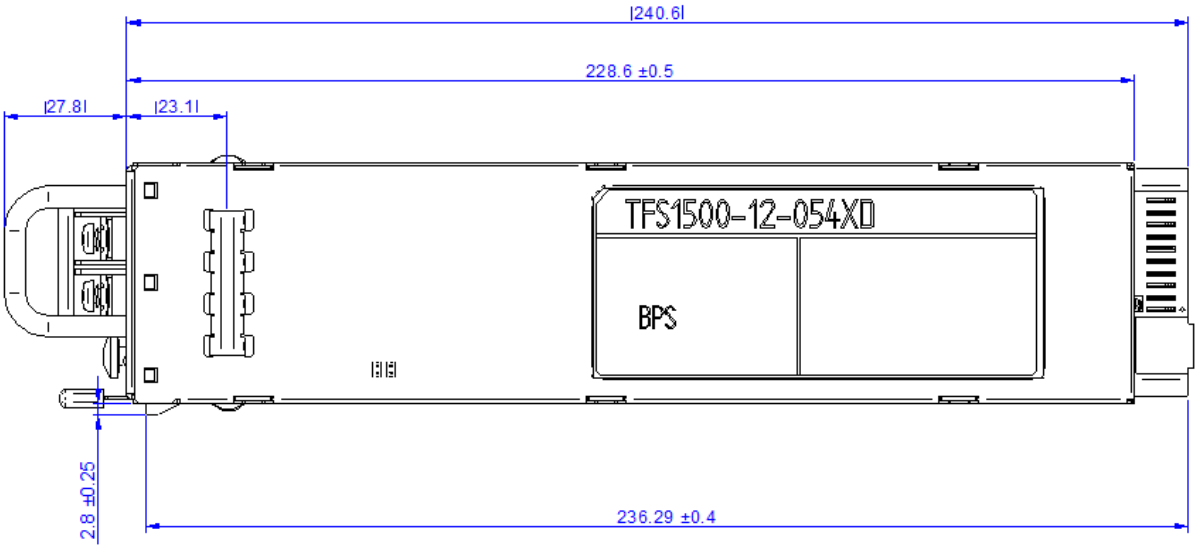

Figure 22. Top View

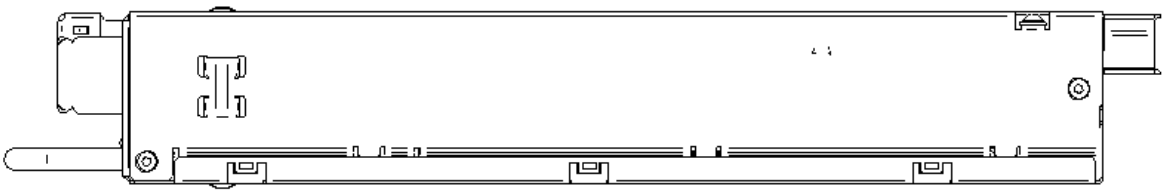

© 2025 Bel Fuse Inc. BCD.20326_A 16 Jul 2025

Figure 23. Side View 2

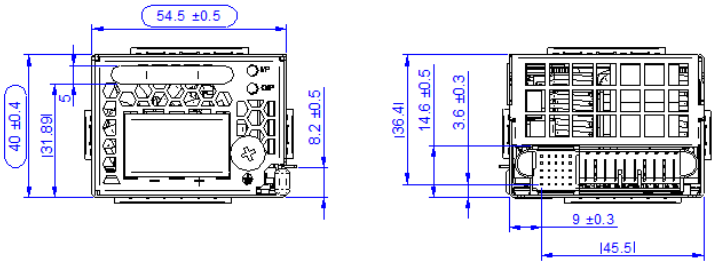

Figure 24. Front and Rear View

15. CONNECTIONS

15.1 INPUT CONNECTOR (TFS1500-12-054XD)

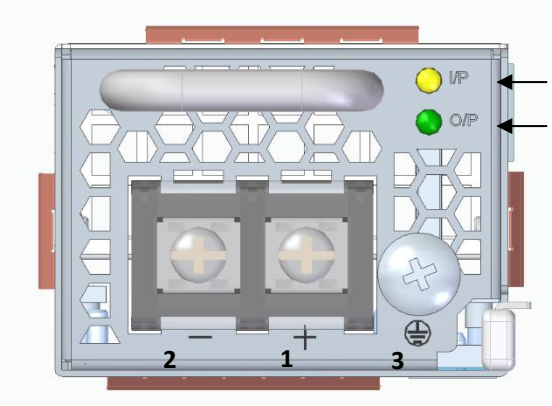

PIN	NAME	DESCRIPTION
Input		
1	Vin+	Input positive
2	Vin-	Input negative
3	PE	Ground ⏚

DC input connector: Dinkle DT-7C-B14W-02 or Degson: DG78R-B-02P-13-00A(H)

15.2 OUTPUT CONNECTOR

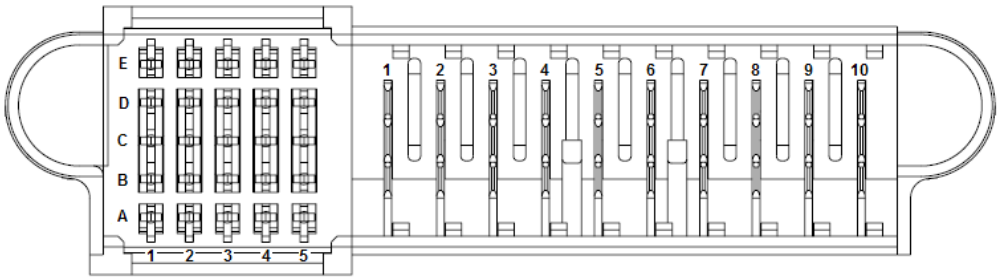

Power Supply Connector: Tyco Electronics P/N 1926736-3 or FCI P/N 10133129-002LF
(NOTE: Column 5 is recessed (short pins))

Mating Connector: Tyco Electronics P/N 2-1926739-5 or FCI 10108888-R10253SLF

15.2.1 PIN DEFINITION

PIN	NAME	DESCRIPTION
Output		
6, 7, 8, 9, 10	V1	+12 VDC main output
1, 2, 3, 4, 5	PGND	Power ground (return)
Control Pins		
A1	VSB	Standby positive output
B1	VSB	Standby positive output
C1	VSB	Standby positive output
D1	VSB	Standby positive output
E1	VSB	Standby positive output
A2	SGND	Signal ground (VSB return)
B2	SGND	Signal ground (VSB return)
C2	HOTSTANDBYEN_H	Hot standby enable signal: active-high
D2	VSB_SENSE_R	Standby output negative sense
E2	VSB_SENSE	Standby output positive sense
A3	APS	I^2C address and protocol selection (select by a pull-down resistor)
B3	N/C	Reserved
C3	SDA	I^2C data signal line
D3	V1_SENSE_R	Main output negative sense
E3	V1_SENSE	Main output positive sense
A4	SCL	I^2C clock signal line
B4	PSON_L	Power supply on input (connect to A2/B2 to turn unit on): active-low
C4	SMB_ALERT_L	SMB Alert signal output: active-low
D4	VSB_SEL1	Standby voltage selection (See section 8.9)
E4	VINOK_H	DC input OK signal: active-high
A5	PSKILL_H	Power supply kill (lagging pin): active-high
B5	ISHARE	Current share bus (lagging pin)
C5	PWOK_H	Power OK signal output (lagging pin): active-high
D5	VSB_SEL2	Standby voltage selection (See section 8.9)
E5	PRESENT_L	Power supply present (lagging pin): active-low

© 2025 Bel Fuse Inc. BCD.20326_A 16 Jul 2025

16. ACCESSORIES

ITEM	DESCRIPTION	ORDERING PART NUMBER	SOURCE
	Dual Connector Board Connector board to operate 2 TFS units in parallel. Includes an on-board USB to I²C converter (use *Bel Power Solutions I²C Utility* as desktop software).	YTM.G2Q01.0	belfuse.com/power-solutions

17. REVISION HISTORY

DATE	REVISION	CHANGE	PREPARED BY	APPROVED BY	ECO No.
2025/07/10	A	Release to Version A	Chad Cai/ZC Wei	Gang Wang	CO142476

For more information on these products consult: powersupport@belf.com

NUCLEAR AND MEDICAL APPLICATIONS - Products are not designed or intended for use as critical components in life support systems, equipment used in hazardous environments, or nuclear control systems.
TECHNICAL REVISIONS - The appearance of products, including safety agency certifications pictured on labels, may change depending on the date manufactured. Specifications are subject to change without notice.