PEC1300-12-074xD

DC-DC CRPS Front-End Power Supply

PEC1300-12-074xD is a 1300 Watt, CRPS DC to DC power supply module with a +12 V main DC output and a +12 V standby output. The power supply operates as a single supply, or N+1 parallel configuration.
PEC1300-12-074xD utilizes full digital control architecture for greater efficiency, control and functionality.
This power supply meets international safety standards and displays the CE-Mark for the European Low Voltage Directive (LVD).

KEY FEATURES

- Input Voltage Range -36 to -72 VDC
- Output Voltage 12 VDC
- +12 VSB (2.1 A) Standby Output
- Output Power up to 1300 W
- Intel Standard CRPS Form Factor
- Dimensions: 185 x 73.5 x 40 mm (7.28 x 2.89 x 1.57 in)
- High Power Density
- UL/CSA 62368-1, EN/IEC 62368-1 Safety Approved
- Supports N+1 Redundancy, Cold Redundancy, Internal ORing
- Black Box Recorder, Bootloader
- Clockwise and Counter-Clockwise Fan Rotation
- Supports Power Management Bus Communication Protocol

APPLICATIONS

- Networking Switches
- Servers & Routers
- Telecommunications

1. ORDERING INFORMATION

PEC	1300	-	12	-	074	x	D
Product Family	**Power Level**	**Dash**	**V1 Output**	**Dash**	**Width**	**Airflow**	**Input**
PEC Front-Ends	1300 W		12 V		73.5 mm	N: Normal R: Reverse	D: DC

2. INPUT

PARAMETER	DESCRIPTION / CONDITION	MIN	NOM	MAX	UNIT
DC Input Voltage Range	Low voltage DC range (1000 W)	36	38	40	VDC
DC Input Voltage Start-up	Low voltage DC range (1000 W)	34		36	VDC
DC Input Voltage Power Off	Low voltage DC range (1000 W)	32		34	VDC
High Voltage DC Range Only	1300 W	40	48	72	VDC
Input Current	@ full load			40	A
DC Inrush Current				60	Apk
Efficiency	@10% load (48 VDC)	N/A			%
	@20% load (48 VDC)	88			%
	@50% load (48 VDC)	92			%
	@100% load (48 VDC)	88			%
Dropout / Hold-up Time	@ 70% of max loading		4		ms
12 V_{SB} Hold-up Time		70			ms
DC Line Isolation	Primary to secondary; reinforced insulation (per IEC 60950-1)	500 700			VAC VDC

Note: Brown-in/out loading is 70% load (low line and high line)

3. OUTPUT

PARAMETER	DESCRIPTION / CONDITION	MIN	NOM	MAX	UNIT
Output Voltage	VDC adjusted to 12 VDC +/- 0.1 VDC @ 50% load		12		VDC
Voltage Regulation Limits	± 5 %	+11.4	+12	+12.6	V_{RMS}
Max Continuous Output Power	Low voltage 1000 W			1300	W
Output Current	Low voltage (36 – 40 VDC) High voltage (40 – 72 VDC)	0		83 108	A
Load Regulation			± 3		%
Line Regulation			± 1		%
Overshoot / Undershoot			± 5		%
Transient Load	Δ Step Load Size 50% of Load Max			0.5	A/µs
Capacitive Loading		2200		20000	µF
Output Ripple & Noise	20 MHz BW			120	mVpp
+12V_{SB} OUTPUT					
+12V_{SB} Output Voltage			+ 12		V_{SB}
Voltage Regulation Limits	± 5 %	+11.4	+12	+12.6	V_{RMS}
+12V_{SB} Output Current		0		2.1	A

© 2026 Bel Fuse Inc. BCD.01077_F 2/5/2026

Load Regulation			± 3		%
Line Regulation			± 1		%
Overshoot / Undershoot			± 5		%
Transient Load	Δ Step Load Size 1 A			0.5	A/µs
Capacitive Loading		100		3100	µF
Output Ripple & Noise	20 MHz BW			120	mVpp

3.1 POWER RATINGS

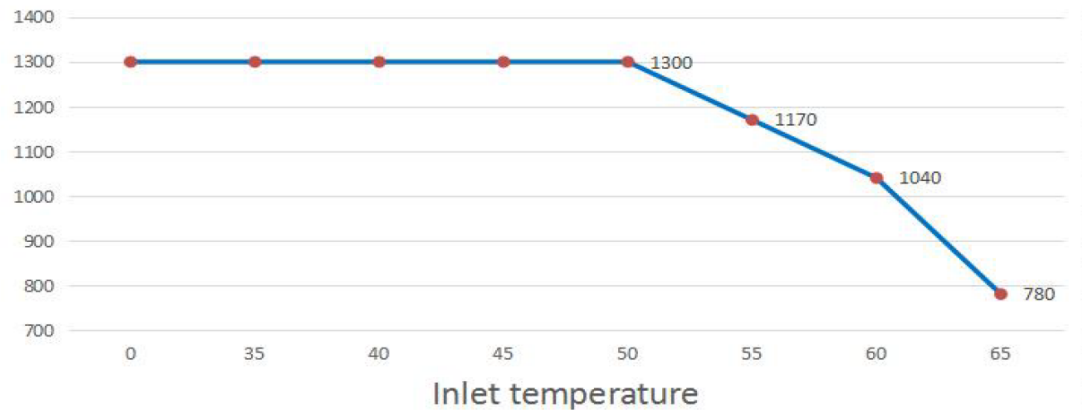

Figure 1. Power de-rating Curve for 40 ~ 72 VDC

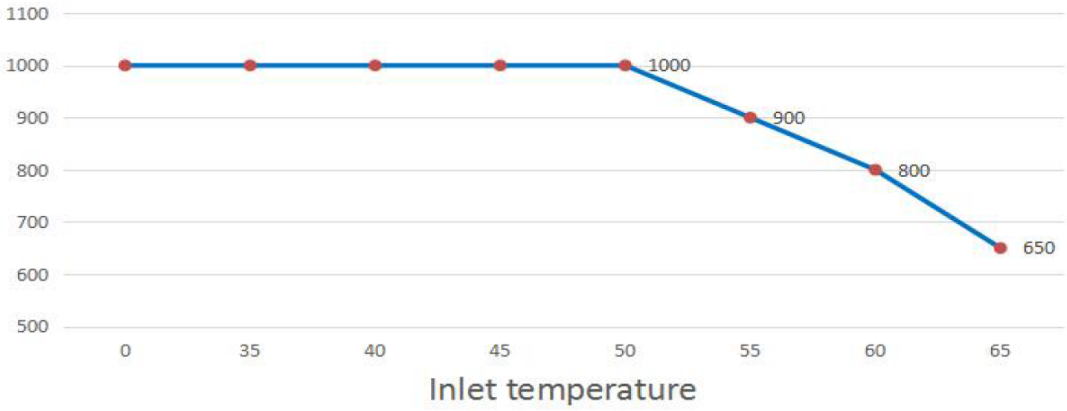

Figure 2. Power de-rating Curve for 36 ~ 40 VDC

© 2026 Bel Fuse Inc. BCD.01077_F 2/5/2026

3.2 TIMING REQUIREMENTS

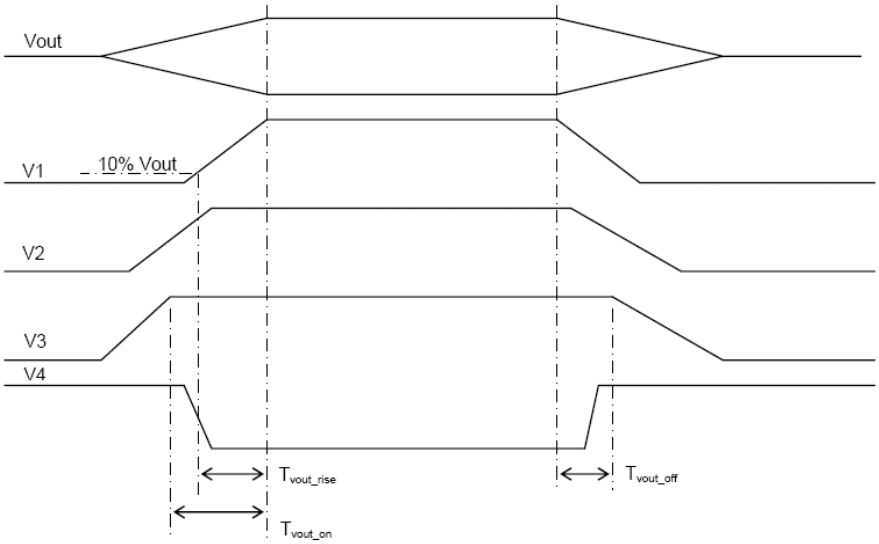

Figure 3. Signal Timing Sequence 1

Timing Values for Signal Timing Sequence 1:

ITEM	DESCRIPTION	MIN	MAX	UNITS
Tvout rise	Output voltage rise time from each main output.	2	70	ms
T12vsb rise	Output voltage rise time for the +12VSB output.	1	50	ms
Tvout_on	All main outputs must be within regulation of each other within this time.		50	ms
Tvout off	All main outputs must leave regulation within this time.		400	ms

© 2026 Bel Fuse Inc. BCD.01077_F 2/5/2026

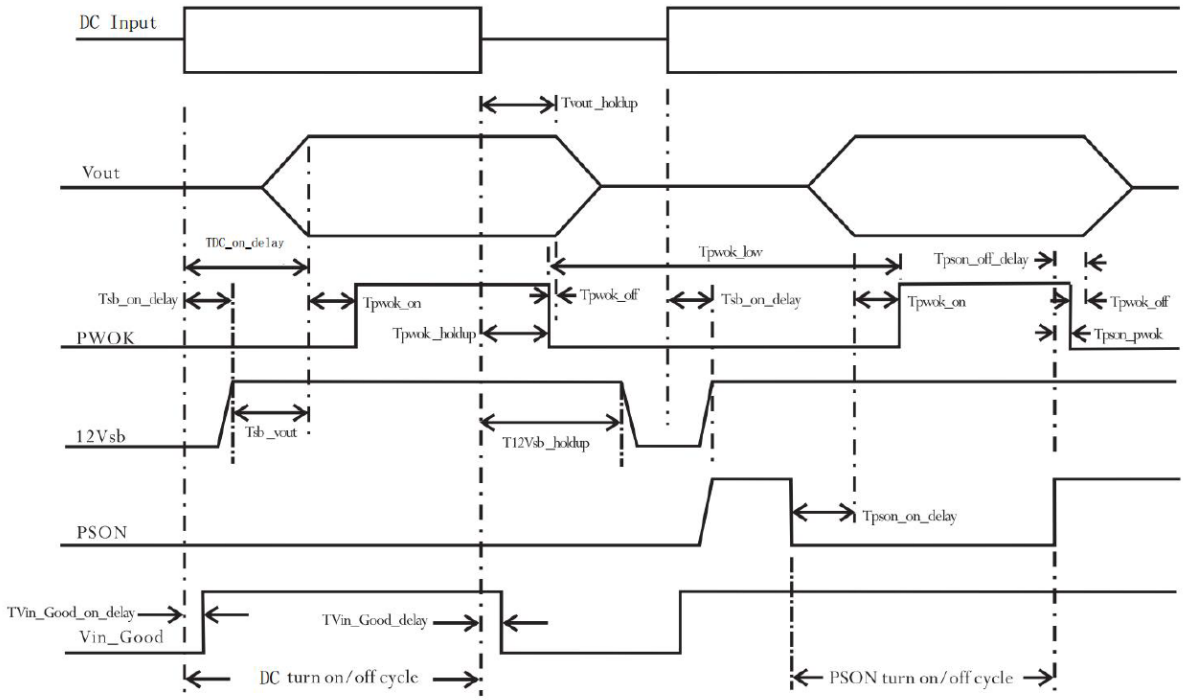

Figure 4. Signal Timing Sequence 2

Timing Values for Signal Timing Sequence 2:

ITEM	DESCRIPTION	MIN	MAX	UNITS
$T_{sb_on\ delay}$	Delay from DC being applied to 12VSB being within regulation.		1500	ms
$T_{dc_on_delay}$	Delay from DC being applied to all output voltages being within regulation.		2500	ms
$T_{vout\ holdup}$	Time 12V output voltage dropping to regulation after loss of DC at 70% load condition.	4		ms
$T_{pwok\ holdup}$	Delay from loss of DC to desertion of PWOK at 70% load condition.	3		ms
$T_{pson_on_delay}$	Delay from PSON# active to output voltages within regulation limits.	5	400	ms
$T_{pson\ pwok}$	Delay from PSON# deactivate to PWOK being deserted.		5	ms
T_{pwok_on}	Delay from output voltages within regulation limits to PWOK asserted at turn on.	100	500	ms
$T_{pwok\ off}$	Delay from PWOK de-asserted to +12V dropping out of regulation limits.	1		ms
T_{pwok_low}	Duration of PWOK being in the deserted state during an off/on cycle using DC or the PSON# signal.	100		ms
T_{sb_vout}	Delay from 12 VSB being in regulation to O/Ps being in regulation at DC turn on.	50	2000	ms
$T_{12Vsb\ holdup}$	Time the +12VSB output voltage stays within regulation after loss of DC.	70		ms
$T_{Vin_Good_on_delay}$	Delay from DC being applied to Vin_Good signal being high level.	100		ms
$T_{Vin_Good_delay}$	The time interval between DC lost to Vin_Good signal gets asserted.		4	ms

© 2026 Bel Fuse Inc. BCD.01077_F 2/5/2026

4. PROTECTION

Protection circuits inside the power supply shall cause only the power supply's main outputs to shut down. If the power supply latches off due to a protection circuit tripping, an DC cycle OFF for 15 sec and a PSON# cycle HIGH for 1 sec shall be able to reset the power supply.

PARAMETER	DESCRIPTION / CONDITION	MIN	NOM	MAX	UNIT
Slow Over Current Protection (OCP)	Shutdown and latch after MIN/MAX timing	20 ms Rating + 10 A		200 ms Rating + 18 A	
Slow OCW	Slow over current warning (SMBAlert#)	10 ms Rating + 6 A		15 ms Rating + 10 A	
OCPstby (Stby Over Current Protection)	Shutdown, hiccup mode	1 ms 2.5 A		100 ms 4.0 A	
Over Voltage Protection (OVP)	+12 V	13.3	14	14.5	V
	+12 V_{SB}	13.3	14	14.5	V
Over Temperature Protection (OTP)	Shutdown		73		°C
Over Temperature Warning (OTW)	Normal working, de-assert SMBAlert#		70		°C
Short Circuit Protection (SCP)	Shut down and latch off				

4.1 OVERVOLTAGE PROTECTION (OVP)

The power supply over voltage protection is locally sensed. The power supply shuts down and latches off after an over voltage condition occurs. This latch will be cleared by toggling the PSON# signal or by an DC power interruption. The values are measured at the output of the power supply's connectors. The voltage should never exceed the maximum levels when measured at the power connectors of the power supply connector during any single point of fail. The voltage should never trip any lower than the minimum levels when measured at the power connector. 12VSB will be auto-recovered after removing OVP limit.

4.2 OVER TEMPERATURE PROTECTION (OTP)

The power supply will be protected against over temperature conditions caused by loss of fan cooling or excessive ambient temperature. In an OTP condition the PSU will shutdown. When the power supply temperature drops to within specified limits, the power supply will restore power automatically, while the 12 VSB remains always on. The OTP circuit must have built in margin such that the power supply will not oscillate on and off due to temperature recovering condition. The OTP trip level has a minimum of 5°C of ambient temperature margin.

4.3 CURRENT LIMITATION (OCP)

The power supply has a current limit to prevent the outputs from exceeding the values shown in table above. If the current limits are exceeded the power supply shuts down and latches off. The latch will be cleared by toggling the PSON# signal or by an DC power interruption. The power supply will not be damaged from repeated power cycling in this condition. 12 VSB will be auto-recovered after removing OCP limit.

4.4 SHORT CIRCUIT PROTECTION (SCP)

The power supply will shut down and latch off for shorting the main outputs. 12 VSB must be capable of being shorted indefinitely. The latch will be cleared by toggling the PSON# signal or by an DC power interruption. The power supply should not be damaged from repeated power cycling in this condition. 12 VSB will be auto-recovered after removing SCP limit.

4.5 OVER POWER PROTECTION (OPP)

The power supply supports over power protection (OPP) level low enough to protect the power supply running in this mode for repeated 1 msec durations at a 1% duty cycle. The power supply will be stable operating at any load point from rated power up to the OPP point.

CRPS-185 Load Requirement: OPP Threshold = (Imax + 49 A) +/- 50 W

SMBAlert will always assert ahead of the OPP threshold being exceeded

© 2026 Bel Fuse Inc. BCD.01077_F 2/5/2026

4.6 CLOSED LOOP SYSTEM THROTTLING (CLST)

The power supply will always assert the SMBAlert# signal whenever temperature-monitored component in the power supply reaches a warning threshold. Upon reduction of the load within 2 msec after the SMBAlert# signal is asserted if the load is reduced to less than the power supply rating; the power supply will continue to operate and not shutdown.

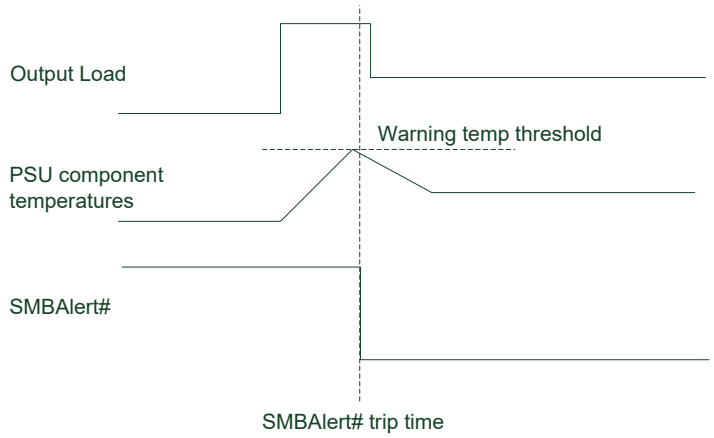

Figure 5. CLST Timing Requirements

4.7 SMART RIDE-THROUGH (SmaRT)

The power supply will assert the SMBAlert# signal < 6 msec after DC input voltage is lost to 0 VDC.

5. CONTROL

The following sections define the input and output signals from the power supply. Signals that can be defined as low true use the following convention: Signal# = low true

5.1 DEVICE ADDRESS LOCATION (B19: A0; B20: A1)

Address Bit 0: A 10 kΩ pull-up resistor pulled to internal +3.3 V in the PSU.
Address Bit 1: A 10 kΩ pull-up resistor pulled to internal +3.3 V in the PSU.

LOCATIONS	PSU#1	PSU#2
PBD addressA1/A0	0/0	0/1
Power supply FRU device	A0h	A2h
Power supply PSMI device	B0h	B2h
Signal type	10 k ohm pull up resistor from +3.3 Vdd device.	
A1 or A0 = low	A1 or A0 address bit = 0	
A1 or A0 = high	A1 or A0 address bit = 1	
	MINIMUM	MAXIMUM
Logic level low voltage	0 V	0.4 V
Logic level high voltage	2.4 V	3.46 V

© 2026 Bel Fuse Inc. BCD.01077_F 2/5/2026

5.2 I2C BUS (A20: SCL; A19: SDA)

Each module shall provide SCL/SDA bus for EEPROM read/write of system. It's pull up from +3.3Vdd device by a 10k ohm resistor. System should have 1k~2k ohm pull high resistor on the SCL/SDA bus. SCL/SDA pin should be link together and closer. The SCL/SDA bus total capacitance must lower 100pF from system and PDB. The max I2C bus speed is 100 kHz and the mcu of PSU is slave device in I2C bus. The time interval of I2C command is 1ms.

5.3 SMBAlert# INDICATE (PIN A22: SMBAlert#)

This is an active low signal and indicates that the power supply is experiencing a problem that the user should investigate. This shall be asserted due to Critical events or Warning events. The signal shall activate in the case of critical component temperature reached a warning threshold, general failure, over-current, over-voltage, under-voltage, failed fan.
This signal may also indicate the power supply is reaching its end of life or is operating in an environment exceeding the specified limits.

This signal is to be asserted in parallel with LED turning solid Amber or blink Amber.

Signal Type (Active Low)	Open collector / drain output from power supply. Pull-up to VSB located in system.	
Alert# = High	OK	
Alert# = Low	Power Alert to system	
	MINIMUM	MAXIMUM
Logic level low voltage, Isink = 4 mA	0 V	0.4 V
Logic level high voltage, Isink = 50 uA		3.46 V
Sink current, Alert# = low		4 mA
Sink current, Alert# = high		50 uA

5.4 PS-ON INPUT SIGNAL (PIN A21: PS-ON)

The PS-ON signal is required to remotely turn on/off the power supply. PSON# is an active low signal that turns on the +12V power rail. When this signal is not pulled low by the system, or left open, the outputs (except the +12VSB) turn off. This signal is pulled to a standby voltage by a pull-up resistor internal to the power supply.

Signal Type	Accepts an open collector/drain input from the system. Pull-up to 3.3VSB located in power supply.	
PSON# = Low	ON	
PSON# = High or Open	OFF	
	MINIMUM	MAXIMUM
Logic level low (power supply ON)	0 V	1.0 V
Logic level high (power supply OFF)	2.0 V	3.46 V
Source current, Vpson = low		4 mA
Power off delay: Tpson_off_delay		5 msec
Power up delay: Tpson_on_delay	5 msec	400 msec
PWOK delay: T pson_pwok		5 msec

5.5 PWOK OUTPUT SIGNAL (PIN A25: PWOK)

PWOK is a power OK signal and will be pulled HIGH by the power supply to indicate that all the outputs are within the regulation limits of the power supply. When any output voltage falls below regulation limits or when DC power has been removed for a time sufficiently long so that power supply operation is no longer guaranteed, PWOK will be de-asserted to a LOW state. See Table: for a representation of the timing characteristics of PWOK. The start of the PWOK delay time shall inhibited as long as any power supply output is in current limit.

© 2026 Bel Fuse Inc. BCD.01077_F 2/5/2026

Signal Type	Open collector/drain output from power supply. Pull-up to VSB located in the power supply.	
PWOK = High	Power OK	
PWOK = Low	Power Not OK	
	MINIMUM	MAXIMUM
Logic level low voltage, Isink = 400 uA	0 V	0.4 V
Logic level high voltage, Isource = 200 A	2.4 V	3.46 V
Sink current, PWOK = low		400 uA
Source current, PWOK = high		2 mA
PWOK delay: Tpwok_on	100 ms	500 ms
PWOK rise and fall time		100 usec

5.6 SMART ON CONTROL (PIN B22: ENABLE BY SYSTEM)

Before enabling Smart On function, make sure pin B22 (SMART ON) on output golden finger of each PSU is connected together. When the pin is HIGH in the Smart On mode, the slave power supply will enter the

Smart Standby mode if system total loading under PSU's pre-set load level. When the pin is LOW in the Smart On mode, the Smart Standby mode power supplies will work in normal redundancy mode. Smart On feature supports 1+1, 2+1, and 3+1 redundant configurations. It uses the Power Management Bus manufacturer specific command area to define Power Management Bus commands for the system to communicate with the power supplies for enabling, configuration, and monitoring.

The Power Management Bus manufacturer specific command MFR_SPECIFIC_00 is used to configure the operating state of the power supply related to Smart On. We will call the command SMART_ON_CONFIG (D0h). Below is the definition of the values used with the Read-Write Byte SMBus protocol with PEC.

COLD REDUNDANCY CONFIG (D0H)		
VALUE	STATE	DESCRIPTION
00h	Standard Redundancy (default power on state)	Turns the power supply ON into standard redundant load sharing more. The power supply make sure no other PSU enter Smart_On mode.
01h	Cold Redundant Active [1]	Defines this power supply to be the one that is always ON in a cold redundancy configuration.
02h	Cold Standby 1 [1]	Defines the power supply that is third to turn off in a Smart On configuration (500ms later) and first to turn on as the load increases.
03h	Cold Standby 2 [1]	Defines the power supply that is second to turn off in a Smart On configuration (600ms later) and second to turn on as the load increases.
04h	Cold Standby 3 [1]	Defines the power supply that is first to turn off in a Smart On configuration (400ms later) and third to turn on as the load increases.

The trigger levels above may have a +/-10% tolerance for actual application. The default state of power supply is in Standard Redundancy mode. Power supply need to be re-specified a state whenever initial power on or the operating module predicts failure. The SMART_ON_CONFIG command will reset to 00h (Standard Redundancy) when any fault happened. And when an active power supply asserts, all parallel power supplies in Smart Standby mode shall power on immediately.

5.6.1 SMART STANDBY POWER SUPPLY OPERATING STATE

A power supply is put into Smart Standby whenever PSON# is asserted, SMART_RED# is de-asserted, and SMART_ON_CONFIG value is set to 02h, 03h, or 04h. In the Smart Standby mode the power supply must.

1. Power ON when Smart_On bus is driven LOW.
2. Keep PWOK asserted.

© 2026 Bel Fuse Inc. BCD.01077_F 2/5/2026

3. No Power Management Bus fault conditions reported via STATUS commands, any fault happen will made PSU leave smart standby mode.
4. Keep all fans rolling
5. LED is green blinking under normal conditions, amber blinking if any warning conditions happen.

5.6.2 POWERING ON SMART STANDBY SUPPLIES TO MAINTAIN BEST EFFICIENCY

Power supplies in Smart Standby state shall monitor the shared voltage level of the load share signal to sense when it needs to power on. Depending upon which position (1, 2, or 3) the system defines that power supply to be in the Smart Standby configuration; will slightly change the load share threshold that the power supply shall power on at.

5.6.3 POWERING ON SMART STANDBY SUPPLIES DURING A FAULT OR OVER CURRENT CONDITION

Some warnings happen or 12V output shutdown due to any fault will cause SRED_OK# driven low.When an active power supply asserts its SRED_OK# signal, all parallel power supplies in Smart Standby mode shall power on immediately.

The trigger condition:

1. 12V OC warning/ fault happens
2. 12V OVP fault
3. 12V Smart ON UVP (lower than 11.8V)
4. OTP fault
5. Fan speed fault
6. DC loss
7. Send 00h to PMBus D0h command
8. PSON# de-assertion happens

5.6.4 THE WAY TO ENABLE SMATR ON FUNCTION

Here are the steps to put PSU into smart on mode. PSU which is assigned as smart on standby can operate in a power-off state and turn on main power if necessary.

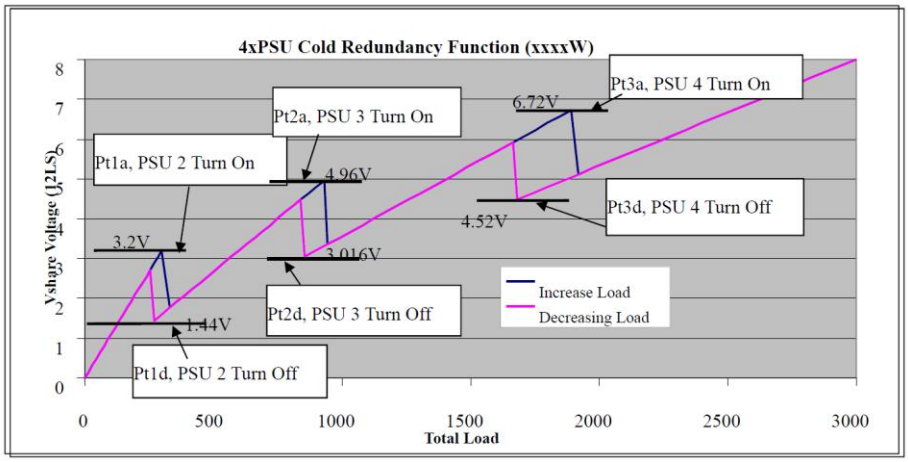

Figure 6. Power On/Off of power supplies in Smart on Mode (4xxxxW PSUs)

5.7 PRESENT_N# (PIN B24, OPTIONAL)

This signal is an active low type signal and is connected to the power supply's output ground internally. The mating pin of this signal in system side should have a pull-up resistor which limit the max. current 4 mA to go through from this signal pin to the power supply. A Low state on this signal indicates the PSU is physically presents.

© 2026 Bel Fuse Inc. BCD.01077_F 2/5/2026

5.8 VIN_GOOD (Pin B25)

This signal is an output to indicate AC power is existence and is within operation range. It should act from high to low level within 4 ms only for Vin drops out to zero and input voltage brown-out events. The 4 mS timing is defined as Vin = 0 to Vin_GOOD signal low level.

SIGNAL TYPE PULL-UP 1KΩ TO INTERNAL 3.3 V LOCATED IN POWER SUPPLY		
V_{IN_GOOD} = High	Input voltage is in operating range	
V_{IN_GOOD} = Low	Input voltage is out of operating range	
	MIN	MAX
Logical Level Low, I_{SINK} = 4 mA	0 V	0.4 V
Logical Level High, I_{SOURCE} = 50 µA	2.4 V	3.46 V
Sink current, V_{IN_GOOD} = low		4 mA
Source current, V_{IN_GOOD} = high		50 µA
V_{IN_GOOD} rise and fall time		400 µs

6. ELECTROMAGNETIC COMPATIBILITY

6.1 IMMUNITY

The power supply shall comply with EN 55024.

PARAMETER	DESCRIPTION / CONDITION	CRITERION
Electrostatic Discharge	IEC / EN 61000-4-2 (8 kV contact discharge; 15 kV air discharge)	B
Radiated Immunity	IEC / EN 61000-4-3	A
Fast Transient / Burst	IEC / EN 61000-4-4 (0.5 kV DC input lines)	B
Surge Immunity	IEC / EN 61000-4-5 (Line to Earth: 0.5 kV; Line to Line: 0.5 kV)	A
Conducted Susceptibility	IEC / EN 61000-4-6	A
Power Frequency Magnetic Field	EN 61000-4-8	N/A
Voltage Dips and Interruptions	IEC / EN 61000-4-11	B

6.2 EMISSION

PARAMETER	DESCRIPTION / CONDITION	CRITERION
Conducted & Radiated Emissions	EN 55032 / CISPR 32	Class A 6 dB margin
Harmonic Current	IEC 61000-3-2	
Voltage Fluctuation and Flicker	IEC 61000-3-3	Class A

© 2026 Bel Fuse Inc. BCD.01077_F 2/5/2026

7. SAFETY / APPROVALS

PARAMETER	DESCRIPTION / CONDITION	NOTES
Agency Approvals	• UL/CSA 62368-1 (USA / Canada) • EN/IEC 62368-1 (Europe / International) • CB Certificate & Report, IEC 62368-1 (Report to include all country national deviations)) • CE – Low Voltage Directive 2006/95/EC (Europe) • Nordics -EMKO-TSE (74-SEC) 207/94 • GB4943- CNCA Certification (China)	
Leakage Current	Max. 3.5 mA at -48 VDC	

8. ENVIRONMENTAL

PARAMETER	DESCRIPTION / CONDITION	MIN	NOM	MAX	UNIT
Ambient Temperature	Operating	0		+50	°C
	Non-Operating	-40		+70	
Power de-rating Temperature	Operating (For details, please refer to section 3.1)	+50		+65	°C
Humidity	Operating, relative (non-condensing)	5		85	%
	Non-Operating, relative (non-condensing)	5		95	
Altitude	Operating (Max. ambient air temperature 45°C)	0		15200	feet
	Non-Operating	0		50000	feet
Mechanical Shock (non-operating)	50 G Trapezoidal Wave, Velocity change = 170 in. / sec				
Vibration (non-operating) sinusoidal	1.5G, pk-pk, 10 Hz-500 Hz–10 Hz, 0.5 octave/min; 2 sweeps per axis				
Vibration, (non-operating) random	2 Grms, 10 Hz-500 Hz, 60 mins per axis				
Thermal Shock (non-operating)	50 cycles, 30°C/min. ≧ transition time ≧ 15°C/min	-40		+70	°C
Acoustic Noise	100% rated DC load, inlet T_A = 25°C			70	dB

9. RELIABILITY

PARAMETER	DESCRIPTION / CONDITION	MIN	NOM	MAX	UNIT
Mean time between failures (MTBF)	T_A = 25°C, 80% load, according Telcordia SR-332	100			kh

10. MECHANICAL

PARAMETER	DESCRIPTION / CONDITION	MIN	NOM	MAX	UNIT
Dimensions (W x H x L)			73.5 x 40.0 x 185		mm
			2.89 x 1.57 x 7.28		in
Weight			740		g

© 2026 Bel Fuse Inc. BCD.01077_F 2/5/2026

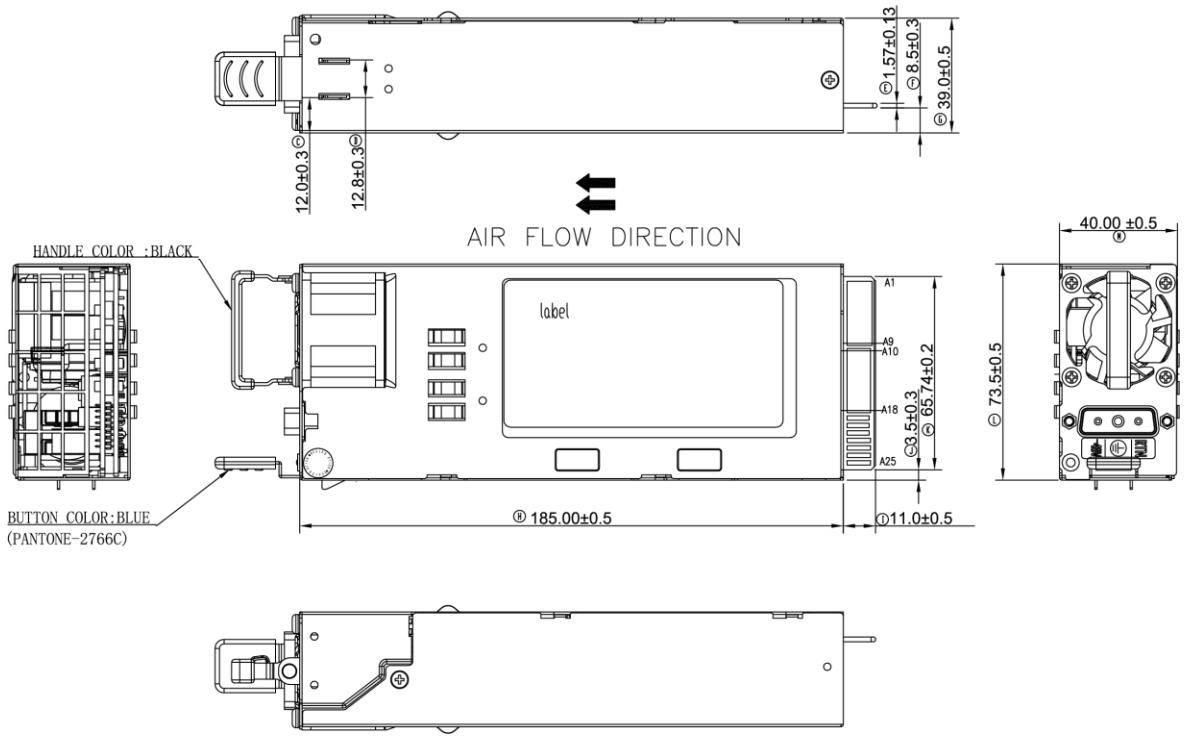

Figure 7. Mechanical Drawing

10.1 AIRFLOW DIRECTION

The **normal airflow** direction is from the card edge connector side to the DC IN inlet side of the power supply. The **reverse airflow** direction flows from the DC inlet side of the power supply to the card edge connector side (Fan out & forward Fan).

10.2 HANDLE RETENTION

The power supply has a handle to assist extraction. The module can be inserted and extracted without the assistance of tools. The power supply has a latch which retains the power supply into the system and prevents the power supply from being inserted or extracted from the system when the AC power cord is pulled into the power supply.
The handle protects the operator from any burn hazard through the use of the Customer Corporation Industrial designed plastic handle.

10.3 LED MARKING AND IDENTIFICATION

The power supply has a single bi-colored LED for indication of the power supply status. Green & Amber.

POWER SUPPLY CONDITION	LED STATE
Output ON and OK	GREEN
No DCIN power to all power supplies	OFF
DCIN present / Only 12 VSB on (PS off) or PS in Smart on state	1 Hz Blink GREEN
DCIN cord unplugged or DCIN power lost; with a second power supply in parallel still with DC input power.	AMBER
Power supply warning events where the power supply continues to operate; high temp, high power, high current, slow fan.	1 Hz Blink Amber
Power supply critical event causing a shutdown; failure, OCP, OVP, Fan Fail	AMBER
Power supply FW updating	2 Hz Blink GREEN

© 2026 Bel Fuse Inc. BCD.01077_F 2/5/2026

11. CONNECTORS

11.1 DC INLET CONNECTOR

The 48 V input power is supplied via a standard pluggable terminal block connector.
The DC input connector is PR-S-XA-3V3P000-Model power inlet. The input polarity is defined in Figure 7.

Mating input connector: Amphenol FCE17-A3M3SM-2N2, wire size 8 AWG or above. Other equivalent parts are acceptable.

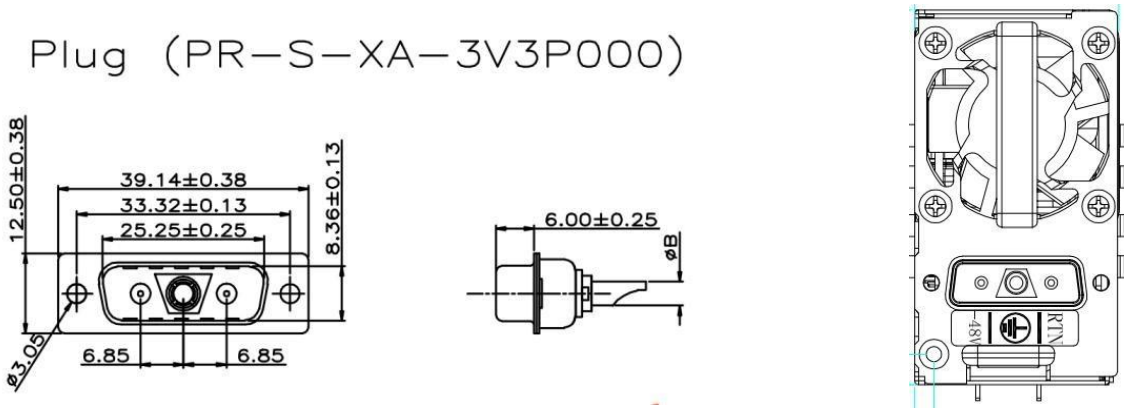

Figure 8. DC inlet connector PR-S-XA-3V3P000

Figure 9. Input polarity marking

11.2 DC OUTPUT CONNECTOR PIN LOCATIONS

The power supply uses a card edge output connection for power and signal that is compatible with a 2x25 Power Card Edge connector (equivalent to 2x25 pin configuration of the FCI power card connector 10035388102LF).

PIN-OUT	DEFINITION	PIN-OUT	DEFINITION
A1-9	GND	B1-9	GND
A10-18	+12V	B10-18	+12V
A19	Power Management Bus SDA	B19	A0 (SMBus address)
A20	Power Management Bus SCL	B20	A1 (SMBus address)
A21	PSON	B21	$+12V_{SB}$
A22	SMBAlert#	B22	SMART_ON
A23	Return Sense (Remote sense-)	B23	+12V Load Share Bus
A24	+12V Remote Sense (Remote sense+)	B24	PRESENT# (Reserved)
A25	PWOK	B25	VIN_GOOD

Note: B25 is optional signal for PS_KILL or Vin_good;

© 2026 Bel Fuse Inc. BCD.01077_F 2/5/2026

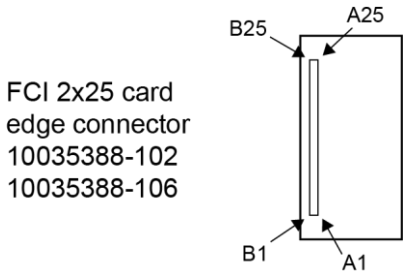

Figure 10. Back DC output golden finger port

For more information on these products consult: powersupport@belf.com

NUCLEAR AND MEDICAL APPLICATIONS - Products are not designed or intended for use as critical components in life support systems, equipment used in hazardous environments, or nuclear control systems.
TECHNICAL REVISIONS - The appearance of products, including safety agency certifications pictured on labels, may change depending on the date manufactured. Specifications are subject to change without notice.

POWER | PROTECT | CONNECT

Asia-Pacific
+86 755 2988 5888

EMEA
+353 61 531 820

North America
+1 408 513 2839

powersupport@belf.com
belfuse.com

© 2026 Bel Fuse Inc. BCD.01077_F 2/5/2026