350DNG40-12-8

2nd Generation DC-DC Down Converter

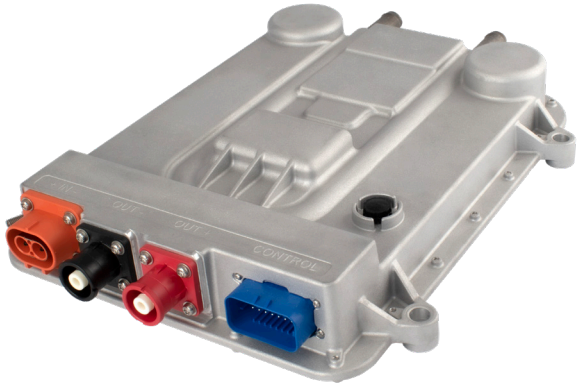

The Bel Power Solutions 350DNG40-12-8 is a 2nd generation 4 kW liquid cooled DC-DC converter that creates DC voltages in hybrid and electric vehicles suitable to power low voltage accessories.

350DNG40-12-8 converter operates at input voltages from 240 to 450 VDC and delivers up to 4000 W of output power.

Features include very high efficiency, high reliability, low output voltage noise, and excellent dynamic response to load/input changes.

FEATURES

- Very high efficiency up to 94 %
- Input voltage range: 240 – 450 VDC
- Output power up to 4 kW
- Parallelable up to 8 unit
- Full galvanic isolation between input and output
- Liquid cooled
- CAN bus serial interface
- Optional UDS functionality, CAN FD & Cyber security
- Adjustable output voltage and over current protection
- Over temperature, output over voltage and over current protection, input and output reverse polarity protection
- IP rating IP67 & IP6K9K
- E-Mark compliant

APPLICATIONS

- Construction equipment
- Mining applications (underground)
- Ground support equipment
- On- and Off-Highway vehicles
- Marine equipment

1. MODEL SELECTION

MODEL	DESCRIPTION
350DNG40-12-8	12 VDC, 4 kW, liquid cooled DC-DC down converter
DNG40-CON-KIT-12	Mating connector kit: 1 pc Signal connector (housing and pins - spare parts) 1 pc HV connector (housing and pins - spare parts) 2 pcs LV connectors (black and red)

2. INPUT SPECIFICATIONS

PARAMETER	DESCRIPTION / CONDITIONS	MIN	NOM	MAX	UNIT
Input Voltage		240	350	450	VDC
Input Current				19	ADC
Efficiency	at V_{IN} = 350 VDC, V_O = 14.4 V, I_O = 278 A,	93			%
Input Line Interruption	Converter shutdown			230	VDC
Input Capacitance			30		µF
Inrush Current	External pre-charging circuit required				

3. OUTPUT SPECIFICATIONS

PARAMETER	DESCRIPTION / CONDITIONS	MIN	NOM	MAX	UNIT
Output Voltage	V_O to be trimmed via CAN BUS, 10 bit resolution	10	14.4	15	VDC
Output Current	@ 14.4 VDC		278		ADC
Output Power				4000	W
Line Regulation	$V_{IN\ MIN}$ - $V_{IN\ MAX}$, @ 70 A, T_{AMB} = 65°C	-0.14		+0.14	VDC
Load Regulation/Drop	I_{OUT} 10 to 90% load, $T_{COOLANT}$ = 65°C		0.6		VDC
Output Voltage Set Point	@ 139 A, $T_{COOLANT}$ = 25°C	14.33	14.4	14.47	VDC
Thermal Drift		-0.1		+0.1	%/°C
Periodic & Random Deviation	@ 14.4 VDC / Nominal load (Differential Mode 20 MHz) CAN high / low (Differential Mode 20 MHz)			280 300	mV_{P-P}
Transient Response	Voltage over/under shoot: Load step 1: 10 to 50 %, 50 to 100% and back Load step 2: 50 to 100 % and back Response time within 1 % of $V_{O\ SET}$	 -1.4 -2.8		 +1.4 +2.8 5	 V V ms
Turn-on Overshoot	$V_{O\ NOM}$, < 5 ms			1	%
Redundant Parallel Operation	Up to 8 converters operating in parallel			32	kW
Remote Sense	Cable Drop (V) @ Maximum Load			0.5	V
Turn-On Delay	Rise time (Cext = 0 µF) Power-on-delay (CAN command			500 3	ms s
Turn-Off Timing	PS_WAKEUP delay; (monotonic V_O fall)			0.5	s

© 2025 Bel Fuse Inc.

4. PROTECTION SPECIFICATIONS

PARAMETER	DESCRIPTION / CONDITIONS	MIN	NOM	MAX	UNIT
Output Over Current Protection	Adjustable via CAN (Default factory set point 283 A)	100		283	A
Output Over Voltage Protection	Latch type, max. OV duration 1 ms		18		V
Output Under Voltage Protection	Max. UV duration 1s, then hiccup		5		V
Output Reverse Polarity Protection	Protective elements connected in series				
Over Temperature Protection	Converter shutdown at T_coolant	90			°C
HV Input Fuse Protection	DC Input: external HV fuse recommended (Bel EV fuse PN: 0AKLx9250-xx, fast characteristic)		25		A
Input Low Line Protection	5 V hysteresis		235		VDC
Input Over Voltage Protection	5 V hysteresis		455		V

5. MONITORING AND CONTROL SIGNALS

PARAMETER	DESCRIPTION / CONDITIONS	CRITERION
CAN BUS SAE J1939	250 kBit/s, 500 kBit/s or 1Mbit/s available	
Remote Sense Signals	Sense positive (+12 V SENSE) Sense negative (-12 V SENSE)	0.5 V compensation
Address Bits	ADDR 0, 1	Logic Low / Floating/High
PS_WAKEUP	Logic input signal	LV BAT VOLTAGE
HVIL Function	HVIL loop monitored internally	HVIL voltage / current
CAN_BAUD_IN	CAN baud rate select input	Open = 500 kbps +VBAT = 250 kbps GND = user specific (EEPROM)

6. ENVIRONMENTAL SPECIFICATIONS

PARAMETER	DESCRIPTION / CONDITIONS	MIN	NOM	MAX	UNIT
Operating Temperature	T_coolant / ambient with no derating T_coolant / ambient with power derating at 3000 W	-40		+65 +85	°C
Storage Temperature		-40		+95	°C
Altitude	Operating Non-Operating			4000 12200	m
Humidity	SAE J1455 and IEC 60068-2-78				
Shock	GMW-3172				
Vibration	ISO 16750-3:2012				
IP Rating	IP67, IP6K9K				

7. COOLING SPECIFICATIONS

PARAMETER	DESCRIPTION / CONDITIONS
Maximum Inlet Coolant Temperature	+65°C or up to +85°C with reduced output power
Coolant Medium/Mixture	50/50 Propylene or Ethylene Glycol/Water
Min. Coolant Flow	2.64 GPM (10 LPM)
Max. Coolant Flow	5.28 GPM (20 LPM)
Max. Coolant Pressure	29 psi / 2 bar
Max. Pressure Drop	0.8 psi / 0.05 bar

© 2025 Bel Fuse Inc.

8. SAFETY, REGULATORY AND EMI SPECIFICATIONS

PARAMETER	DESCRIPTION / CONDITIONS	CLASS / LEVEL / CRITERION
EMI	E-Mark compliant - UN ECE R10 Rev. 6	ESA level
Radiated Emission	UN ECE R10 Rev. 6	ESA level
Electrostatic Discharge	IEC 61000-4-2	Performance Criterion B
Radiated Electromagnetic Field	IEC 61000-4-3 (10 V/m) SAE J1113/21 (100 V/m)	Performance Criterion B Class B
Electrical Fast Transient	IEC 61000-4-4, Level 2 (±2 kV, 2.5 kHz) ISO 7637-2; ISO 7637-3, ISO 16750-2	Performance Criterion B
RF Conducted Immunity	Level 3 (10 V, 0.15…80 MHz, AM 80%, 1kHz)	Performance Criterion A
RF Disturbances Immunity	SAE J1113-41 ISO 11452-4 BCI (1-400 MHz, 60 mA)	Class A Class A
Staring Profile	ISO 16750-2:2012	Performance Criterion B
Load Dump	ISO 16750-2:2012	Performance Criterion C
Insulation	Input to Protective Earth Input to Output Output and Signals to Protective Earth Signals to Output	Basic 2677 VDC Reinforced 4000 VDC Basic 500 VDC Basic 100 VDC

9. CONNECTORS

9.1 HV DC INPUT

Converter side: MFG: AMPHENOL; PN: ELR2A02
Mating connector: MFG: AMPHENOL; PN: ELP2A02

Use copper conductors only with an insulation rating of 120°C, 4 mm^2

Follow connector MFG instructions for correct connector assembly.

Note: HVIL pins shall be shorted on mating part.

PIN	FUNCTION
1	HV DC positive
2	HV DC negative
A	HVIL
B	HVIL

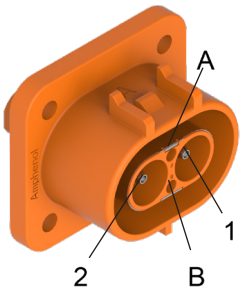

Figure 1. HV input connector, Converter side

Figure 2. HV input connector, Cable side

9.2 LV DC OUTPUT

Converter side: MFG: Amphenol; PN: SLPIRCBPSB1
SLPIRCBPSR1
Mating connector: MFG: Amphenol; PN: SLPPC85BSB1
SLPPC85BSR1

Use copper conductors only with an insulation rating of 120°C, 95 mm^2
Follow connector MFG instructions for correct connector assembly.

CONNECTOR	FUNCTION
RED	LV DC positive
BLACK	LV DC negative

Figure 3. DC output connector, Converter side

Figure 4. DC output connector, Cable side

© 2025 Bel Fuse Inc.

9.3 SIGNAL CONNECTOR

Converter side: MFG: TE Connectivity; PN: 1-776087-5
Mating connector: MFG: TE Connectivity; PN: 770680-5
Pin MFG: TE Connectivity; PN: 770520-1
Max. 2 Amps per pin (wire AWG 20)
It is recommended to use shielded connecting cables.

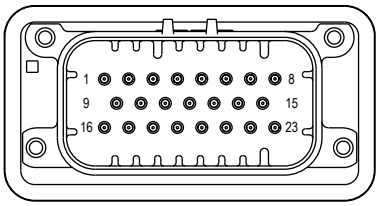

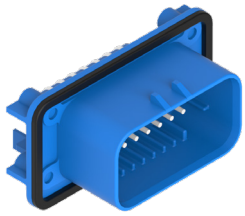

Figure 5. Signal connector, Converter side

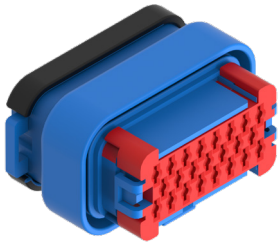

Figure 6. Signal connector, Cable side

PIN	NAME	FUNCTION	
1	ADDR_0	Address bit 0 input	Open = add 0 x 01 to base address +VBAT = add 0 x 02 to base address GND = add 0 x 03 to base address
2	WAKE_UP	KL15 wake-up input, parallel with pin 17	
3	CAN_L	CAN Bus L, parallel with pin 18	
4	CAN_H	CAN Bus H, parallel with pin 19	
5	GND	KL31, auxiliary supply ground	
6	+VBAT	KL30 +12/24V for auxiliary supply	
7	HVIL_IN	HVIL loop input	
8	HVIL_OUT	HVIL loop output	
9	ADDR_1	Address bit 1 input	Open = add 0 x 00 to base address +VBAT = add 0 x 03 to base address GND = add 0 x 06 to base address
10	GPI	General purpose analog input	
11	CAN_BAUD_IN	CAN baud rate select input	Open = 500 kbps +VBAT = 250 kbps GND = user specific (EEPROM)
12	GND	KL31, auxiliary supply ground	
13	+VBAT	KL30 +12/24V for auxiliary supply	
14	SENSE+	Sense wire – positive polarity	
15	SENSE+	Sense wire – positive polarity	
16	GP_OUT	General purpose output	
17	WAKE_UP	KL15 wake-up input, parallel with pin 2	
18	CAN_L	CAN Bus L, parallel with pin 3	
19	CAN_H	CAN Bus H, parallel with pin 4	
20	GND	KL31, auxiliary supply ground	
21	+VBAT	KL30 +12/24 V for auxiliary supply	
22	SENSE -	Sense wire – negative polarity	
23	SENSE -	Sense wire – negative polarity	

© 2025 Bel Fuse Inc.

10. MECHANICAL SPECIFICATIONS

PARAMETER	DESCRIPTION / CONDITIONS	MIN	NOM	MAX	UNIT
Dimensions	W x H x D		284 x 55 x 356 11.18 x 2.16 x 14.01		mm in
Weight			4.5		kg
Enclosure	Aluminum alloy				

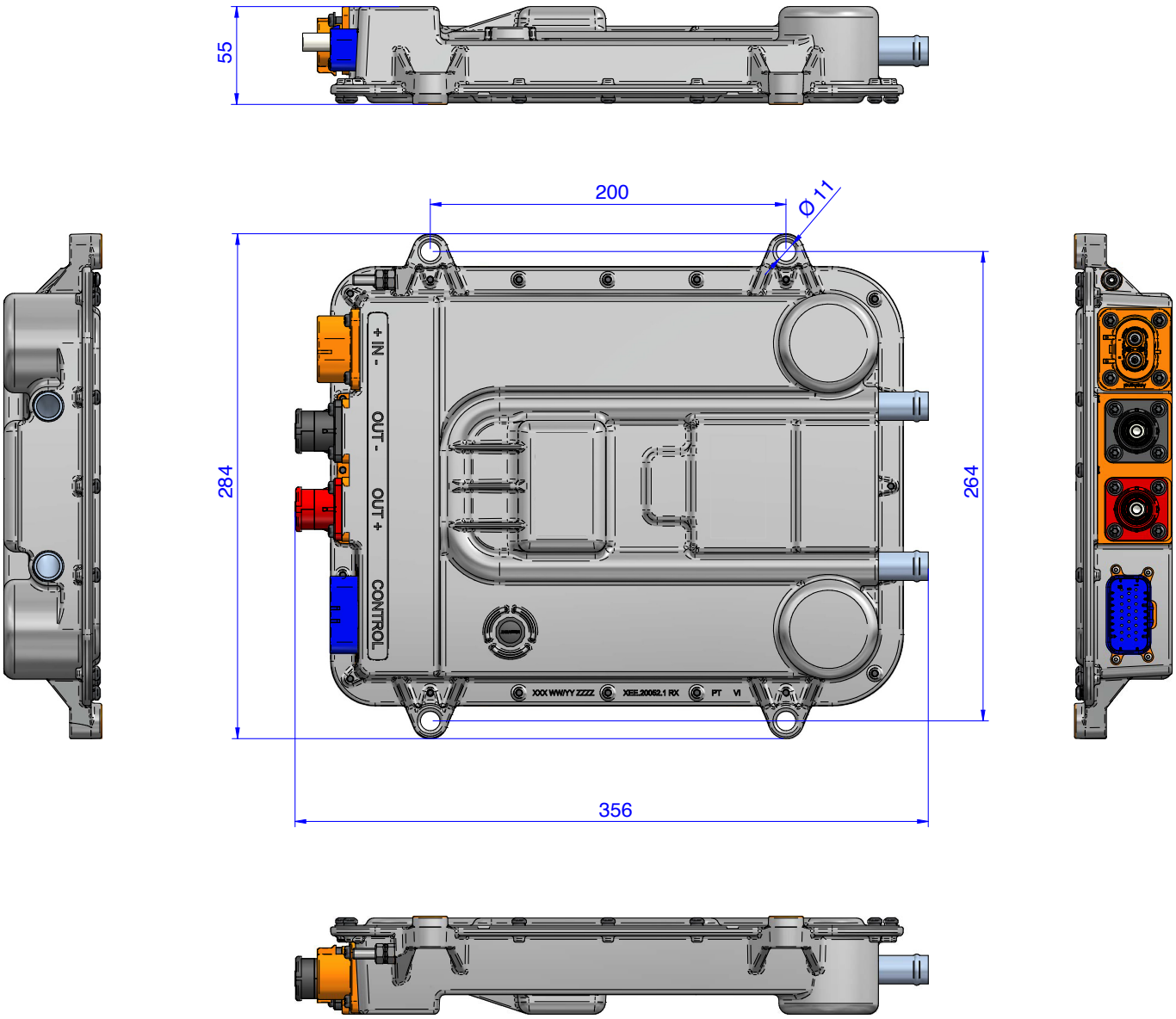

Figure 7. Mechanical Drawing

For more information on these products consult: powersupport@belf.com

NUCLEAR AND MEDICAL APPLICATIONS - Products are not designed or intended for use as critical components in life support systems, equipment used in hazardous environments, or nuclear control systems.

TECHNICAL REVISIONS - The appearance of products, including safety agency certifications pictured on labels, may change depending on the date manufactured. Specifications are subject to change without notice.

POWER | PROTECT | CONNECT

Asia-Pacific +86 755 2988 5888
EMEA +353 61 531 820
North America +1 866 513 2839

powersupport@belf.com
belfuse.com

© 2025 Bel Fuse Inc.