SERIES: 18 ~ 36 W DESK-TOP **DESCRIPTION:** LEAD ACID BATTERY CHARGER

FEATURES

- short circuit protection
- reverse polarity protection
- LED indicator
- UL 60950 approved
- meets FCC class B EMI standard
- designed for optimum lead acid battery charging



RoHS

Discontinued

MODEL

MODEL	output voltage	output current		output wattage
	nominal (V dc)	min (A)	max (A)	max (W)
DTB120150UC	12	0	1.5	18
DTB120225UC	12	0	2.25	26.4
DTB120300UC	12	0	3	36
DTB240080UC	24	0	0.8	19.2
DTB240125UC	24	0	1.25	30
DTB240150UC	24	0	1.5	36

PART NUMBER KEY

DTB120125UC -PXXX- FL - CXX

- Base Number (example of 12 V dc, 1.25 A)
- DC Plug type: see output plug options on page 6
- Factory Designation
- Reserved for custom configurations

Please read our datasheet & drawing disclaimer here.

SERIES: 18 ~ 36 W DESK-TOP **DESCRIPTION: LEAD ACID BATTERY CHARGER**

INPUT

parameter	conditions/description	min	nom	max	units
rated input voltage		100		240	V ac
frequency range		47		63	Hz
rated input current				1.5	A
inrush current	120 V ac, cold start, 25˚C			10	A

OUTPUT

parameter	conditions/description		min	nom	max	units
fast charge	output curent	DTB120125	1.3	1.5	1.7	A
(CC mode)		DTB120225	2.05	2.25	2.45	A
LED: red		DTB120300	2.7	3	3.3	A
		DTB240080	0.65	0.8	0.95	A
		DTB240125	1.05	1.25	1.45	A
		DTB240150	1.3	1.5	1.7	A
	output voltage	12 V			14.7	V dc
		24 V			29	V dc
continuous charge	output current	DTB120125	0.55	0.75	0.95	A
(CC & CV mode)		DTB120225	0.8	1	1.2	A
LED: red		DTB120300	1.2	1.5	1.8	A
		DTB240080	0.25	0.4	0.55	A
		DTB240125	0.4	0.6	0.8	A
		DTB240150	0.55	0.75	0.95	A
	output voltage	12 V	14.3	14.5	14.7	V dc
		24 V	28.5	28.8	29.1	V dc
stand-by charge	output current	DTB120125			0.75	A
(CC mode)		DTB120225			1	A
LED: green		DTB120300			1.5	A
		DTB240080			0.4	A
		DTB240125			0.6	A
		DTB240150			0.75	A
	output voltage	12 V	13.5	13.7	13.9	V dc
		24 V	27.1	27.4	27.7	V dc
open state	output current	DTB120125		0		A
(CV mode)		DTB120225		0		A
LED: green		DTB120300		0		A
		DTB240080		0		A
		DTB240125		0		A
		DTB240150		0		A
	output voltage	12 V	13.5	13.7	13.9	V dc
		24 V	27.1	27.4	27.7	V dc

CC: continue current, CV: continue voltage

Discontinued

CHARGE

parameter	conditions/description	min	nom	max	units
reverse polarity protection					
short circuit protection	auto recovery				
reverse current				5	mA
battery type	charger is good for lead acid battery				

SERIES: 18 ~ 36 W DESK-TOP **DESCRIPTION: LEAD ACID BATTERY CHARGER**

SAFETY & EMI

parameter	conditions/description	min	nom	max	units
HI-POT	input to output at 5 mA for 1 minute input to output at 5 mA for 1 minute			3,000 4,242	V ac V dc
safety approvals	UL/cUL, CE				
EMI standard	FCC class B				
warranty*	standard warranty length			6	months

ENVIRONMENTAL

parameter	conditions/description	min	nom	max	units
operating temperature		0		40	°C
relative humidity		8		95	%
storage temperature		-40		70	°C

Discontinued

* CUI products are warranted against defect in materials and workmanship. This warranty does not cover damage or wear resulting from accident, misuse, or unauthorized adjustment, modification, or repair. In the event of a defect covered by this warranty, CUI, at its option, will provide repair, replacement, or credit for products that are defective within the warranty period.

SERIES: 18 ~ 36 W DESK-TOP **DESCRIPTION: LEAD ACID BATTERY CHARGER**

MECHANICAL DRAWING (DTB2120150, DTB240080)

ac socket	IEC320/C8
dc cord	UL2468, AWG 24#*2C, black, 1.8 meter with dc connector
case	115 L x 48 W x 31.5 H mm, tolerance: ±1 mm

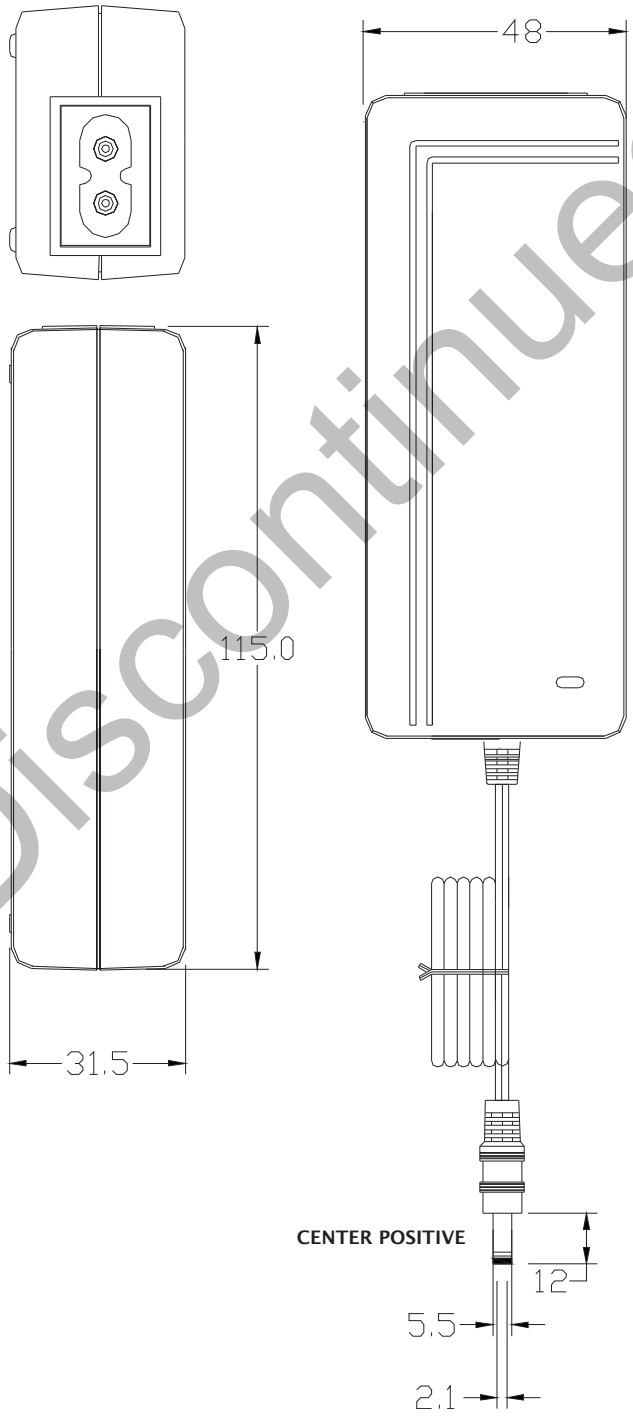

Discontinued

SERIES: 18 ~ 36 W DESK-TOP **DESCRIPTION: LEAD ACID BATTERY CHARGER**

MECHANICAL DRAWING (all other models)

ac socket	IEC320
ac cord	SVT AWG 18*3C, UL 3PIN, 1.8 meter
dc cord	UL2468, AWG 20#*2C, black, 1.8 meter with dc connector
case	118 L x 60 W x 37.5 H mm, tolerance: ±1 mm

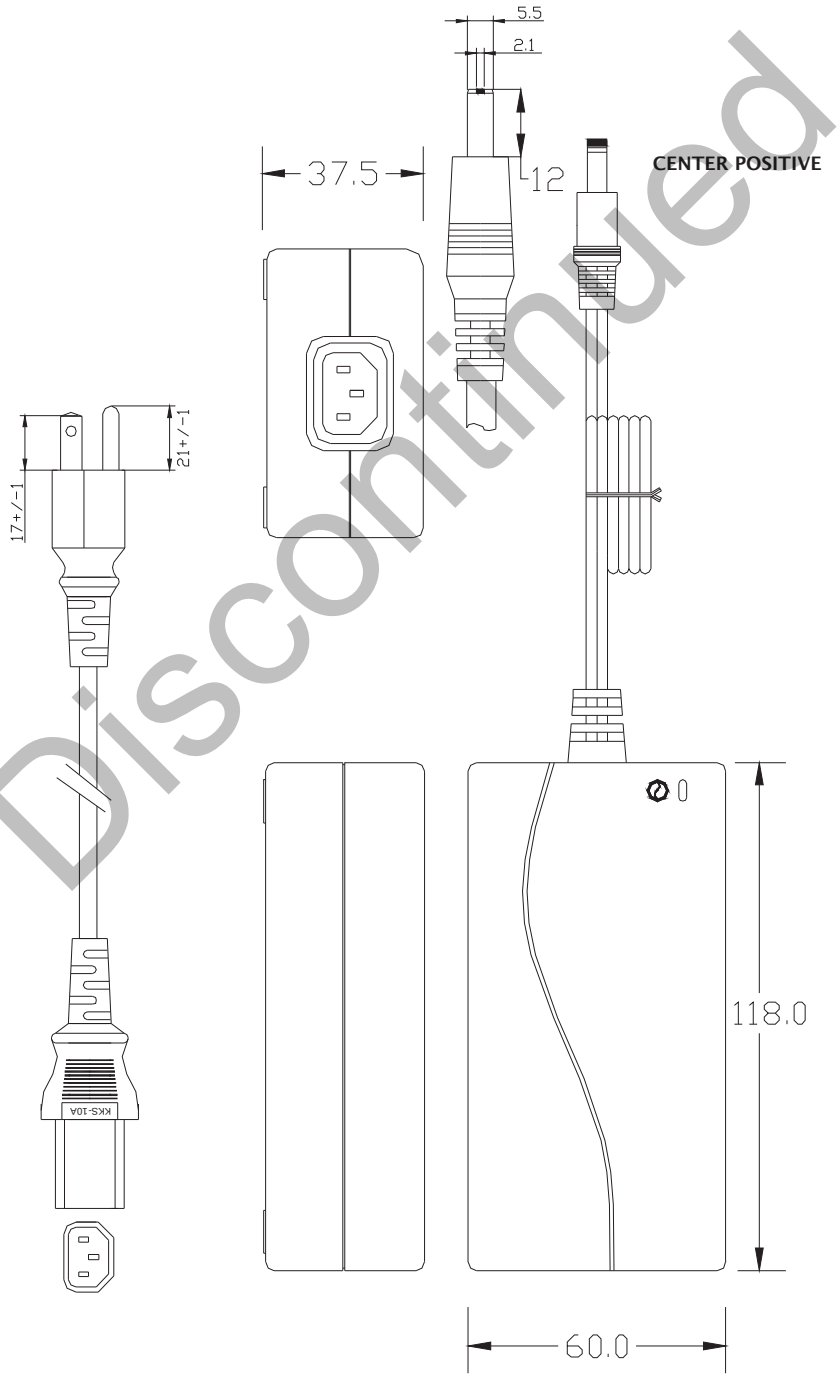

Discontinued

SERIES: 18 ~ 36 W DESK-TOP **DESCRIPTION: LEAD ACID BATTERY CHARGER**

OUTPUT PLUG OPTIONS

Standard DC Plug

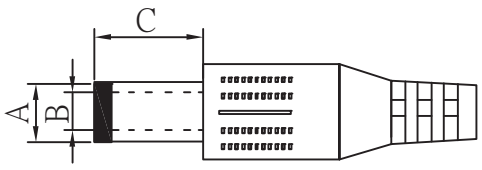

Standard PX

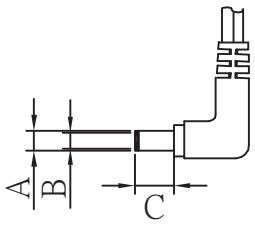

Right Angle PXR

	A	B	C	Unit
P5/P5R	5.5	2.1	12	mm
P6/P6R	5.5	2.5	12	mm
P7/P7R	3.5	1.3	10	mm
P8/P8R	3.8	1.35	10	mm
P9/P9R	3.8	1.05	10	mm

Locking DC Plug

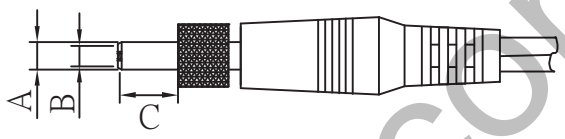

	A	B	C	Unit
P10	5.5	2.1	12	mm
P11	5.5	2.5	12	mm

EIAJ Plugs

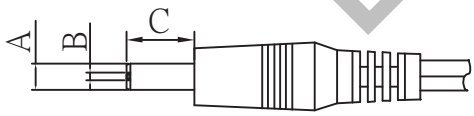

Standard PXX

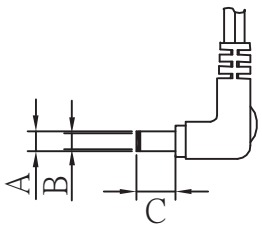

Right Angle PXXR

	EIAJ	A	B	C	Unit
P12/P12R	EIAJ-1	2.35	0.7	10	mm
P13/P13R	EIAJ-2	4.0	1.7	9.5	mm
P14/P14R	EIAJ-3	4.75	1.7	9.5	mm

Add suffix “P” for center positive: PXX**P**



Add suffix “N” for center negative: PXX**N**



***Contact CUI for additional output plug options.**

Discontinued