SERIES: VYB15W-T | DESCRIPTION: DC-DC CONVERTER

DISCONTINUED

FEATURES

- chassis mount with screw terminal connectors
- up to 15 W output
- compact size
- 4:1 input range (9 ~ 36 V, 18 ~ 75 V)
- single and dual outputs
- 1,500 V isolation
- short circuit, over current, and over voltage protections
- wide temperature operation (-40 ~ 85°C)
- efficiency up to 87%



RoHS

MODEL

MODEL	input voltage range (Vdc)	output voltage (Vdc)	output current min (mA)	output current max (mA)	output power max (W)	ripple[1] max (mVp-p)	noise[1] max (mVp-p)	efficiency typ (%)
VYB15W-Q24-S3-T	9 ~ 36	3.3	400	4,000	13.2	150	150	80
VYB15W-Q24-S5-T	9 ~ 36	5	300	3,000	15	150	150	82
VYB15W-Q24-S12-T	9 ~ 36	12	125	1,250	15	150	150	85
VYB15W-Q24-S15-T	9 ~ 36	15	100	1,000	15	150	150	85
VYB15W-Q24-D5-T	9 ~ 36	±5	±150	±1,500	15	50	100	86
VYB15W-Q24-D12-T	9 ~ 36	±12	±63	±625	15	50	100	87
VYB15W-Q24-D15-T	9 ~ 36	±15	±50	±500	15	50	100	87
VYB15W-Q48-S3-T	18 ~ 75	3.3	400	4,000	13.2	150	150	81
VYB15W-Q48-S5-T	18 ~ 75	5	300	3,000	15	150	150	83
VYB15W-Q48-S12-T	18 ~ 75	12	125	1,250	15	150	150	85
VYB15W-Q48-S15-T	18 ~ 75	15	100	1,000	15	150	150	85
VYB15W-Q48-D5-T	18 ~ 75	±5	±150	±1,500	15	50	100	84
VYB15W-Q48-D12-T	18 ~ 75	±12	±63	±625	15	50	100	87
VYB15W-Q48-D15-T	18 ~ 75	±15	±50	±500	15	50	100	87

Notes: 1. Ripple and noise are measured at 20 MHz BW with 10µF tantalum capacitor and 1µF ceramic capacitor across output

PART NUMBER KEY

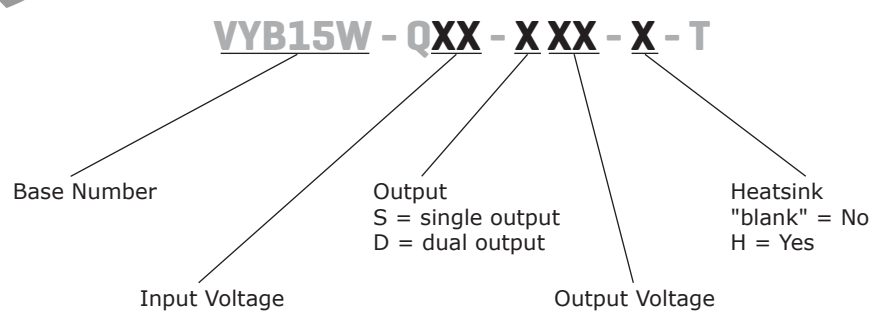

Please read our datasheet & drawing disclaimer here.

INPUT

parameter	conditions/description		min	typ	max	units
operating input voltage			9 18	24 48	36 75	Vdc Vdc
start-up time				10		ms
under voltage lockout	dual output models	power up 24 V input			9.0	Vdc
		power up 48 V input			17.8	Vdc
		power down 24V	7.8			Vdc
	dual output models	power down 24 V input	16.0			Vdc
		power down 48 V input				
Remote on/off[1]	all models	module off	0		1.2	Vdc
	single output models	module on (or open circuit)	3.5		40	Vdc
	dual output models	module on (or open circuit)	3.5		12	Vdc
filter	single output models, LC dual output models, PI type					

Notes: 1. The on/off pin voltage is referenced to GND

OUTPUT

parameter	conditions/description		min	typ	max	units
line regulation	measured from low line to high line			±0.2	±0.5	%
load regulation	measured from 10% to full load			±0.5	±1	%
voltage accuracy	refer to recommended circuit			±1	±3	%
transient recovery time	25% step load charge			200	500	µs
transient peak deviation	single output models			±2	±5	%
	dual output models	25% rated load		±3	±5	%
cross regulation	dual output models	main output 55%, supplemental output from 10~100% load			±5	%
adjustability	single output models			±10%		Vdc
switching frequency	100% load, input voltage range					
	single output models			300		kHz
	dual output models			400		kHz
temperature coefficient				±0.02		%/°C

PROTECTIONS

parameter	conditions/description		min	typ	max	units
short circuit protection	hiccups, continuous, automatic recovery					
over current protection	single output models	input voltage range	120	130	150	%
	dual output models	input voltage range	120	140	150	%
over voltage protection	single output models	3.3 V		3.9		Vdc
		5 V		6.2		Vdc
		12 V		15		Vdc
		15 V		18		Vdc
	dual output models	±5 V		±6.1		Vdc
		±12 V		±15		Vdc
		±15 V		±18		Vdc

DISCONTINUED

SAFETY AND COMPLIANCE

parameter	conditions/description	min	typ	max	units
isolation voltage	tested for 1 minute at 1 mA max.	1,500			Vdc
isolation resistance	at 500 Vdc	1,000			MΩ
isolation capacitance	input to output, 100 kHz / 0.1 V single output models dual output models		 1,000 2,000		 pF pF
RoHS compliant	yes				
MTBF	M1L-HDBK-217F	1,000,000			hours

ENVIRONMENTAL

parameter	conditions/description	min	typ	max	units
case operating temperature		-40		85	°C
maximum case temperature	during operation			105	°C
storage temperature		-55		125	°C
storage humidity	non-condensing	5		95	%
temperature rise	100% load		40		°C
lead temperature	1.5 mm from the case for 10 seconds			300	°C

DERATING CURVES

output power vs. ambient temperature

a. ≤5V models

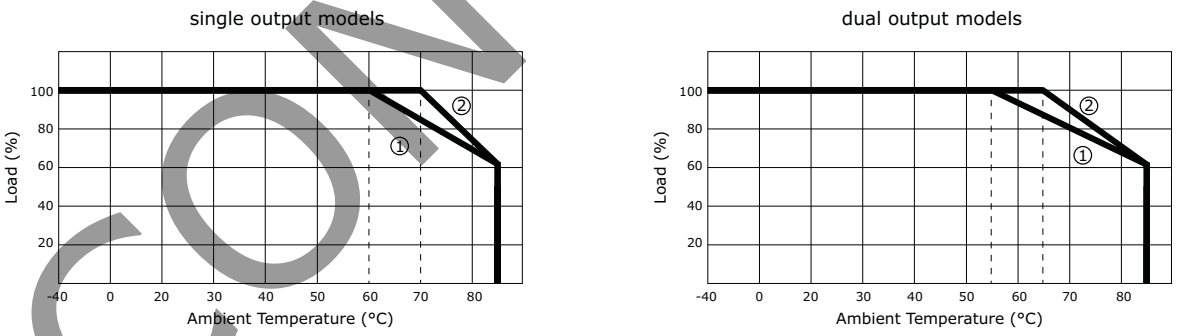

b. >5V models

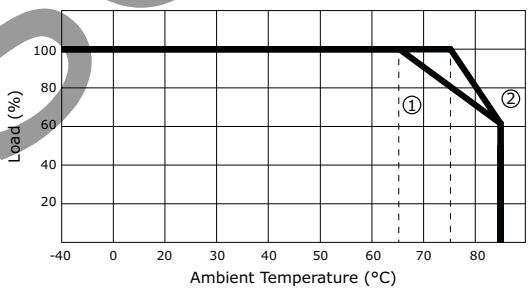

① without heat sink

② with heatsink

DISCONTINUED

MECHANICAL

parameter	conditions/description	min	typ	max	units
dimensions	2.17 x 2.06 x 0.75 inch (55.0 x 52.3 x 19.1mm)				
case material	aluminum				
weight			70		g
	with heat sink		85		g

MECHANICAL DRAWING

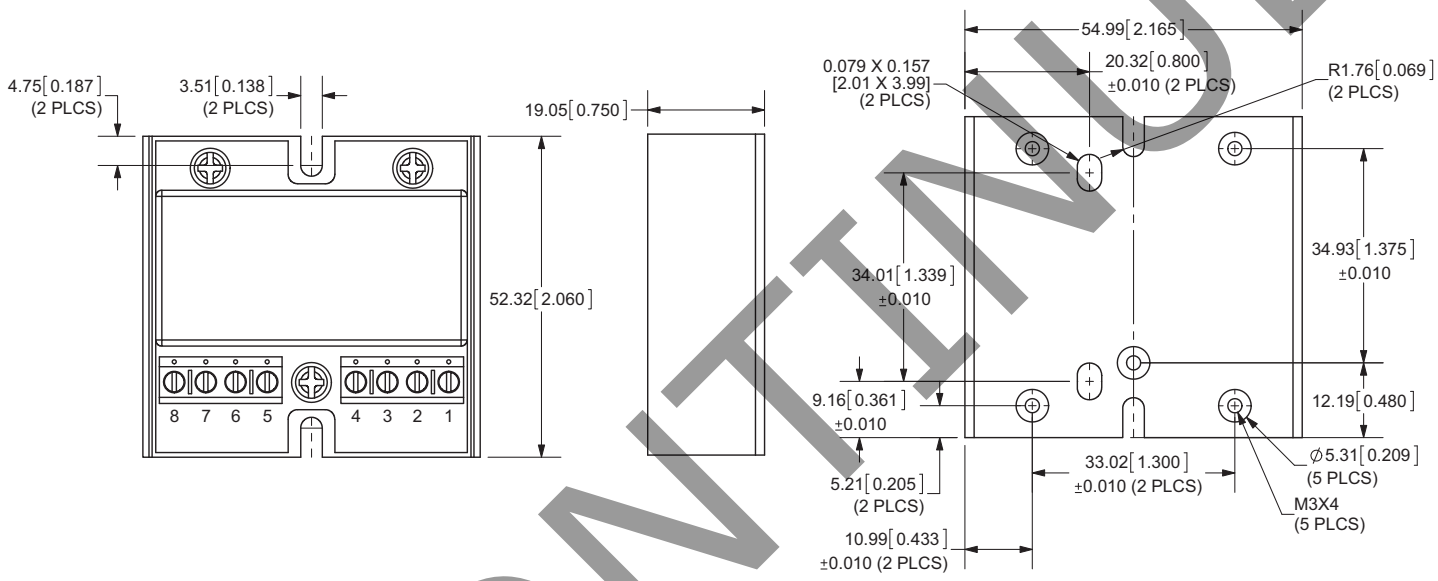

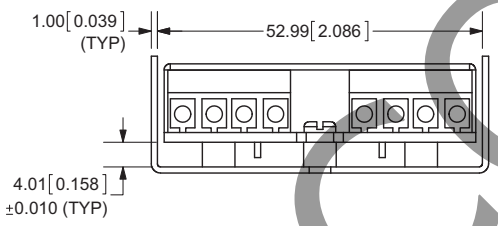

PIN CONNECTIONS		
Pin	Single	Dual
1	0V	-Vo
2	Trim	0V
3	+Vo	+Vo
4	No Pin	No Pin
5	Case	Case
6	On/Off	On/Off
7	Vin	Vin
8	GND	GND

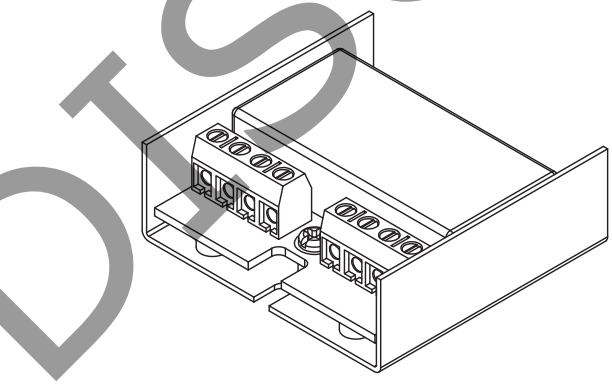

Unit inch[mm]
TOLERANCE: ±0.020 inches UNLESS OTHERWISE SPECIFIED
Screw terminals: Degson Electronics terminal block part number DG301-5.0-04P-12 or equivalent (4 pin, M2.5 screw) 5.0 mm spacing
*DIN rail mounting kit available (part # STK-DIN)

DISCONTINUED

APPLICATION NOTES

1. **Requirement on Output Load**
In order to ensure the product operates efficiently and reliably, make sure the specified range of input voltage is not exceeded and the minimum output load is not less than 10% load. If the actual load is less than the specified minimum load, the output ripple may increase sharply while its efficiency and reliability will reduce greatly. If the actual output power is very small, please add an appropriate resistor as extra loading.

2. **Recommended Circuit**
The VYB15W series has been tested according to the following recommended testing circuit. This series should be tested under load. (see Figure 1)

Figure 1

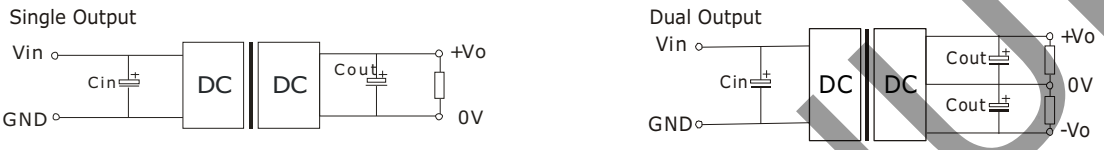

If you want to further decrease the input/output ripple, you can increase capacitance properly or choose capacitors with low ESR. If the capacitance is too big, a startup problem might arise. The maximum allowable capacitance to ensure safe and reliable operation is listed in Table 1.

Table 1

Single Vout (Vdc)	Cout (μF)	Cin (μF)	Dual Vout (Vdc)	Cout (μF)	Cin (μF)
3.3	470	100	--	--	100
5	470	100	±5	±220	100
12	220	100	±12	±100	100
15	220	100	±15	±100	100

3. **Trim Application And Trim Resistance (Single Output Models)**

Application circuit for TRIM (Part in broken line is the interior of models)

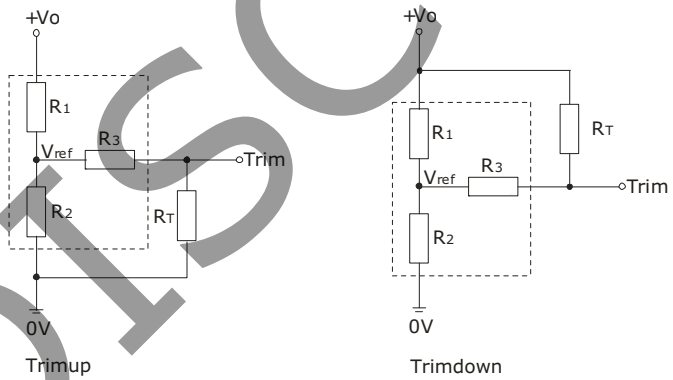

Formula for trim resistance

$$\text{up: } R = \frac{aR_2}{R_2-a} - R_3 \qquad a = \frac{Vref}{Vo'-Vref} \cdot R_1$$

$$\text{down: } R_T = \frac{aR_1}{R_1-a} - R_3 \qquad a = \frac{Vo'-Vref}{Vref} \cdot R_2$$

Note: Value for R1, R2, R3, and Vref refer to the following table.
R_T: Trim resistance
a: User-defined parameter, no actual meaning.
Vo': Trim up/down voltage.

Resistance \ Vo	3.3 (Vdc)	5 (Vdc)	12 (Vdc)	15 (Vdc)
R1 (KΩ)	4.801	2.883	10.971	14.497
R2 (KΩ)	2.863	2.864	2.864	2.864
R3 (KΩ)	15	10	17.8	17.8
Vref (V)	1.24	2.5	2.5	2.5

DISCONTINUED

REVISION HISTORY

rev.	description	date
1.0	initial release	08/08/2011
1.01	V-Infinity branding removed	08/29/2012

The revision history provided is for informational purposes only and is believed to be accurate.

DISCONTINUED

CUI INC®

Headquarters
20050 SW 112th Ave.
Tualatin, OR 97062
800.275.4899

Fax 503.612.2383
cui.com
techsupport@cui.com

CUI offers a two (2) year limited warranty. Complete warranty information is listed on our website.

CUI reserves the right to make changes to the product at any time without notice. Information provided by CUI is believed to be accurate and reliable. However, no responsibility is assumed by CUI for its use, nor for any infringements of patents or other rights of third parties which may result from its use.

CUI products are not authorized or warranted for use as critical components in equipment that requires an extremely high level of reliability. A critical component is any component of a life support device or system whose failure to perform can be reasonably expected to cause the failure of the life support device or system, or to affect its safety or effectiveness.