SERIES: VWRBT3 | DESCRIPTION: DC-DC CONVERTER

DISCONTINUED

FEATURES

- 3 W isolated output
- wide input (2:1)
- industry standard 16 pin SIP package style
- single unregulated outputs
- 1,500 V isolation
- short circuit protection
- wide temperature (-40~85°C)
- efficiency up to 81%



RoHS

MODEL

MODEL	input voltage typ (Vdc)	input voltage range (Vdc)	output voltage (Vdc)	output current min (mA)	output current max (mA)	output power max (W)	ripple and noise[1] max (mVp-p)	efficiency typ (%)
VWRBT3-D12-S3.3-SMT	12	9~18	3.3	83	833	3	75	72
VWRBT3-D12-S5-SMT	12	9~18	5	60	600	3	75	74
VWRBT3-D12-S12-SMT	12	9~18	12	25	250	3	75	78
VWRBT3-D12-S15-SMT	12	9~18	15	20	200	3	75	80
VWRBT3-D24-S3.3-SMT	24	18~36	3.3	83	833	3	75	72
VWRBT3-D24-S5-SMT	24	18~36	5	60	600	3	75	74
VWRBT3-D24-S12-SMT	24	18~36	12	25	250	3	75	78
VWRBT3-D24-S15-SMT	24	18~36	15	20	200	3	75	80
VWRBT3-D48-S3.3-SMT	48	36~72	3.3	83	833	3	75	72
VWRBT3-D48-S5-SMT	48	36~72	5	60	600	3	75	74
VWRBT3-D48-S12-SMT	48	36~72	12	25	250	3	75	78
VWRBT3-D48-S15-SMT	48	36~72	15	20	200	3	75	80

Notes: 1. ripple and noise are measured at 20 Hz BW

PART NUMBER KEY

VWRBT3 - DXX - SXX -SMT

- VWRBT3 — Base Number
- DXX — Input Voltage
- SXX — Output Voltage
- SMT — Packaging Style

Please read our datasheet & drawing disclaimer here.

INPUT

parameter	conditions/description	min	typ	max	units
operating input voltage	12 V model 24 V model	9.0 18.0	12 24	18.0 36.0	Vdc Vdc

OUTPUT

parameter	conditions/description	min	typ	max	units
voltage accuracy	positive negative refer to recommended circuit		±1 ±3	±3 ±5	% %
line regulation	measured from low line to high line		±0.2	±0.5	%
load regulation	measured from 10% to 100% full load		±0.5	±1.0	%
switching frequency	100% load, nominal input voltage		300		kHz
temperature coefficient				±0.03	%/°C

PROTECTIONS

parameter	conditions/description	min	typ	max	units
short circuit protection	continuous, automatic recovery				

SAFETY AND COMPLIANCE

parameter	conditions/description	min	typ	max	units
isolation voltage	tested for 1 minute at 1 mA max.	1,500			Vdc
insulation resistance	at 500 Vdc	1,000			MΩ
isolation capacitance	100 kHz, 1V		85		pF
RoHS compliant	yes				
MTBF	MIL-HDBK-217F, 25°C	1,000,000			hours

ENVIRONMENTAL

parameter	conditions/description	min	typ	max	units
operating temperature		-40		85	°C
storage temperature		-50		125	°C
storage humidity	non-condensing			95	%
temperature rise	at full load		15		°C
lead temperature	for 10 seconds			245	°C

DISCONTINUED

DERATING CURVE

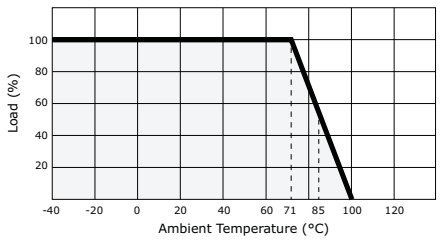

MECHANICAL

parameter	conditions/description	min	typ	max	units
dimensions	0.939 x 0.713 x 0.315 (23.86 x 18.10 x 8.00 mm)				inch
case material	Plastic (UL94-V0)				
weight			6		g

MECHANICAL DRAWING

units: mm [inches]
tolerance: ±0.25 [±0.010]
pin section tolerance: ±0.10 mm [±0.004]

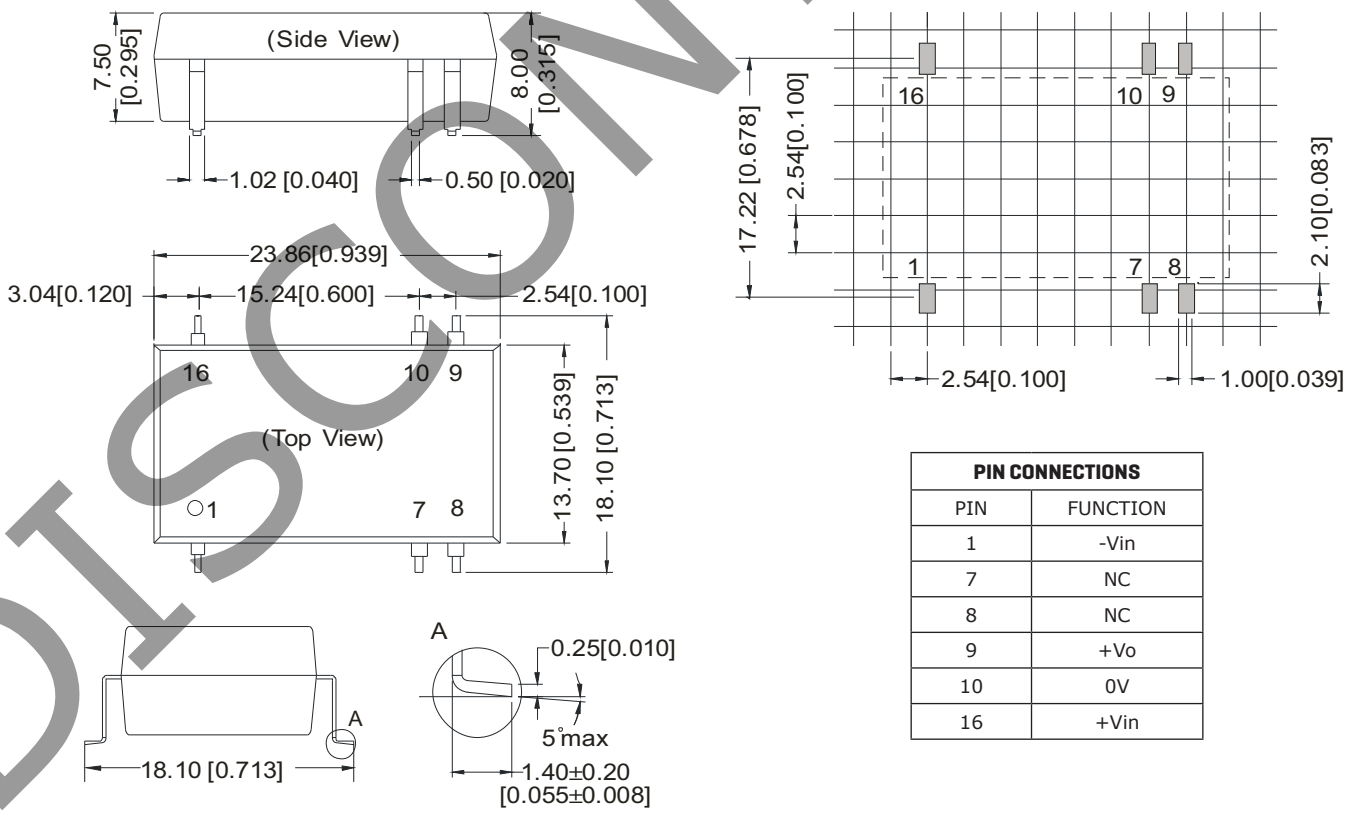

PIN CONNECTIONS	
PIN	FUNCTION
1	-Vin
7	NC
8	NC
9	+Vo
10	0V
16	+Vin

DISCONTINUED

APPLICATION NOTES

-All of the VWRBT3-SMT Series have been tested according to the following recommended testing circuit before leaving the factory. This series should be tested under load (Figure 1). If you want to further decrease the input/output ripple, you can increase capacitance properly or choose capacitors with low ESR. However, the capacitance should not be too high(Table 1).

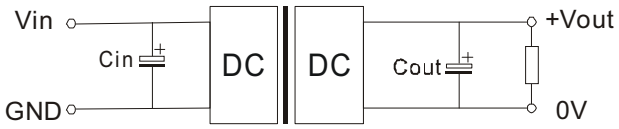

Figure 1

1. **Recommended circuit**
It is best to test with full load and not to test without load. To further reduce output ripple, you may increase the external capacitor, choose a capacitor with low ESR, or add external inductor to the circuit as shown above.

General:
Cin: 12V 100μF
24V & 48V 10μF to 47μF
Cout:see Table 2

Table 1

Vout	Cout/μF (max)
5 V	1000
9 V	680
12 V	470
15 V	330

2. **Input current**
Nominal input voltage range. The input current of the power supply must be sufficient to the startup current (Ip) of the DC/DC module. (Figure 2)

Figure 2

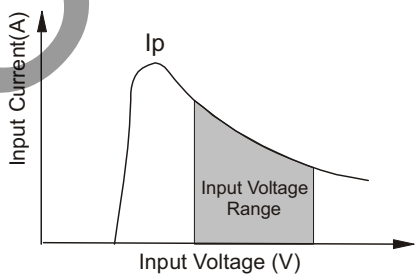

3. **Output Load**
In order to ensure the product operates efficiently and reliably, make sure the specified range of input voltage is not exceeded.

No parallel connection or plug and play.

4. **NC Terminals**
Unless otherwise specified, NC terminals of all series are used for converter's interior circuit connection, and are not allowed connection of any external circuit.

DISCONTINUED

REVISION HISTORY

rev.	description	date
1.0	initial release	05/06/2010
1.01	new template applied, V-Infinity branding removed	09/11/2012

The revision history provided is for informational purposes only and is believed to be accurate.

DISCONTINUED

CUI INC®

Headquarters
20050 SW 112th Ave.
Tualatin, OR 97062
800.275.4899

Fax 503.612.2383
cui.com
techsupport@cui.com

CUI offers a two (2) year limited warranty. Complete warranty information is listed on our website.

CUI reserves the right to make changes to the product at any time without notice. Information provided by CUI is believed to be accurate and reliable. However, no responsibility is assumed by CUI for its use, nor for any infringements of patents or other rights of third parties which may result from its use.

CUI products are not authorized or warranted for use as critical components in equipment that requires an extremely high level of reliability. A critical component is any component of a life support device or system whose failure to perform can be reasonably expected to cause the failure of the life support device or system, or to affect its safety or effectiveness.