SERIES: VWRAS3 | DESCRIPTION: DC-DC CONVERTER

DISCONTINUED

FEATURES

- 3 W isolated output
- wide input (2:1)
- industry standard 8 pin SIP package
- dual unregulated outputs
- 1,500 V isolation
- short circuit protection
- wide temperature (-40~85°C)
- efficiency up to 83%



RoHS

MODEL

MODEL	input voltage typ (Vdc)	input voltage range (Vdc)	output voltage (Vdc)	output current max (mA)	output power max (W)	ripple[1] max (mVp-p)	noise[1] max (mVp-p)	efficiency typ (%)
VWRAS3-D12-D5-SIP	12	9.0~18.0	±5	±300	3	100	150	80
VWRAS3-D12-D9-SIP	12	9.0~18.0	±9	±167	3	100	150	81
VWRAS3-D12-D12-SIP	12	9.0~18.0	±12	±125	3	100	150	82
VWRAS3-D12-D15-SIP	12	9.0~18.0	±15	±100	3	100	150	83
VWRAS3-D24-D5-SIP	24	18.0~36.0	±5	±300	3	100	150	80
VWRAS3-D24-D9-SIP	24	18.0~36.0	±9	±167	3	100	150	81
VWRAS3-D24-D12-SIP	24	18.0~36.0	±12	±125	3	100	150	82
VWRAS3-D24-D15-SIP	24	18.0~36.0	±15	±100	3	100	150	83

Notes: 1. ripple and noise are measured at 20 MHz BW

PART NUMBER KEY

VWRAS3 - DXX - DXX -SIP

- VWRAS3 — Base Number
- DXX — Input Voltage
- DXX — Output Voltage
- SIP — Packaging Style

INPUT

parameter	conditions/description	min	typ	max	units
operating input voltage	12 V model 24 V model	9.0 18.0	12 24	18.0 36.0	Vdc Vdc

OUTPUT

parameter	conditions/description	min	typ	max	units
line regulation	input voltage from low to high		±0.2	±0.5	%
load regulation	measured from 10% load to full load		±0.5	±1.0	%
voltage accuracy	input voltage range refer to output load		±1	±3	%
switching frequency	100% load, input voltage range	200		400	kHz
temperature coefficient			±0.03		%/°C

PROTECTIONS

parameter	conditions/description	min	typ	max	units
short circuit protection	continuous				

SAFETY AND COMPLIANCE

parameter	conditions/description	min	typ	max	units
isolation voltage	for 1 minute at 1 mA max.	1,500			Vdc
isolation resistance	at 500 Vdc	1,000			MΩ
MTBF		1,000,000			hours
RoHS compliant	yes				

ENVIRONMENTAL

parameter	conditions/description	min	typ	max	units
operating temperature		-40		85	°C
storage temperature		-50		125	°C
storage humidity	non-condensing			95	%
temperature rise	at full load		15	35	°C
lead temperature	1.5 mm from case for 10 seconds			300	°C

DISCONTINUED

DERATING CURVES

1. output power vs. ambient temperature

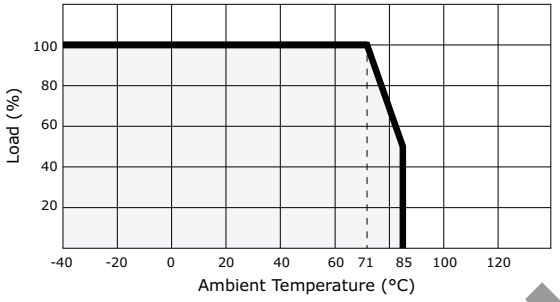

MECHANICAL

parameter	conditions/description	min	typ	max	units
dimensions	0.866 x 0.374 x 0.472 (22.00 x 9.50 x 12.00 mm)				inch
case material	plastic (UL94-V0)				
weight			6		g

MECHANICAL DRAWING

units: mm [inches]
tolerance: ±0.25 [±0.010]
pin section tolerance: ±0.10 mm [±0.004]

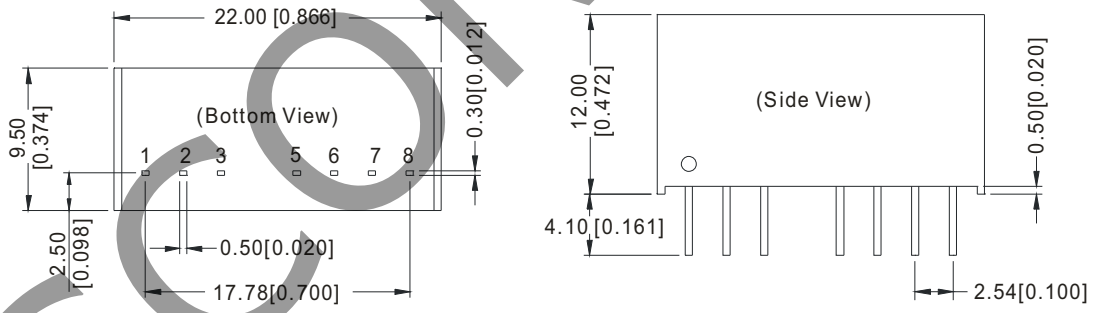

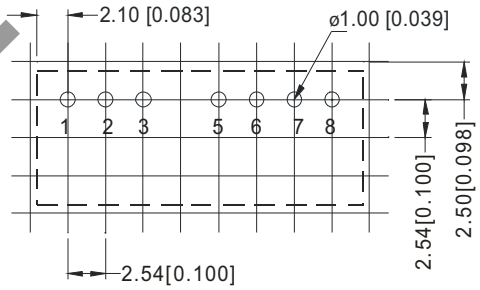

PIN CONNECTIONS	
PIN	FUNCTION
1	GND
2	Vin
3	CTRL
5	NC
6	+Vo
7	0V
8	-Vo

DISCONTINUED

APPLICATION NOTES

-All of the VWRAS3 Series have been tested according to the following recommended testing circuit before leaving the factory. This series should be tested under load (Figure 1). If you want to further decrease the input/output ripple, you can increase capacitance properly or choose capacitors with low ESR. However, the capacitance should not be too high (Table 1).

Table 1

Vout	Cout/μF (max)
±5 V	±680
±9 V	±330
±12 V	±220
±15 V	±150

1. **NCs Terminals**
   Unless otherwise specified, NC terminals of all series are used for converter's interior circuit connection, and are not allowed connection of any external circuit

2. **CTRL Terminal**
   When open or high impedance, the converter will work well; When this pin is 'high'; the converter will shutdown; It should be noted that the input current should remain between 5-10mA,exceeding the maximum 20mA will cause permanent damage to the converter.

3. **Input current**
   Nominal input voltage range. The input current of the power supply must be sufficient to the startup current (Ip) of the DC/DC module (Figure 2)

Figure 1

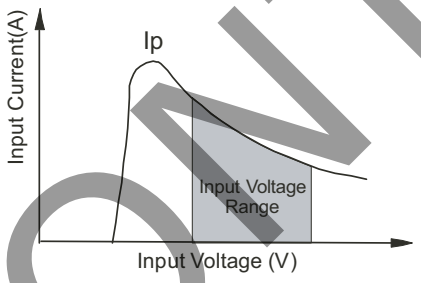

4. **Output Load**
   In order to ensure the product operates efficiently and reliably, make sure the specified range of input voltage is not exceeded.

No parallel connection or plug and play.

DISCONTINUED

REVISION HISTORY

rev.	description	date
1.0	initial release	07/25/2007
1.01	new template applied	07/23/2010
1.02	new template applied, V-Infinity branding removed	09/11/2012

The revision history provided is for informational purposes only and is believed to be accurate.

DISCONTINUED

CUI INC®

Headquarters
20050 SW 112th Ave.
Tualatin, OR 97062
800.275.4899

Fax 503.612.2383
cui.com
techsupport@cui.com

CUI offers a two (2) year limited warranty. Complete warranty information is listed on our website.

CUI reserves the right to make changes to the product at any time without notice. Information provided by CUI is believed to be accurate and reliable. However, no responsibility is assumed by CUI for its use, nor for any infringements of patents or other rights of third parties which may result from its use.

CUI products are not authorized or warranted for use as critical components in equipment that requires an extremely high level of reliability. A critical component is any component of a life support device or system whose failure to perform can be reasonably expected to cause the failure of the life support device or system, or to affect its safety or effectiveness.