PART NUMBER: VSP-200 Series **DESCRIPTION:** single output with PFC function

features

- ·Universal AC input / full range
- ·Built-in active PFC function
- ·Short circuit, over load, over voltage, over temperature protected
- ·Built-in cooling fan speed control
- ·Built-in constant current limiting circuit
- ·Low profile: 50mm thickness
- ·Built-in fan speed control
- ·Remote on/off control (Optional)
- ·LED indicator for power on
- ·100% full load burn-in test
- ·Fixed switching frequency at PFC:67KHz PWM:134KHz
- ·3 year warranty



MODEL	VSP-200-3.3	-5	-7.5	-12	-13.5	-15	-24	-27	-48
output voltage (V dc)	3.3	5	7.5	12	13.5	15	24	27	48
voltage tolerance[3]	±2%	±2%	±2%	±2%	±2%	±2%	±2%	±2%	±2%
output rated current (A)	40	40	26.7	16.7	14.9	13.4	8.4	7.5	4.2
output current range (A)	0~40	0~40	0~26.7	0~16.7	0~14.9	0~13.4	0~8.4	0~7.5	0~4.2
output power (W)	132	200	200.2	200.4	201.1	201	201.6	202.5	201.6
ripple & noise (mVp-p max.)[2]	100	100	100	100	100	100	150	150	250
line regulation	±0.5%	±0.5%	±0.5%	±0.5%	±0.5%	±0.5%	±0.5%	±0.5%	±0.5%
load regulation	±1.0%	±1.0%	±1.0%	±0.5%	±0.5%	±0.5%	±0.5%	±0.5%	±0.5%
efficiency (typ)	65%	71%	76%	79%	80%	81%	83%	83%	84%
voltage adj. range (V dc)	3.14~3.63	4.75~5.5	7.13~8.25	11.4~13.2	12.8~14.9	14.3~16.5	22.8~26.4	25.7~29.7	45.6~52.8
over voltage protection (V dc)	3.63~4.46	5.5~6.75	8.25~10.13	13.2~16.2	14.85~18.2	16.5~20.25	26.4~32.4	29.7~36.45	52.8~64.8
input voltage range	85 ~ 264 V ac 120 ~ 370 V dc								
ac current	3.5 A/115 V ac, 1.7 A/230 V ac								
inrush current	40 A cold start								
leakage current	<2mA/240VAC								
overload protection	105~150% rated output power type: constant current limiting, recovers automatically after fault condition is removed								
over temp. protection	95°±5°C (TSW1: detect on heatsink of power transistor) type: shutdown o/p voltage, recovers automatically after temperature goes down								
temperature coefficient	±0.05% / °C (0~50°C)								
set up, rise, hold up time	600ms, 30ms, 20ms at full load								
vibration	10~500Hz, 2G 10min./1cycle (1 hour each axes)								
withstand voltage	I/P-O/P: 3KVAC, I/P-FG: 1.5KVAC, O/P-FG:0.5KVAC								
isolation resistance	I/P-O/P, I/P-FG, O/P-FG: 500VDC / 100M Ohms								
working temp., humidity	-10°C~+60°C (refer to output derating curve), 20%-90% RH								
storage temp., humidity	-20ºC~+85ºC, 10%~95% RH								
dimensions	199x99x50 mm								
safety standards	UL60950-1, TUV EN60950-1 approved								
EMC standards	EN55022 (CISPR22) class B, EN61000-3-(2, 3), EN61000-4-(2, 3, 4, 5, 6, 8, 11), ENV50204, EN55024, light industry level, criteria A								

notes:

1. all parameters NOT specially mentioned are measured at 230VAC input, rated load and 25 of ambient temperature
2. ripple & noise are measured at 20MHz of bandwidth by using a 12" twisted pair-wire terminated with 0.1uf & 47uf parallel capacitors
3. tolerance : includes set up tolerance, line regulation and load regulation
4. the power supply is considered a component which will be installed into a final equipment. The final equipment must be re-confirmed that it still meets EMC directives
5. model # ...

Please read our datasheet & drawing disclaimer here.

PART NUMBER: VSP-200 Series

DESCRIPTION: single output with PFC function

OUTPUT DERATING

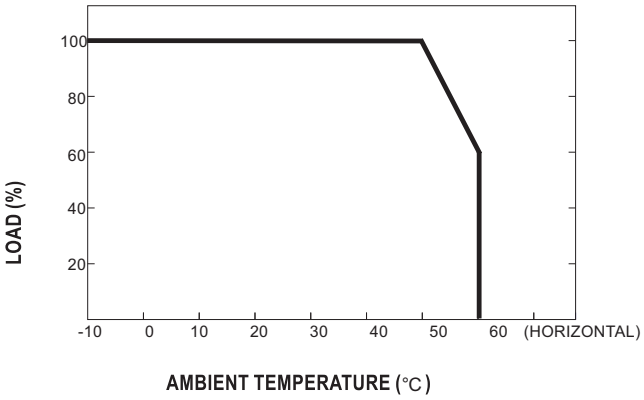

OUTPUT DERATING vs INPUT VOLTAGE

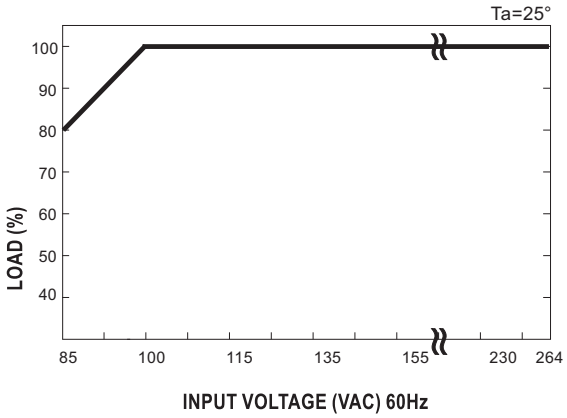

BLOCK DIAGRAM

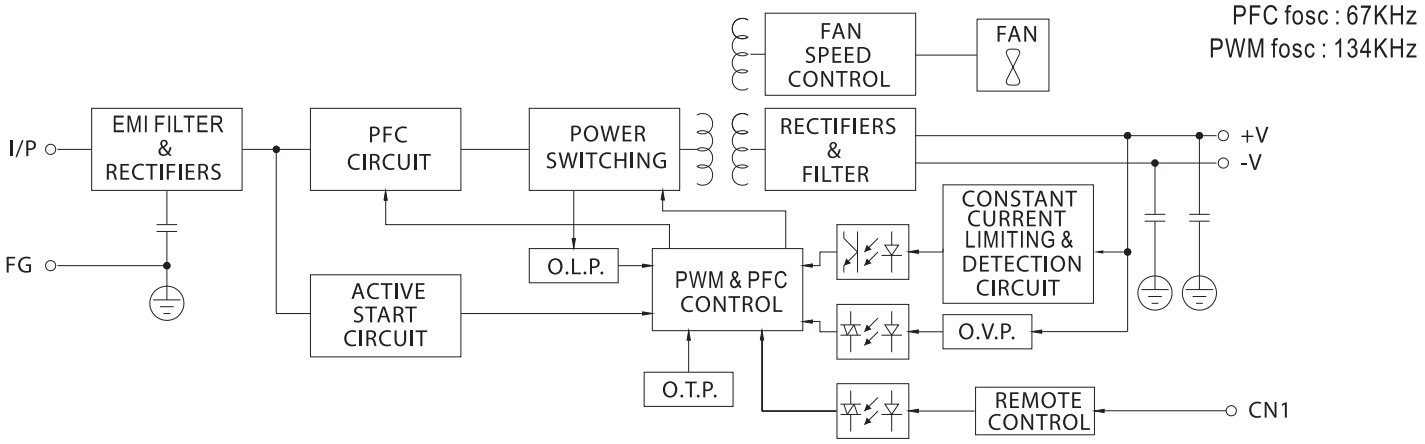

PART NUMBER: VSP-200 Series **DESCRIPTION:** single output with PFC function

DIMENSIONS (mm)

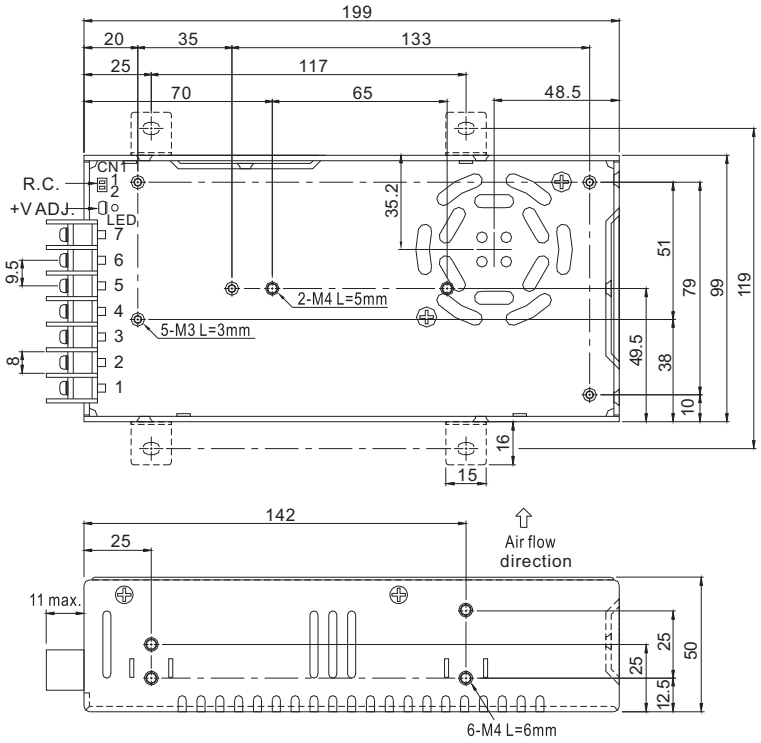

Terminal Pin No. Assignment

Pin No.	Assignment	Pin No.	Assignment
1	AC/L	4,5	DC OUTPUT -V
2	AC/N	6,7	DC OUTPUT +V
3	FG ⏚		

Remote ON/OFF(CN1):JST S2B-XH or equivalent(optional)

Pin No.	Assignment	Mating Housing	Terminal
1	RC+	JST XHP or equivalent	JST SXH-001T-P0.6 or equivalent
2	RC-		