SERIES: VSCP-1K2 | DESCRIPTION: AC-DC POWER SUPPLY

DISCONTINUED

FEATURES

- up to 1,200 W continuous power
- universal input (90~260 Vac / 130~370 Vdc)
- single output from 5~60 V
- programmable output voltage
- active power correction (98%)
- current sharing capable
- power good, remote sense, remote on/off control
- built-in DC fan
- over load, over voltage, over temperature, and short circuit protections
- UL and TUV safety approvals
- efficiency up to 90%



MODEL

MODEL	output voltage[1] (Vdc)	output current[2] max (A)	output power max (W)	ripple and noise[3] max (mVp-p)	efficiency typ (%)
VSCP-1K2-05	5	160 / 200	1,000	50	78
VSCP-1K2-09	9	88 / 133	1,200	90	83
VSCP-1K2-12	12	66 / 100	1,200	120	84
VSCP-1K2-15	15	53 / 80	1,200	150	85
VSCP-1K2-18	18	44 / 66.6	1,200	150	85
VSCP-1K2-24	24	33 / 50	1,200	150	88
VSCP-1K2-36	36	22 / 33.3	1,200	150	88
VSCP-1K2-48	48	16 / 24	1,200	150	89
VSCP-1K2-60	60	13 / 20	1,200	150	90

Notes:
1. output voltage is measured at output power connector
2. maximum current is measured at 100 ~ 120 V input / 200 ~ 240 V input
3. ripple and noise is measured from 10 KHz to 20 MHz at output terminals with 0.1 µF ceramic capacitor and a 22 µF electrolytic capacitor in parallel

PART NUMBER KEY

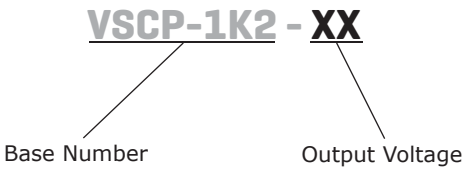

Please read our datasheet & drawing disclaimer here.

INPUT

parameter	conditions/description	min	typ	max	units
voltage		90 130		260 370	Vac Vdc
frequency		47		63	Hz
current	at 230 Vac		7		A
inrush current	at 230 Vac, cold start		120		A
power factor correction	at 230 Vac, full load		0.98		

OUTPUT

parameter	conditions/description	min	typ	max	units
temperature coefficient	0 ~ 50°C		±0.04		%/°C
hold-up time	at 230 Vac, full load			12	ms
adjustability	adjustable with built-in trim pot	-12		+3	%
programming	output voltage programmable through external 1 ~ 5 V control voltage on VCI. Control voltage can also be obtained from VCO via a 470 KΩ pot. see application diagrams	25		100	%
remote sense	Designated as (VS+) and (VS-). Total voltage compensation from cable losses with respect to the main output.				
remote inhibit	Designated as (INH), requires a low signal to inhibit the output.				
current sharing	Designated as (PAR), use in parallel for forced current sharing function.				

PROTECTION

parameter	conditions/description	min	typ	max	units
over voltage protection		110		135	%
over current protection[1]	current limiting 3 times with auto recovery before shutdown				

Notes: 1. Protection mode sends a pulse, waits 1.5 seconds, sends second pulse, waits 3 seconds, sends third pulse, waits 5 seconds. If overload is still present, the unit will shutdown.

SAFETY & COMPLIANCE

parameter	conditions/description	min	typ	max	units
safety approvals	UL/cUL 1950, TUV EN 60950				
EMI/EMC	EN 55022, EN 61000-4-(2,3,4,5,6,8,11), EN 61000-3-(2,3), ENV50204				
leakage current	at 240 Vac			7.0	mA
RoHS compliant	yes				

ENVIRONMENTAL

parameter	conditions/description	min	typ	max	units
operating temperature		0		50	°C
storage temperature		-20		85	°C
operating humidity		20		90	%
storage humidity		10		95	%
vibration	for 60 minutes, each axis	10		200	Hz

DISCONTINUED

DERATING CURVES

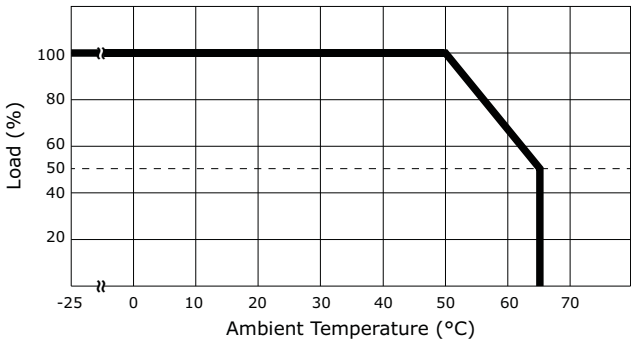

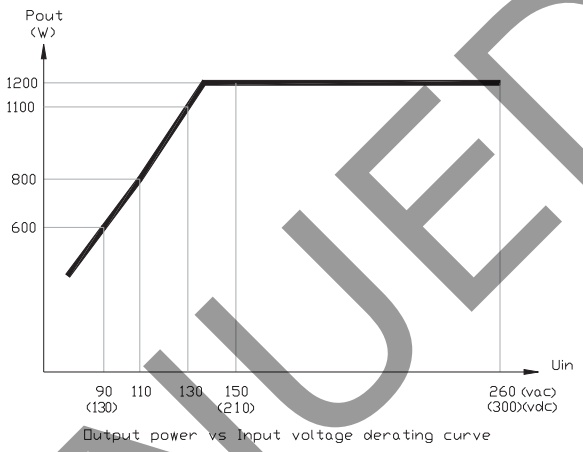

MECHANICAL

parameter	conditions/description	min	typ	max	units
weight			4.5		Kg
dimensions	11.42 x 4.72 x 5.22 (290 x 120 x 132.5 mm)				inch

DISCONTINUED

MECHANICAL DRAWING

units: mm[inch]
tolerance: ±1.0mm unless otherwise specified

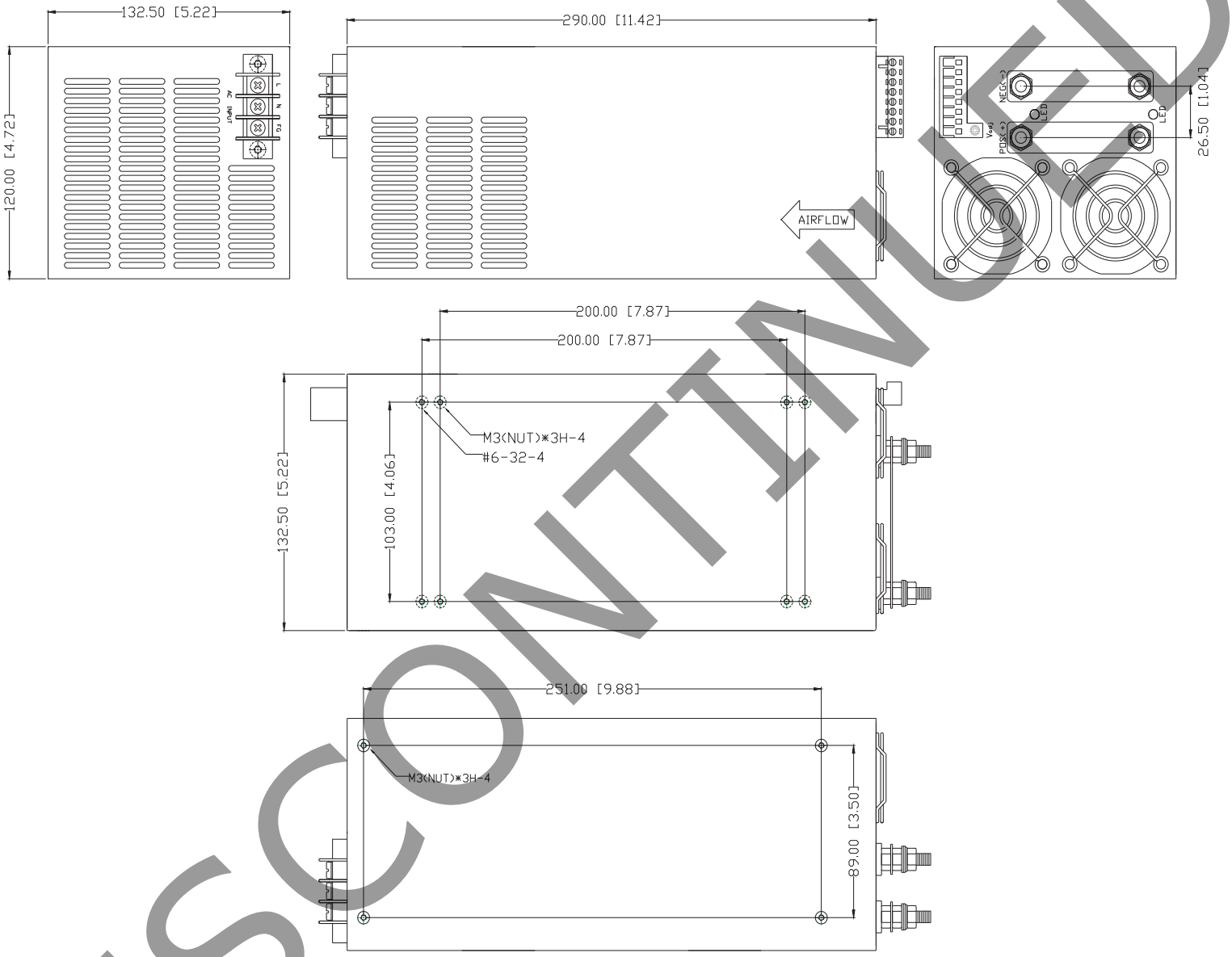

LOGIC CONNECTOR		
1	VS+	output voltage remote sense+
2	VS-	output voltage remote sense-
3	VCI	command input voltage for output programming
4	VCO	5~10 Vdc reference for output programming
5	FAL	power failure detected
6	PG	power good signal
7	PAR	current sharing / parallel function
8	GND	return / output ground
9	INH	inhibit / remote on-off

DISCONTINUED

LOGIC CONNECTIONS

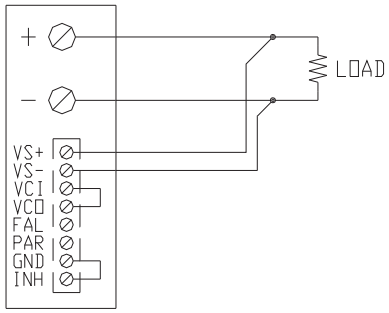

REMOTE SENSING

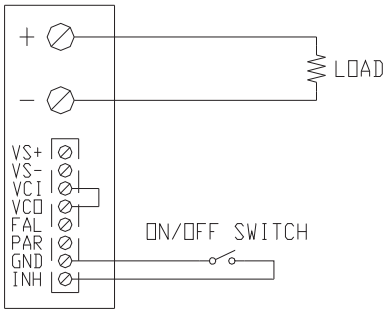

ON/OFF CONTROL BY SWITCH

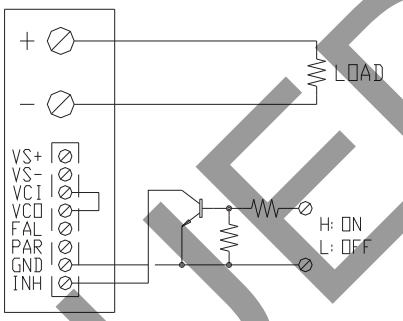

ON/OFF CONTROL BY TRANSISTOR

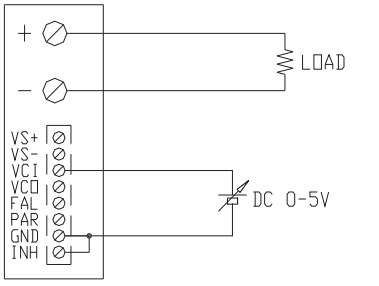

OUTPUT VOLTAGE ADJUST WITH DC 0-5V

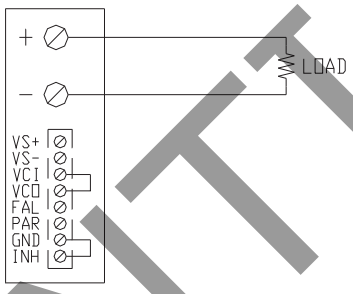

USING INTERNAL VOLTAGE CONTROL

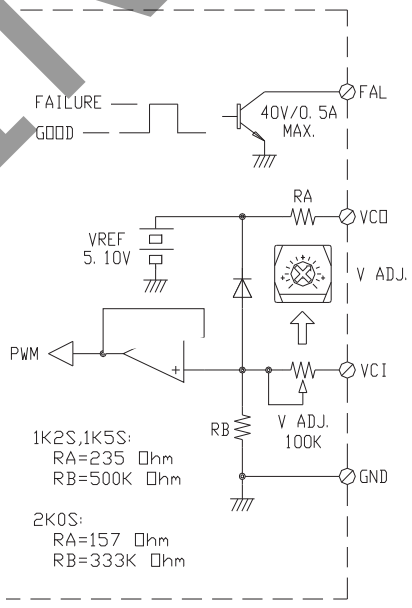

VCI AND VCO SIGNAL

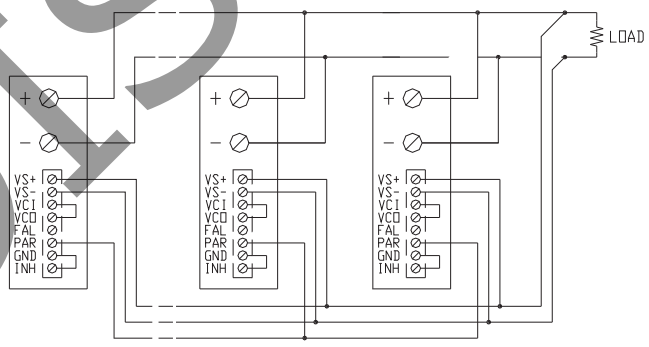

PARALLEL OPERATION WITH REMOTE SENSING

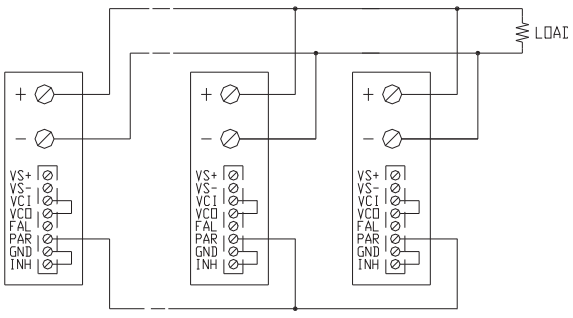

PARALLEL OPERATION WITHOUT REMOTE SENSING

DISCONTINUED

REVISION HISTORY

rev.	description	date
1.0	initial release	06/28/2006
1.01	new template applied	08/20/2011
1.02	V-Infinity branding removed	08/28/2012

The revision history provided is for informational purposes only and is believed to be accurate.

DISCONTINUED

CUI INC®

Headquarters
20050 SW 112th Ave.
Tualatin, OR 97062
800.275.4899

Fax 503.612.2383
cui.com
techsupport@cui.com

CUI offers a two (2) year limited warranty. Complete warranty information is listed on our website.

CUI reserves the right to make changes to the product at any time without notice. Information provided by CUI is believed to be accurate and reliable. However, no responsibility is assumed by CUI for its use, nor for any infringements of patents or other rights of third parties which may result from its use.

CUI products are not authorized or warranted for use as critical components in equipment that requires an extremely high level of reliability. A critical component is any component of a life support device or system whose failure to perform can be reasonably expected to cause the failure of the life support device or system, or to affect its safety or effectiveness.