SERIES: VMS-365 | DESCRIPTION: AC-DC POWER SUPPLY

DISCONTINUED

FEATURES

- up to 365 W continuous power
- industry standard 3" x 5" footprint
- 18 W/in³ power density
- universal input (85-264 Vac / 125-373 Vdc)
- single output from 12 to 48 V
- active power correction (98%)
- 12 V auxiliary fan output, 5 V standby
- no minimum load required
- over load, over voltage, and short circuit protections
- full medical and ITE safety approvals
- efficiency up to 90%

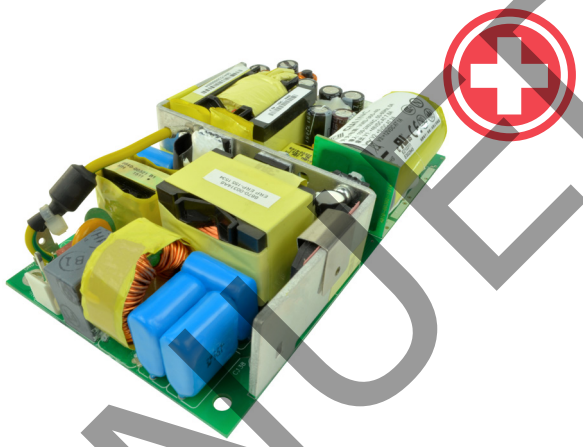

MODEL	output voltage (Vdc)	output current max (A)	output power[1] max (W)	ripple and noise[2] max (mVp-p)	efficiency typ (%)
VMS-365-12	12	30.4	365	120	90
VMS-365-24	24	15.2	365	240	90
VMS-365-48	48	7.6	365	480	90

Notes: 1. Total continuous output power will not exceed 365 W forced air (400 LFM), 200 W without fan
2. Measured at 20 MHz, twisted pair with 0.47 µF ceramic and 22 µF tantalum parallel capacitors

PART NUMBER KEY

VMS-365 - XX

Base Number — Output Voltage

Please read our datasheet & drawing disclaimer here.

INPUT

parameter	conditions/description	min	typ	max	units
voltage		90 125		264 373	Vac Vdc
frequency		47		63	Hz
current	at 90 Vac, cold start at 180 Vac, cold start			5 2.5	A A
inrush current	no damage at 230 Vac, full load, cold start				
power factor	measured at full load and 115 Vac/60 Hz and 230 Vac/50 Hz input source, coming impedance will be less than 0.25Ω, compliant to EN61000-3-2 for harmonic currents	0.9	0.98		

OUTPUT

parameter	conditions/description	min	typ	max	units
line regulation	low line to high line		±1		%
load regulation	all other outputs 12 V aux. output 5 V SB		±1 ±15 ±5		% % %
temperature coefficient			0.25		mV/°C
transient response	25% I_{max} to I_{max} , 0.1 A/µs slew rate, ±5% max. deviation, 10 ms recovery				
start-up time		500			ms
rise time		0.2		20	ms
hold-up time	115 Vac /60 Hz		16.6		ms
adjustability			±5		%
fan drive	12 Vdc / 500 mA for external fan				
standby	5 Vdc, 2A (400 LFM forced air) / 1A (convection)				

PROTECTIONS

parameter	conditions/description	min	typ	max	units
over voltage protection				130	%
over current protection	automatically recovers			150	%
short circuit protection	auto recovery with no damage from a short on any output				

SAFETY & COMPLIANCE

parameter	conditions/description	min	typ	max	units
isolation voltage	primary to secondary (for 1 second): primary to earth ground (for 1 second):	5,656 5,656			Vdc Vdc
safety approvals	UL 60950-1/60601-1, VDE EN60950-1/EN60601-1,				
EMI/EMC	EN55022:1998 (CISPR 22 class A conducted), EN61000-3-2: 2000, EN61000-3-3: A1:2001, EN55024 (IEC61000-4-2: 1995, IEC61000-4-3: 1995, IEC61000-4-4: 1995, IEC61000-4-5: 1995, IEC61000-4-6: 1996, IEC61000-4-11: 1994), CE				
leakage current	measured per IEC 60950-1, paragraph 5.1, test voltage of 120 Vac/60 Hz test voltage of 230 Vac / 60 Hz			0.110 0.275	mA mA
MTBF	with 400 LFM forced air, MIL-HDBK-217E-1, 75% of rated full load, 25°C ambient		300,000		hrs
RoHS	2011/65/EU				

DISCONTINUED

ENVIRONMENTAL

parameter	conditions/description	min	typ	max	units
operating temperature		-20		50	°C
storage temperature		-40		80	°C
operating humidity	non-condensing	8		90	%
storage humidity				95	%
shock	operating (11 ms, half sine, for a total of 6 shock inputs) non-operating (2 ms, half sine, for a total of 6 shock inputs)		10 140		G G
vibration	operating (10 ~ 300 Hz, 1 hour per axis, 3 hours total) non-operating (10 ~ 500 Hz, 1 hour per axis, 3 hours total)		1 2		Grms Grms

DERATING CURVES

output power vs. ambient temperature

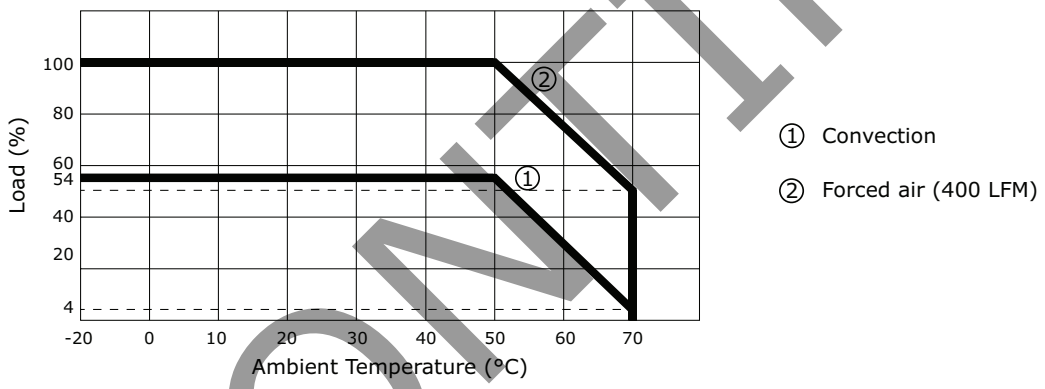

APPLICATION NOTES

1. P/S ON

The supply output can be enabled or disabled through the PS ON pin. The control logic is negative logic. A common control circuit is shown below.

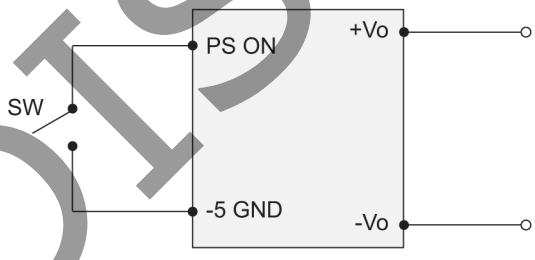

REMOTE ON/OFF CONTROL

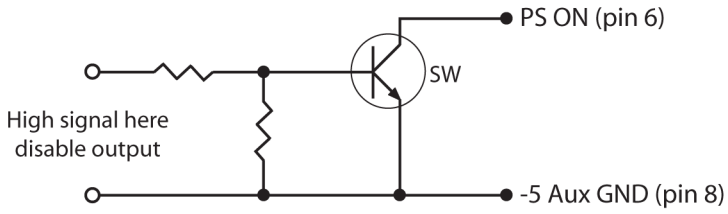

REMOTE ON/OFF CONTROL WITH TRANSISTOR SWITCH

Logic Table	Negative Logic
SW Closed (V_{PSON} <2.5 V)	Output on
SW Open (V_{PSON} >2.5 Vor Open Circuit	Output off

DISCONTINUED

2. **Power OK**

The POK pin of CN3 shall change from STATE (<400mV) to the high STATE (>4.5V) 100-500 ms after the main outputs are within the regulation limits. Conversely, the POK should be de-asserted to a low srare when any of the main output voltages fall below its under-voltage threshold, or when the main power has been removed for a time sufficiently long such that the power supply operation cannot be guaranteed beyond the power-down warning time. The power down warning time must be 1mS minimum. The electrical characteristics for the Power OK output driver are shown below.

POWER OK SIGNAL CHARACTERISTICS	
Signal Type	+5 V TTL Compatible
Logic Level Low	< 0.4 V while Sinking a maximum of 10 mA
Logic Level High	Between 2.4 V and 5 V Output while Sourcing 200 µA
High State Output Impedance	1 K Pull-Up from +5 Vsb to Termination Point
Max. Low Level Surge Current	56 mA for 5µS with a 500 mS on/150 mS off duty cycle

MECHANICAL DRAWING

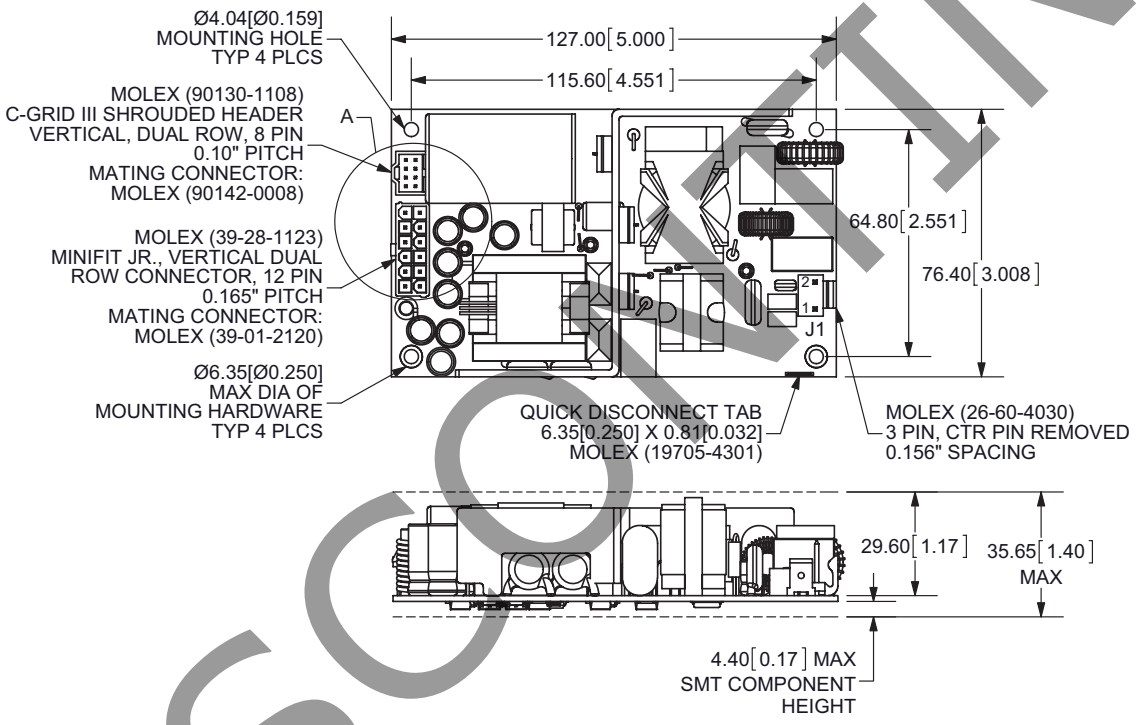

CN1	
1	AC Line
2	AC Neutral

INPUT SPADE CONNECTOR	
Gnd	AC Ground

CN2	
1	V1
2	V1
3	V1
4	V1
5	V1
6	V1
7	DC Returns
8	DC Returns
9	DC Returns
10	DC Returns
11	DC Returns
12	DC Returns

CN3	
1	+5V Aux
2	FAN-
3	RS+
4	FAN+
5	P OK
6	PS ON
7	RS-
8	-5V Aux GND

DISCONTINUED

REVISION HISTORY

rev.	description	date
1.0	initial release	05/13/2011
1.01	new template applied	08/01/2011
1.02	V-Infinity branding removed	08/22/2012
1.03	updated drawing	04/18/2013
1.04	added CCC safety approval	12/16/2013
1.05	removed CCC safety approval	10/21/2018

The revision history provided is for informational purposes only and is believed to be accurate.

DISCONTINUED

CUI INC®

Headquarters
20050 SW 112th Ave.
Tualatin, OR 97062
800.275.4899

Fax 503.612.2383
cui.com
techsupport@cui.com

CUI offers a two (2) year limited warranty. Complete warranty information is listed on our website.

CUI reserves the right to make changes to the product at any time without notice. Information provided by CUI is believed to be accurate and reliable. However, no responsibility is assumed by CUI for its use, nor for any infringements of patents or other rights of third parties which may result from its use.

CUI products are not authorized or warranted for use as critical components in equipment that requires an extremely high level of reliability. A critical component is any component of a life support device or system whose failure to perform can be reasonably expected to cause the failure of the life support device or system, or to affect its safety or effectiveness.