SERIES: VGD-30 | DESCRIPTION: AC-DC POWER SUPPLY

FEATURES

- up to 30 W continuous power
- universal input (85~264 Vac / 120~370 Vdc)
- dual output
- overload, over voltage, and short circuit protections
- UL/cUL and Intertek EN 60950-1 safety approvals
- built-in EMI filter
- efficiency up to 80%



MODEL	output voltage (Vdc)	output current min (A)	output current max (A)	output power[1] max (W)	ripple and noise[2] max (mVp-p)	efficiency typ (%)
VGD-30-D512	5 12	0.3 0.3	4 2	30	80 120	79
VGD-30-D524	5 24	0.3 0.2	4 1	30	80 240	80

Note: 1. Maximum total combined power.
2. Ripple & noise are measured at 20 MHz BW with 22 μF aluminum electrolytic capacitor and 0.1 μF ceramic capacitor on the output.

DISCONTINUED

PART NUMBER KEY

VGD-30 - DXXX

Base Number — Output Voltage

Please read our datasheet & drawing disclaimer here.

INPUT

parameter	conditions/description	min	typ	max	units
voltage		85 120		264 370	Vac Vdc
frequency		47		63	Hz
input current	115 Vac 230 Vac			0.6 0.35	A A
inrush current	115 Vac, full load, cold start 230 Vac, full load, cold start			30 60	A A

OUTPUT

parameter	conditions/description	min	typ	max	units
line regulation			±1		%
load regulation			±5		%
temperature coefficient			±0.03		%/°C
hold-up time	115 Vac, full load 230 Vac, full load		10 50		ms ms
adjustability	adjustable with built-in trim pot[1]	-5		+5	%

Note: 1. Adjustment of 5 V output only.

PROTECTIONS

parameter	conditions/description	min	typ	max	units
over voltage protection	shut down and latch off, recover after restart.			7	V
overload protection	hiccup mode, automatically recovers	110		160	%
short circuit protection	continuous, automatically recovers				

SAFETY & COMPLIANCE

parameter	conditions/description	min	typ	max	units
isolation voltage	input to output input to case output to case		3,000 1,500 500		Vac Vac Vac
isolation resistance	input to output at 500 Vdc at 25°C	100			MΩ
safety approvals	UL 60950-1, Intertek EN 60950-1				
EMI/EMC	EN 55022 (CISPR22) Class B, EN 61000-3-2,-3,-4-2,3,4,5,6,8,11; EN 55024				
leakage current	at 240 Vac			3.5	mA
MTBF	MIL-HDBK-217F(25°C)	300,000			hrs
RoHS compliant	yes				

ENVIRONMENTAL

parameter	conditions/description	min	typ	max	units
operating temperature	see derating curve	-10		60	°C
storage temperature		-20		85	°C
operating humidity	non-condensing	20		90	%
storage humidity		10		95	%

DISCONTINUED

MECHANICAL

parameter	conditions/description	min	typ	max	units
dimensions	3.9 x 3.8 x 1.4 (99 x 97 x 36 mm)				inch
cooling method	free air convection (see derating curve below)				
weight			328		g

DERATING CURVES

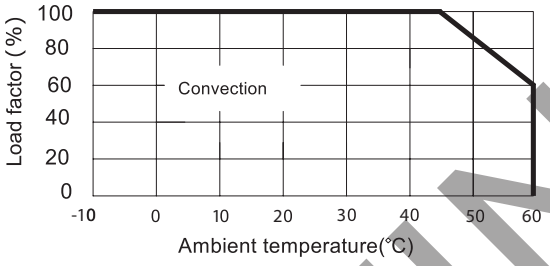

MECHANICAL DRAWING

units mm[inches]
tolerance:
±0.3mm unless otherwise specified

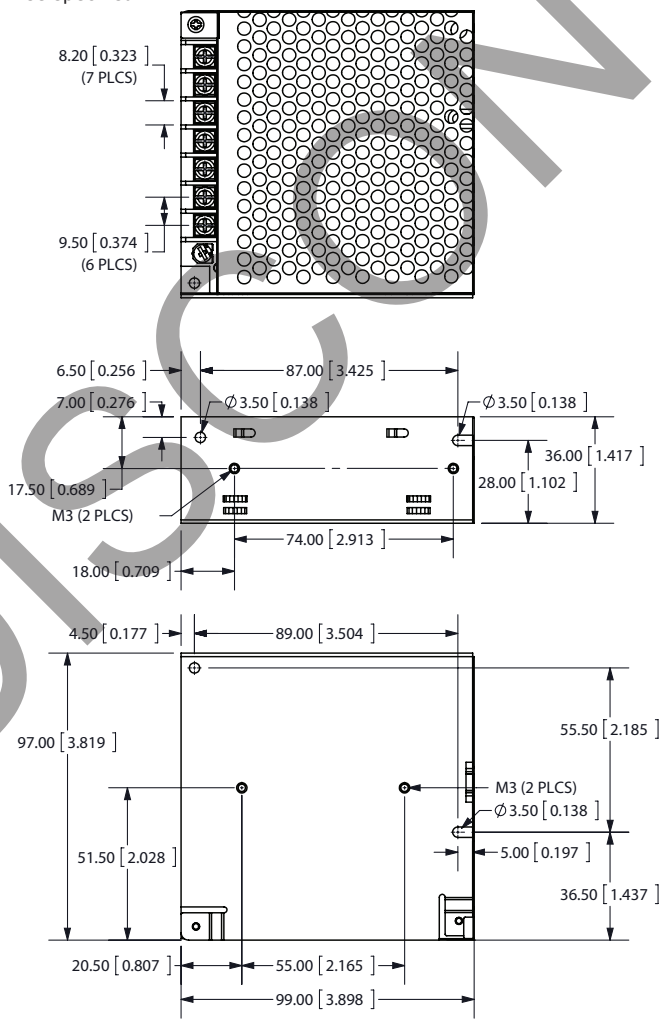

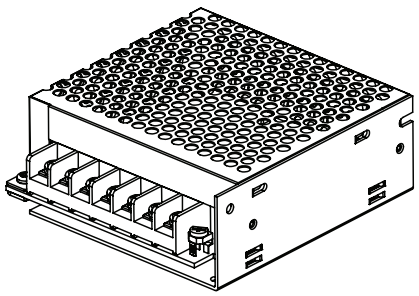

PIN CONNECTIONS	
Pin	Function
1	ac line
2	ac natural
3	FG ⏚
4	COM
5	+V2
6	COM
7	+V1

DISCONTINUED

REVISION HISTORY

rev.	description	date
1.0	initial release	10/26/2011
1.01	updated capacitor values for ripple measurements	04/20/2012
1.02	V-Infinity branding removed	08/21/2012
1.03	added minimum current requirements	11/04/2013
1.04	updated datasheet	07/10/2018

The revision history provided is for informational purposes only and is believed to be accurate.

DISCONTINUED

CUI INC

Headquarters
20050 SW 112th Ave.
Tualatin, OR 97062
800.275.4899

Fax 503.612.2383
cui.com
techsupport@cui.com

CUI offers a two (2) year limited warranty. Complete warranty information is listed on our website.

CUI reserves the right to make changes to the product at any time without notice. Information provided by CUI is believed to be accurate and reliable. However, no responsibility is assumed by CUI for its use, nor for any infringements of patents or other rights of third parties which may result from its use.

CUI products are not authorized or warranted for use as critical components in equipment that requires an extremely high level of reliability. A critical component is any component of a life support device or system whose failure to perform can be reasonably expected to cause the failure of the life support device or system, or to affect its safety or effectiveness.