SERIES: VDSD1-DIP | DESCRIPTION: DC-DC CONVERTER

DISCONTINUED

FEATURES

- 1 W isolated output
- industry standard 14 pin DIP package
- dual unregulated outputs
- 1,000 V isolation
- short circuit protection
- UL safety approvals
- wide temperature (-40~85°C)
- efficiency up to 81%



MODEL

MODEL	input voltage typ (Vdc)	input voltage range (Vdc)	output voltage (Vdc)	output current min (mA)	output current max (mA)	output power max (W)	ripple and noise[1] max (mVp-p)	efficiency typ (%)	UL60950-1
VDSD1-S5-DI5-DIP	5	4.5~5.5	±5	±10	±100	1	75	72	YES
VDSD1-S5-DI9-DIP	5	4.5~5.5	±9	±6	±56	1	75	75	YES
VDSD1-S5-DI12-DIP	5	4.5~5.5	±12	±4	±42	1	75	78	YES
VDSD1-S5-DI15-DIP	5	4.5~5.5	±15	±3	±33	1	75	79	YES
VDSD1-S12-DI5-DIP	12	10.8~13.2	±5	±10	±100	1	75	74	YES
VDSD1-S12-DI9-DIP	12	10.8~13.2	±9	±6	±56	1	75	76	YES
VDSD1-S12-DI12-DIP	12	10.8~13.2	±12	±4	±42	1	75	79	YES
VDSD1-S12-DI15-DIP	12	10.8~13.2	±15	±3	±33	1	75	80	YES
VDSD1-S15-DI5-DIP	15	13.5~16.5	±5	±10	±100	1	75	74	NO
VDSD1-S15-DI9-DIP	15	13.5~16.5	±9	±6	±56	1	75	75	NO
VDSD1-S15-DI12-DIP	15	13.5~16.5	±12	±4	±42	1	75	79	NO
VDSD1-S15-DI15-DIP	15	13.5~16.5	±15	±3	±33	1	75	79	NO
VDSD1-S24-DI5-DIP	24	21.6~26.4	±5	±10	±100	1	75	74	YES
VDSD1-S24-DI9-DIP	24	21.6~26.4	±9	±6	±56	1	75	76	YES
VDSD1-S24-DI12-DIP	24	21.6~26.4	±12	±4	±42	1	75	80	YES
VDSD1-S24-DI15-DIP	24	21.6~26.4	±15	±3	±33	1	75	81	YES

Notes: 1. ripple and noise are measured at 20 MHz BW

PART NUMBER KEY

VDSD1 - SXX - DIXX -DIP

Base Number | Input Voltage | Output Voltage | Packaging Style

Please read our datasheet & drawing disclaimer here.

INPUT

parameter	conditions/description	min	typ	max	units
operating input voltage	5 V model	4.5	5	5.5	Vdc
	12 V model	10.8	12	13.2	Vdc
	15 V model	13.5	15	16.5	Vdc
	24 V model	21.6	24	26.4	Vdc

OUTPUT

parameter	conditions/description	min	typ	max	units
line regulation	for Vin change of 1%			1.2	%
load regulation	measured from 10% load to full load			15	%
voltage accuracy	see derating curves				
switching frequency	100% load, input voltage range	80	100	200	kHz
temperature coefficient			±0.03		%/°C

PROTECTIONS

parameter	conditions/description	min	typ	max	units
short circuit protection				1	s

SAFETY AND COMPLIANCE

parameter	conditions/description	min	typ	max	units
isolation voltage	for 1 minute at 1 mA max.	1,000			Vdc
isolation resistance	at 500 Vdc	1,000			MΩ
safety approvals[1]	UL 60950-1 (E222736)				
MTBF		3,500,000			hours
RoHS compliant	yes				
burn-in	full load at +85°C, for 4 hours at no-load and 4 hours at full load				

ENVIRONMENTAL

parameter	conditions/description	min	typ	max	units
operating temperature		-40		85	°C
storage temperature		-55		125	°C
storage humidity	non-condensing			95	%
temperature rise	at full load		15	25	°C
lead temperature	1.5 mm from case for 10 seconds			300	°C

DISCONTINUED

DERATING CURVES

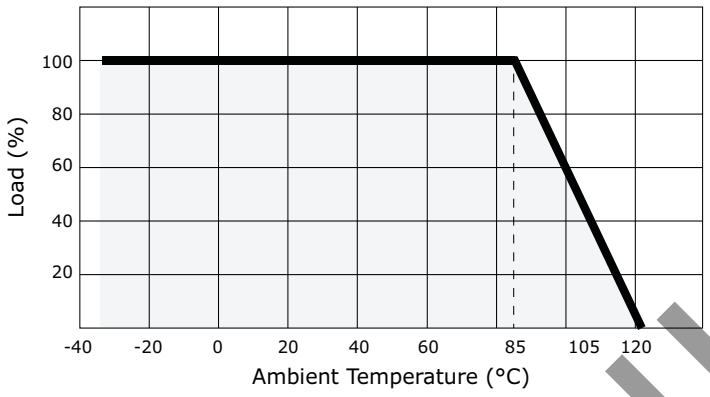

MECHANICAL

parameter	conditions/description	min	typ	max	units
dimensions	20.40 x 10.00 x 7.00 (0.803 x 0.394 x 0.276 inch)				mm
case material	plastic (UL94-V0)				
weight			2.1		g

MECHANICAL DRAWING

units: mm
tolerance: ±1 mm
pin section tolerance: ±0.10 mm

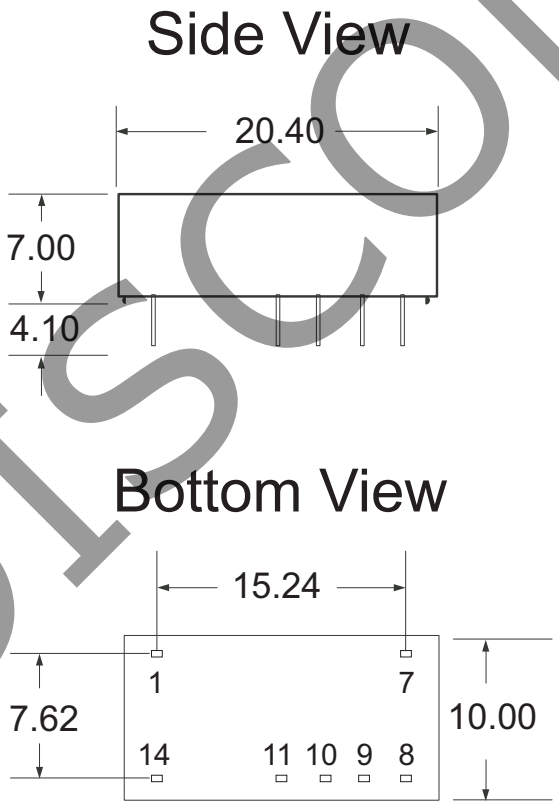

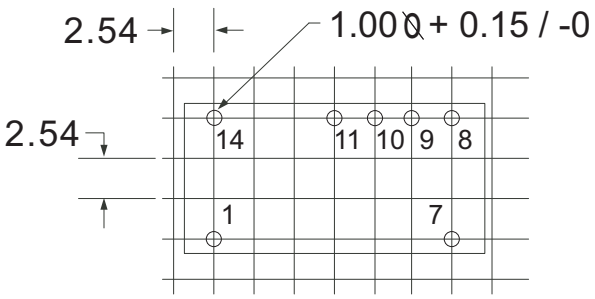

PIN CONNECTIONS	
PIN	FUNCTION
1	-Vin
7	NC
8	+Vo2
9	-Vo2
10	+Vo2
11	-Vo2
14	+Vin

DISCONTINUED

APPLICATION NOTES

1. **Input filtering**
To reduce the reflected ripple current and minimize EMI, especially when the converter input is more than 2" away from the DC source, it is recommended to connect a low ESR electrolytic capacitor between Vin and Gnd. The values suggested are as shown in Table 1. If additional filtering is required, the capacitance may be increased, or expanded to an LC network as shown in Figure 1.

Table 1

Input Voltage	External Input Capacitance
5 V	4.7 µF
12 V	2.2 µF
15 V	2.2 µF
24 V	1.0 µF



Figure 1

2. **Output filtering**
An output capacitor is needed to meet output ripple requirements as shown in Table 2. Output capacitance may be increased for additional filtering, but should not exeed 10µF or expanded to an LC network as in Figure 1.

Table 2

Output Voltage	External Input Capacitance
5 V	10 µF
9 V	4.7 µF
12 V	2.2 µF
15 V	1.0 µF
24 V	0.47 µF

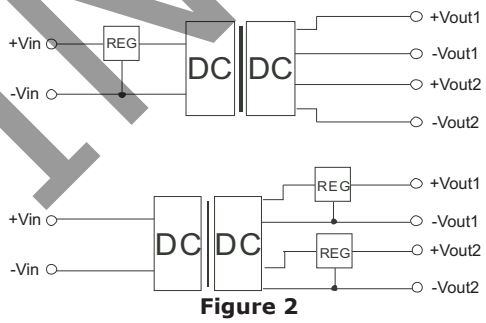

Figure 2

3. **Minimum loading**
The converter needs a minimum of 10% loading to maintain output regulation. Operation under no-load conditions will not cause immediate damages but may reduce reliability, and cause performance not to meet specifications.

4. **Regulation**
With a semi-regulated design, the converter's output voltage varies with load current and will change proportionally to the input voltage. If regulated output is needed, an external regulator can be used as shown in Figure 2.

5. **Protection**
The converter has minimal protection against input over-voltage or output over-load, and may be permanently damaged if exposed to these conditions. An input clamping device can be used for input voltage limiting. An input fuse or an output fuse can also be used to protect against over-loading.

6. **Dual outputs used as a single output**
The +Vout and -Vout can be used to obtain a single output that is the sum of the two outputs. In this case, the COM pin shouldn't be used.

7. **External Regulator**
An external 3-terminal regulator can be connected to the output of the converter to achieve full regulation. Make sure the converter's output voltage provides sufficient head room for the regulator. An additional benefit is that the built-in protection features in the regulator, such as OCP, OTP, etc, will protect the converter also. In a complimentory supply, a negative output regulator must be used to achieve the negative regulated output.

DISCONTINUED

Note: All specifications measured at 25°C, humidity <75%, nominal input voltage, and full load unless otherwise noted.

REVISION HISTORY

rev.	description	date
1.0	initial release	05/12/2006
1.01	new template applied	09/04/2009
1.02	new template applied, V-Infinity branding removed	09/07/2012
1.03	corrected part numbers	11/29/2012
1.04	updated spec	07/11/2013

The revision history provided is for informational purposes only and is believed to be accurate.

DISCONTINUED

CUI INC®

Headquarters
20050 SW 112th Ave.
Tualatin, OR 97062
800.275.4899

Fax 503.612.2383
cui.com
techsupport@cui.com

CUI offers a two (2) year limited warranty. Complete warranty information is listed on our website.

CUI reserves the right to make changes to the product at any time without notice. Information provided by CUI is believed to be accurate and reliable. However, no responsibility is assumed by CUI for its use, nor for any infringements of patents or other rights of third parties which may result from its use.

CUI products are not authorized or warranted for use as critical components in equipment that requires an extremely high level of reliability. A critical component is any component of a life support device or system whose failure to perform can be reasonably expected to cause the failure of the life support device or system, or to affect its safety or effectiveness.