SERIES: PYBJ6 | DESCRIPTION: DC-DC CONVERTER

FEATURES

- up to 6 W isolated output
- 2:1 input voltage range
- single regulated output
- output short circuit, over current, over voltage protection
- efficiency up to 86%
- DIP and SMT mounting styles
- available with or without case
- 1500 Vdc isolation
- certified to UL 62368-1
- designed to meet EN/BS EN 62368-1

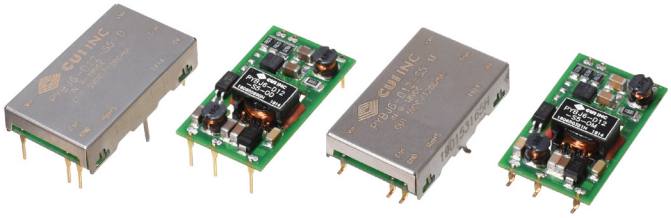

MODEL

MODEL	input voltage typ (Vdc)	input voltage range (Vdc)	output voltage (Vdc)	output current min (mA)	output current max (mA)	output power max (W)	ripple & noise[1] max (mVp-p)	efficiency[2] typ (%)
PYBJ6-D12-S5	12	9~18	5	0	1200	6	100	81
PYBJ6-D12-S12	12	9~18	12	0	500	6	100	84
PYBJ6-D12-S15	12	9~18	15	0	400	6	100	85
PYBJ6-D24-S3	24	18~36	3.3	0	1500	4.95	100	79
PYBJ6-D24-S5	24	18~36	5	0	1200	6	100	83
PYBJ6-D24-S12	24	18~36	12	0	500	6	100	85
PYBJ6-D24-S15	24	18~36	15	0	400	6	100	86

Notes:
1. From 5~100% load, nominal input, 20 MHz bandwidth oscilloscope, with 10 μF tantalum and 1 μF ceramic capacitors on the output. From 0~5% load, ripple and noise is <5% Vo.
2. Measured at nominal input voltage, full load.
3. All specifications are measured at Ta=25°C, humidity < 75%, nominal input voltage, and rated output load unless otherwise specified.

PART NUMBER KEY

PYBJ6 - DXX - SXX - X X

- PYBJ6: Base Number
- DXX: Input Voltage
- SXX: Output Voltage
- X: Case: "blank" = with case; O = no case
- X: Mounting Style: D = DIP; M = SMT

Please read our datasheet & drawing disclaimer here.

INPUT

parameter	conditions/description		min	typ	max	units
operating input voltage	12 Vdc input models 24 Vdc input models		9 18	12 24	18 36	Vdc Vdc
start-up voltage	12 Vdc input models 24 Vdc input models				9 18	Vdc Vdc
surge voltage	12 Vdc input models for 1 second max 24 Vdc input models for 1 second max		-0.7 -0.7		25 50	Vdc Vdc
under voltage shutdown	12 Vdc input models 24 Vdc input models		5.5 13	6.5 15		Vdc Vdc
current	12 Vdc input models	5 Vdc output models 12 Vdc output models 15 Vdc output models			633 610 603	mA mA mA
	24 Vdc input models	3.3 Vdc output models 5 Vdc output models 12 Vdc output models 15 Vdc output models			268 308 302 298	mA mA mA mA
remote on/off (CTRL)[4]	turn on (CTRL pin open or pulled low to GND (0~0.3 Vdc)) turn off (CTRL pin pulled high (2.0~12 Vdc)) input current when switched off			5	10	mA
filter	Pi filter					
no load power consumption				0.12		W

Notes: 4. The voltage of the CTRL pin is referenced to input GND pin.

OUTPUT

parameter	conditions/description	min	typ	max	units
maximum capacitive load[5]	3.3 Vdc output models 5 Vdc output models 12 Vdc output models 15 Vdc output models			1,800 1,000 680 470	µF µF µF µF
voltage accuracy	from 0% to full load		±1	±3	%
line regulation	from low line to high line, full load		±0.2	±0.5	%
load regulation[6]	from 5% to full load		±0.5	±1	%
adjustability	see application notes		±5		%
switching frequency[7]	PWM mode		330		kHz
transient recovery time	25% load step change, nominal input voltage		300	500	µs
transient response deviation	25% load step change, nominal input voltage 3.3, 5 Vdc output models all other output models		 ±5 ±3	 ±8 ±5	 % %
temperature coefficient	at full load			±0.03	%/°C

Note: 5. Tested at input voltage range and full load.
6. At 0~100% load, the max load regulation is ±5%.
7. Value is based on full load. At loads <50%, the switching frequency decreases with decreasing load for efficiency improvement.

PROTECTIONS

parameter	conditions/description	min	typ	max	units
over voltage protection	output shut down	110		160	%
over current protection	hiccup, auto recovery	110	140	200	%
short circuit protection	hiccup, continuous, auto recovery				

SAFETY AND COMPLIANCE

parameter	conditions/description	min	typ	max	units
isolation voltage	input to output for 1 minute at 5 mA	500			Vac
	input to case[8] for 1 minute at 5 mA	500			Vac
	output to case[8] for 1 minute at 5 mA	500			Vac
	input to output for 1 minute at 1 mA	1,500			Vdc
	input to case[8] for 1 minute at 1 mA	1,500			Vdc
	output to case[8] for 1 minute at 1 mA	1,500			Vdc
isolation resistance	input to output at 500 Vdc	100			MΩ
	input to case[8] at 500 Vdc	100			MΩ
	output to case[8] at 500 Vdc	100			MΩ
isolation capacitance	input to output, 100 kHz / 0.1 V		1,000		pF
safety approvals	certified to 62368-1: UL designed to meet 62368-1: EN, BS EN				
conducted emissions	CISPR32/EN55032, class A (no external circuit); class B (external circuit required, see Figure 3)				
radiated emissions	CISPR32/EN55032, class B (external circuit required, see Figure 4)				
ESD	IEC/EN61000-4-2, contact ±6 kV, class B				
radiated immunity	IEC/EN61000-4-3, 10 V/m, class A				
EFT/burst	IEC/EN61000-4-4, ±2 kV, class B (external circuit required, see Figure 2)				
surge	IEC/EN61000-4-5, line-line ±2 kV, class B (external circuit required, see Figure 2)				
conducted immunity	IEC/EN61000-4-6, 3 Vr.m.s, class A				
MTBF	as per MIL-HDBK-217F, 25°C	1,000,000			hours
RoHS	yes				

Note: 8. Only applies to versions with case.

ENVIRONMENTAL

parameter	conditions/description	min	typ	max	units
operating temperature	see derating curves	-40		85	°C
storage temperature		-55		125	°C
storage humidity	non-condensing	5		95	%
vibration	10~150 Hz, for 90 minutes on each axis		5		G

DERATING CURVES

TEMPERATURE DERATING CURVE

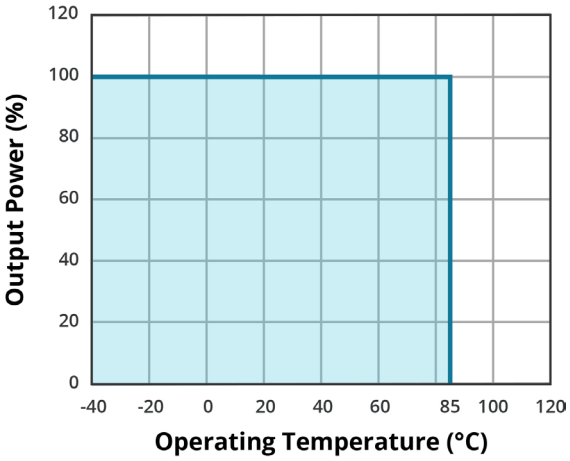

SOLDERABILITY

parameter	conditions/description	min	typ	max	units
hand soldering	1.5 mm from case for 10 seconds			300	°C
wave soldering[9]	see wave soldering profile			260	°C
reflow soldering[10]	see reflow soldering profile Maximum duration >217°C is 60 seconds. For actual application, refer to IPC/JEDEC J-STD-020D.1			245	°C

Note: 9. For DIP models only.
10. For SMT models only.

WAVE SOLDERING PROFILE (DIP models)

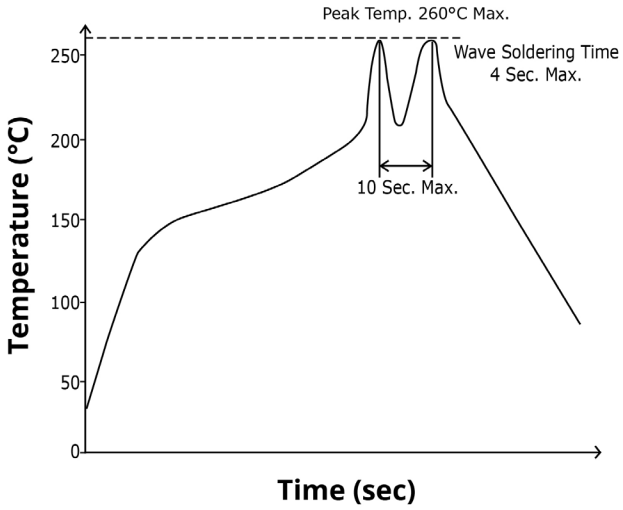

REFLOW SOLDERING PROFILE (SMT models)

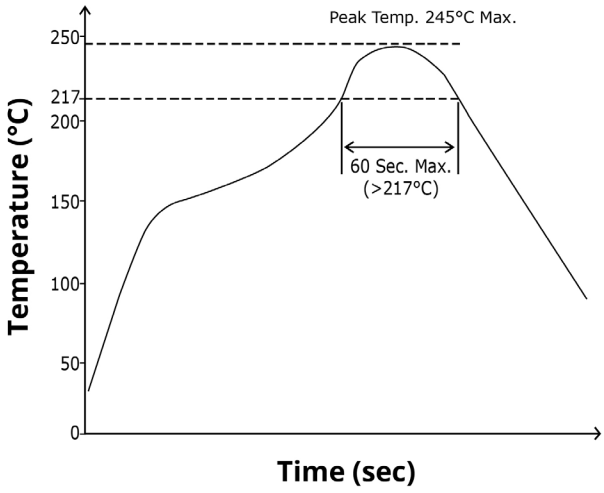

MECHANICAL

parameter	conditions/description	min	typ	max	units
dimensions	DIP without case: 31.60 x 18.10 x 6.10 [1.244 x 0.713 x 0.240 inch]				mm
	DIP with case: 32.60 x 19.10 x 6.80 [1.283 x 0.752 x 0.268 inch]				mm
	SMT without case: 31.60 x 18.10 x 6.30 [1.244 x 0.713 x 0.248 inch]				mm
	SMT with case: 32.60 x 19.10 x 7.00 [1.283 x 0.752 x 0.276 inch]				mm
case material	aluminum alloy				
weight	models without case		4.7		g
	models with case		5.7		g

MECHANICAL DRAWING (DIP WITHOUT CASE)

units: mm [inch]
tolerance: ±0.50[±0.020]
pin section tolerance: ±0.10[±0.004]

PIN CONNECTIONS	
PIN	Function
1	Vin
2	CTRL
3	GND
4	0V
5	trim
6	+Vo

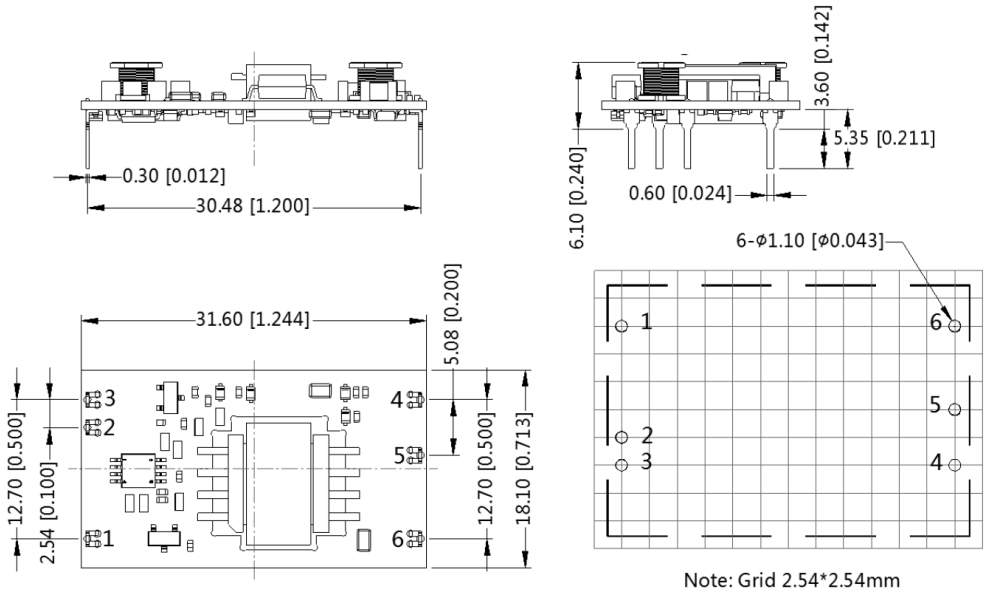

Note: Grid 2.54*2.54mm
Recommended PCB Layout
Top View

MECHANICAL DRAWING (DIP WITH CASE)

units: mm [inch]
tolerance: ±0.50[±0.020]
pin section tolerance: ±0.10[±0.004]

PIN CONNECTIONS	
PIN	Function
1	Vin
2	CTRL
3	GND
4	0V
5	trim
6	+Vo

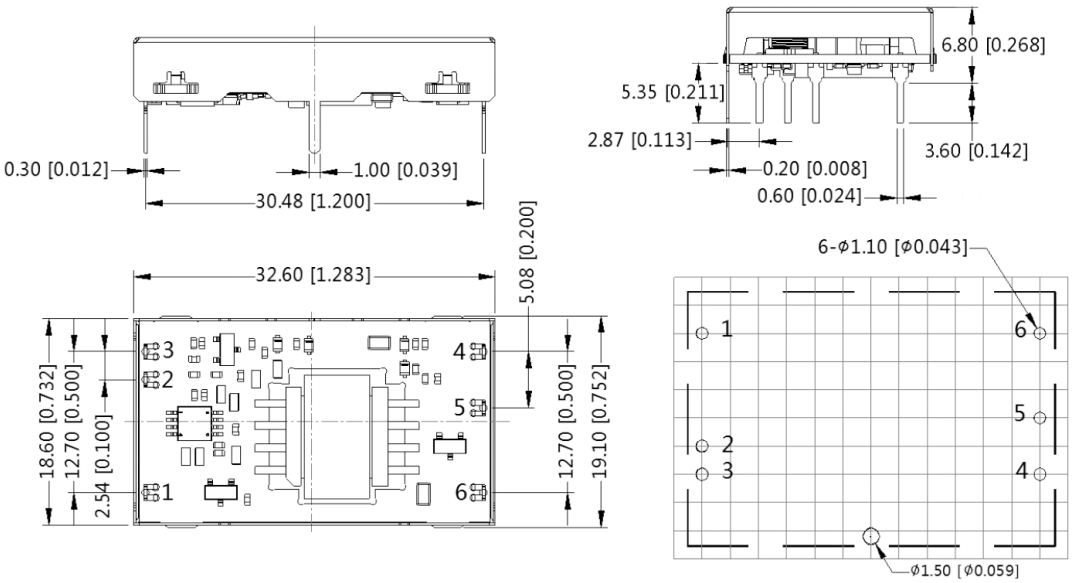

Note: Grid 2.54*2.54mm
Recommended PCB Layout
Top View

MECHANICAL DRAWING (SMT WITHOUT CASE)

units: mm [inch]
tolerance: ±0.50[±0.020]
pin section tolerance: ±0.10[±0.004]

PIN CONNECTIONS	
PIN	Function
1	Vin
2	CTRL
3	GND
4	0V
5	trim
6	+Vo

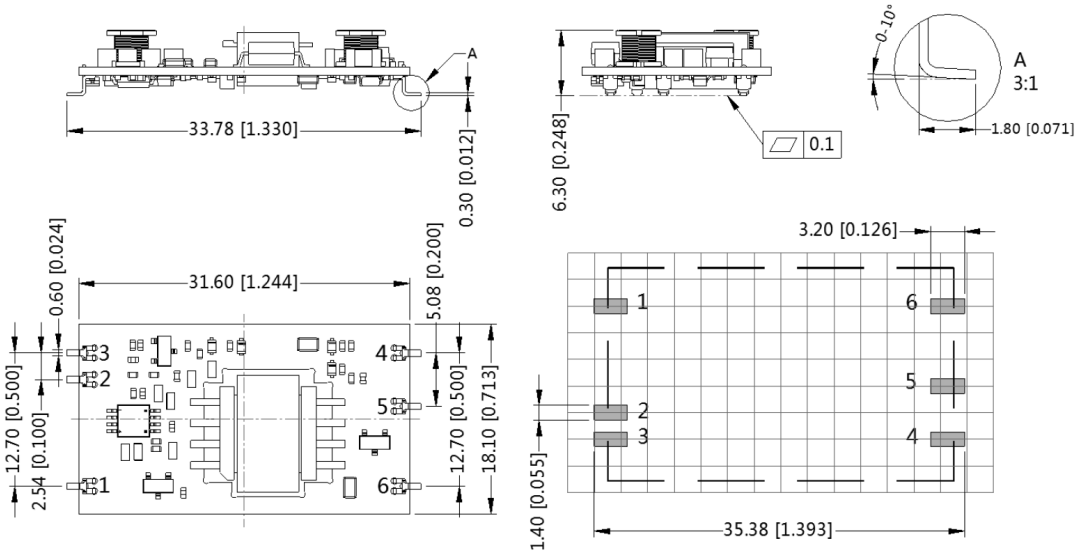

Note: Grid 2.54*2.54mm
Recommended PCB Layout
Top View

MECHANICAL DRAWING (SMT WITH CASE)

units: mm [inch]
tolerance: ±0.50[±0.020]
pin section tolerance: ±0.10[±0.004]

PIN CONNECTIONS	
PIN	Function
1	Vin
2	CTRL
3	GND
4	0V
5	trim
6	+Vo

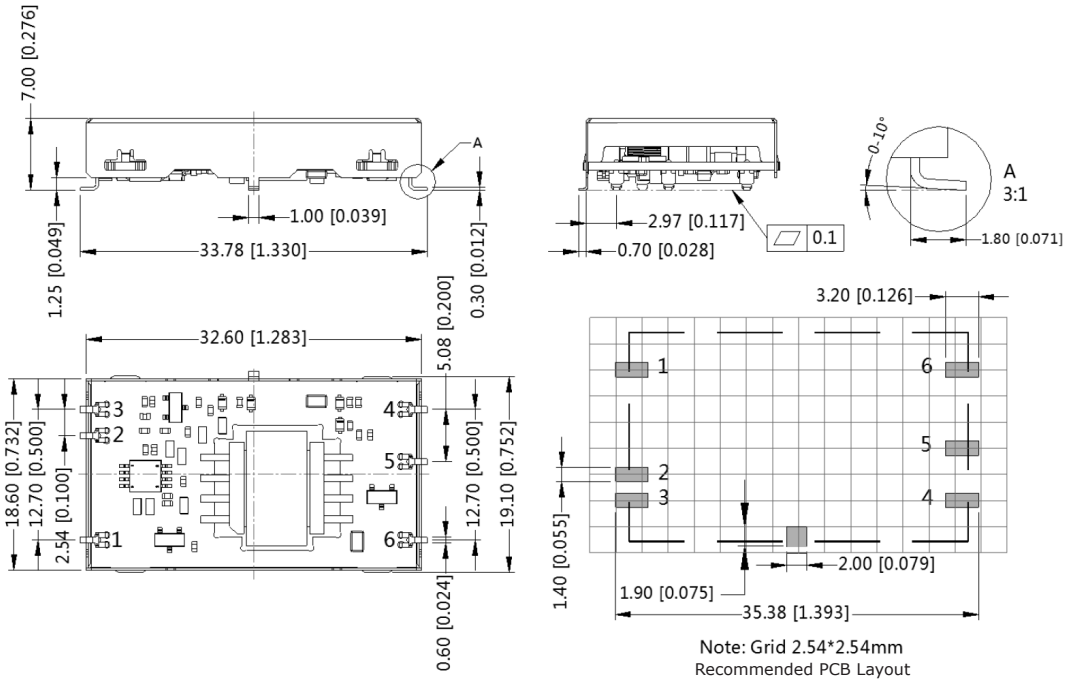

Note: Grid 2.54*2.54mm
Recommended PCB Layout
Top View

APPLICATION CIRCUIT

This series has been tested according to the following recommended circuit (Figure 1) before leaving the factory. If you want to further reduce the input and output ripple, you can increase the input and output capacitors or select capacitors of low equivalent impedance provided that the capacitance is less than the maximum capacitive load of the model.

Figure 1

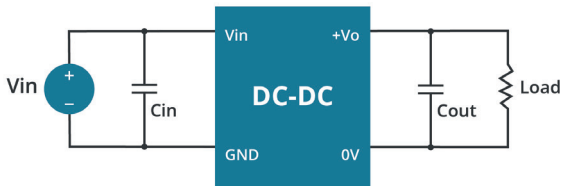

Table 1

Vout (Vdc)	Cin (µF)	Cout (µF)
3.3/5/12/15	10	10

EMC RECOMMENDED CIRCUIT

Figure 2

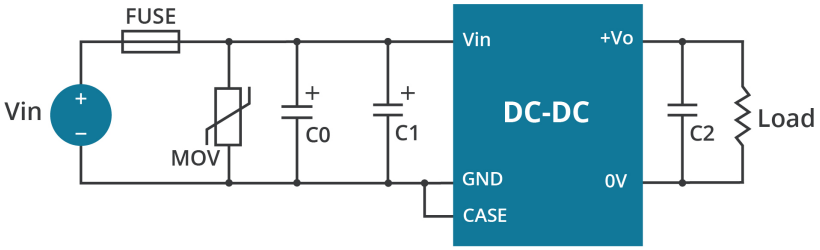

Table 2

Recommended External Circuit Components	
Vin (Vdc)	12, 24
FUSE	choose according to actual input current
MOV	S20K30
C0	680 µF / 100 V
C1	330 µF / 25 V
C2	10 µF / 25 V

Figure 3

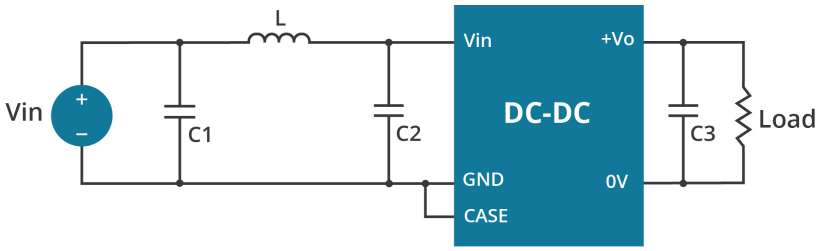

Table 3

Recommended External Circuit Components	
Vin (Vdc)	12, 24
C1, C2	4.7 µF / 50 V
L	4.7 µH
C3	10 µF / 25 V

Figure 4

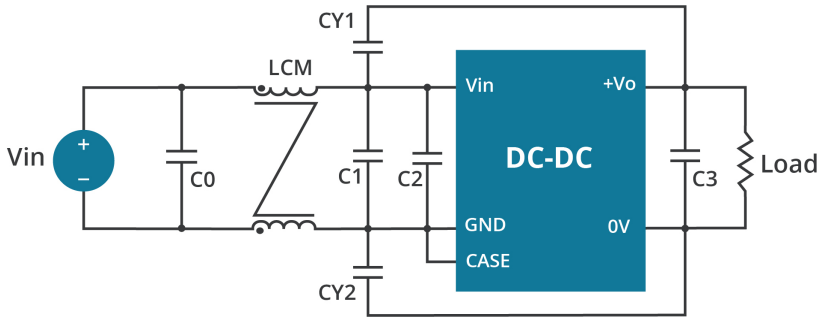

Table 4

Recommended External Circuit Components	
Vin (Vdc)	12, 24
C0	4.7 µF / 50 V
C1	4.7 µF / 50 V
C2	4.7 µF / 50 V
C3	10 µF / 25 V
LCM	3.3 mH
CY1, CY2	1000 pF / ≥2000 Vdc

APPLICATION NOTES

Output voltage trimming
Leave open if not used.

Figure 5

Trim up

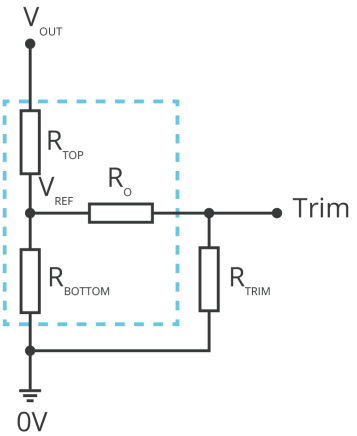

Trim down

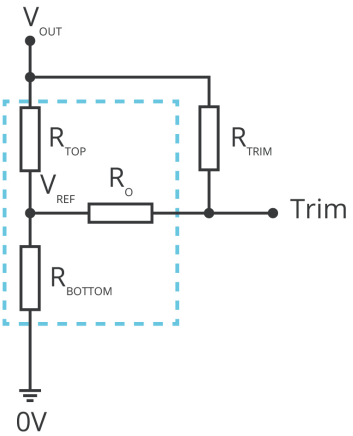

$$R_{TRIM} = \frac{a \cdot R_{BOTTOM}}{R_{BOTTOM} - a} - R_O \qquad a = \frac{V_{REF}}{V_{OUT} - V_{REF}} \cdot R_{TOP}$$

Formula for Trim up

$$R_{TRIM} = \frac{a \cdot R_{TOP}}{R_{TOP} - a} - R_O \qquad a = \frac{V_{OUT} - V_{REF}}{V_{REF}} \cdot R_{BOTTOM}$$

Formula for Trim down

Table 5

V_{OUT}	R_{TOP}	R_{BOTTOM}	R_O	V_{REF}
(Vdc)	(kΩ)	(kΩ)	(kΩ)	(V)
PYBJ6-D12-S5	2.94	2.87	10	2.5
PYBJ6-D12-S12	11	2.87	15	2.5
PYBJ6-D12-S15	14.5	2.87	15	2.5
PYBJ6-D24-S3	4.8	2.87	12	1.24
PYBJ6-D24-S5	2.94	2.87	15	2.5
PYBJ6-D24-S12	11.0	2.87	33	2.5
PYBJ6-D24-S15	14.5	2.87	15	2.5

Note: Value for R_{TOP}, R_{BOTTOM}, R_O, and V_{REF} refer to Table 3 (fixed internal values).
R_{TRIM}: Trim resistance
a: User-defined parameter, no actual meanings
V_{OUT}: Nominal output voltage

REVISION HISTORY

rev.	description	date
1.0	initial release	06/24/2019
1.01	packaging removed, safeties updated in features and safety line	01/14/2021
1.02	derating curve and circuit figures updated	07/20/2021
1.03	CE certification removed	12/05/2022
1.04	remote on/off updated	08/16/2023

The revision history provided is for informational purposes only and is believed to be accurate.

CUI INC
a bel group

Headquarters
20050 SW 112th Ave.
Tualatin, OR 97062
800.275.4899

Fax 503.612.2383
cui.com
techsupport@cui.com

CUI offers a two (2) year limited warranty. Complete warranty information is listed on our website.

CUI reserves the right to make changes to the product at any time without notice. Information provided by CUI is believed to be accurate and reliable. However, no responsibility is assumed by CUI for its use, nor for any infringements of patents or other rights of third parties which may result from its use.

CUI products are not authorized or warranted for use as critical components in equipment that requires an extremely high level of reliability. A critical component is any component of a life support device or system whose failure to perform can be reasonably expected to cause the failure of the life support device or system, or to affect its safety or effectiveness.