SERIES: PSK-S5B | **DESCRIPTION:** AC-DC POWER SUPPLY

FEATURES

- universal input range (85 ~ 264 Vac)
- wide operating temperature range (-40 to +70 °C)
- 4K Vac minimum isolation voltage
- over-current, over-voltage, and short-circuit protection
- low-profile encapsulated package (18 mm / 0.709")
- 85 mm (3.346") leaded configuration available with "-L" suffix
- chassis-mount configuration available with "-T" suffix
- DIN-rail configuration available with "-DIN" suffix

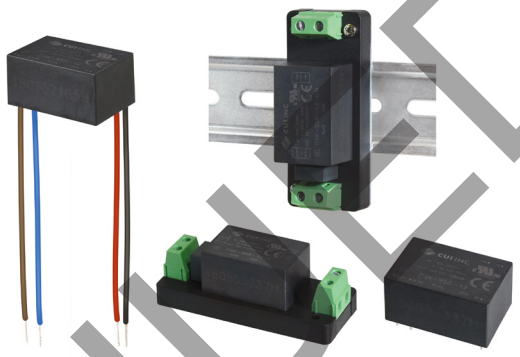

DISCONTINUED

MODEL

MODEL	output voltage (Vdc)	output current min (mA)	output current max (mA)	output power max (W)	ripple and noise[1] max (mVp-p)	efficiency[2] typ (%)
PSK-S5B-3[4,5,6,7]	3.3	0	1000	3.3	100	68
PSK-S5B-5[4,5,6]	5	0	1000	5	100	75
PSK-S5B-9[4,5,6,7]	9	0	560	5	100	77
PSK-S5B-12[4,5,6,7]	12	0	420	5	100	79
PSK-S5B-15[4,5,6,7]	15	0	330	5	100	79
PSK-S5B-24[4,5,6,7]	24	0	210	5	100	81

Notes:
1. At full load, nominal input, 20 MHz bandwidth oscilloscope, with 1 µF ceramic and 10 µF electrolytic capacitors on the output.
2. At 230 Vac input.
3. All specifications are measured at Ta=25°C, humidity <75%, nominal input voltage, and rated output load unless otherwise specified.
4. Board mount option discontinued.
5. DIN-rail mount option discontinued.
6. Lead wires mount option discontinued.
7. Chassis mount option discontinued.

PART NUMBER KEY

PSK-S5B - XX - X

- PSK-S5B: Base Number
- XX: Output Voltage
- X: Mounting Style:
  "blank" = board mount
  L = lead wires
  T = chassis mount
  DIN = DIN-rail mount

Please read our datasheet & drawing disclaimer here.

INPUT

parameter	conditions/description	min	typ	max	units
voltage		85 100		264 370	Vac Vdc
frequency		47		63	Hz
current	at 115 Vac at 230 Vac			130 70	mA mA
inrush current	at 115 Vac at 230 Vac		10 20		A A
leakage current	at 230 Vac, 50 Hz		0.1		mA

OUTPUT

parameter	conditions/description	min	typ	max	units
capacitive load	3, 5 Vdc output models 9, 12 Vdc output models 15 Vdc output models 24 Vdc output models			5000 1200 1000 330	µF µF µF µF
initial set point accuracy	3.3 Vdc output models all other models		±3 ±2		% %
line regulation	at full load		±0.5		%
load regulation	from 0~100% load		±1		%
hold-up time	at 115 Vac at 230 Vac		5 50		ms ms
switching frequency			100		kHz
temperature coefficient			±0.02		%/°C

PROTECTIONS

parameter	conditions/description	min	typ	max	units
over voltage protection	3, 5 Vdc output models 9 Vdc output models 12, 15 Vdc output models 24 Vdc output models			7.5 15 20 30	Vdc Vdc Vdc Vdc
over current protection	auto recovery			120	%
short circuit protection	continuous, auto recovery				

SAFETY & COMPLIANCE

parameter	conditions/description	min	typ	max	units
isolation voltage	input to output for 1 minute	4,000			Vac
safety approvals	UL 62368-1, EN 62368-1, IEC 62368-1				
safety class	Class II				
conducted emissions	CISPR32/EN55032, Class A				
	CISPR32/EN55032, Class B (external circuit required, see Figure 2)				
radiated emissions	CISPR32/EN55032, Class A				
	CISPR32/EN55032, Class B (external circuit required, see Figure 2)				
ESD	IEC/EN61000-4-2, contact ±6 kV/ air ±8kV, Class B				
radiated immunity	IEC/EN61000-4-3, 10V/m, Class A				

DISCONTINUED

SAFETY & COMPLIANCE (CONTINUED)

parameter	conditions/description	min	typ	max	units
EFT/burst	IEC/EN61000-4-4, ±2 kV, Class B (external circuit required, see Figure 1)				
	IEC/EN61000-4-4, ±4 kV, Class B (external circuit required, see Figure 2)				
surge	IEC/EN61000-4-5, line to line ±1 kV, Class B (external circuit required, see Figure 1)				
	IEC/EN61000-4-5, line to line ±1 kV/line to ground ±4 kV, Class B (external circuit required, see Figure 2)				
conducted immunity	IEC/EN61000-4-6, 10 Vrms, Class A				
voltage dips & interruptions	IEC/EN61000-4-11 Class B, 0%-70%				
MTBF	as per MIL-HDBK-217F at 25°C	300,000			hours
RoHS	yes				

Notes: 4. The power supply is considered a component which will be installed into final equipment. The final equipment still must be tested to meet the necessary EMC directives.

ENVIRONMENTAL

parameter	conditions/description	min	typ	max	units
operating temperature	see derating curves	-40		70	°C
storage temperature		-40		105	°C
storage humidity	non-condensing			95	%

SOLDERABILITY[5]

parameter	conditions/description	min	typ	max	units
hand soldering	for 3~5 seconds	350	360	370	°C
wave soldering	for 5~10 seconds	255	260	265	°C

Notes: 5. For board mount models only

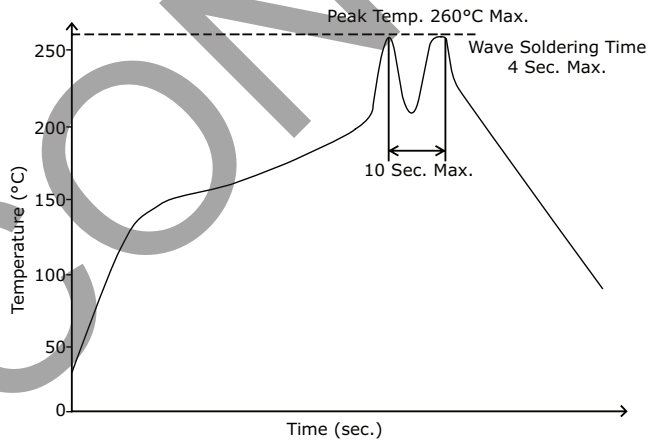

DISCONTINUED

DERATING CURVES

TEMPERATURE DERATING CURVE (85~264 Vac/100~370 Vdc)

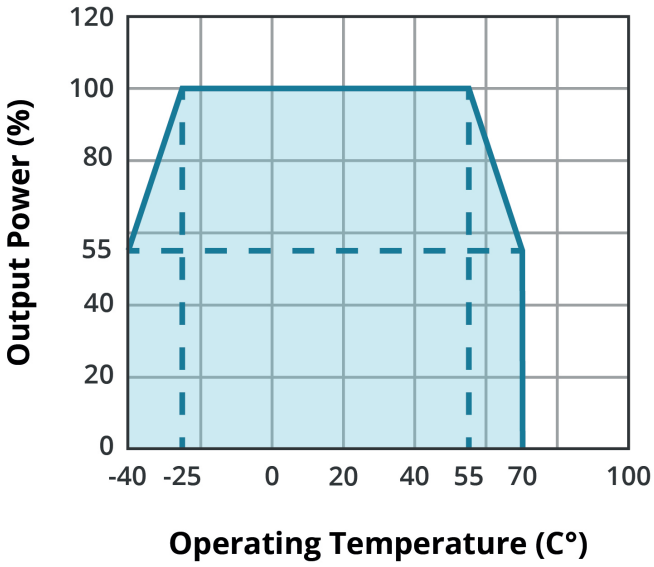

TEMPERATURE DERATING CURVE (25ºC)

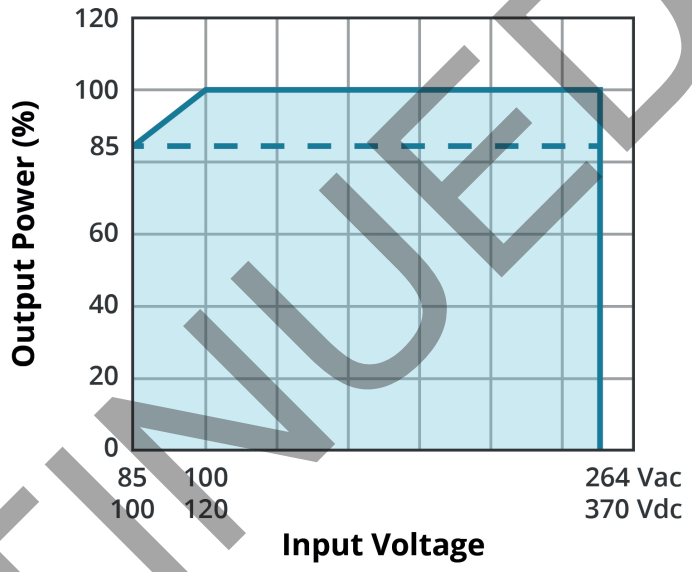

EFFICIENCY CURVES

EFFICIENCY VS INPUT VOLTAGE (Full load)

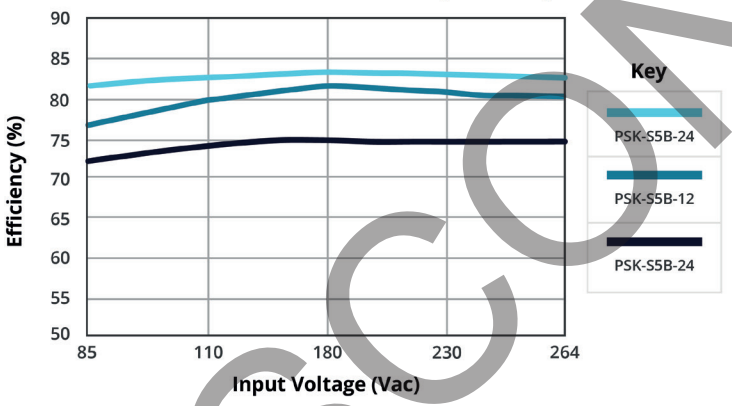

EFFICIENCY VS OUTPUT LOAD (Vin = 230 Vac)

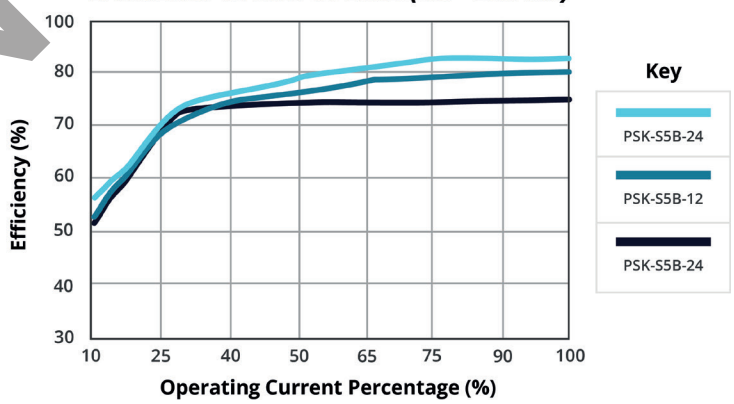

DISCONTINUED

MECHANICAL

parameter	conditions/description	min	typ	max	units
dimensions	board mount: 37.00 x 24.50 x 18.00 (1.457 x 0.965 x 0.709 inch) lead wires: 37.00 x 24.50 x 18.00 (1.457 x 0.965 x 0.709 inch) chassis mount: 76.00 x 31.50 x 26.80 (2.992 x 1.24 x 1.055 inch) DIN-Rail mount: 76.00 x 31.50 x 31.40 (2.992 x 1.24 x 1.236 inch)				mm mm mm mm
case material	black flame-retardant and heat-resistant plastic (UL94V-0)				
weight	board mount lead wires chassis mount DIN-Rail mount		25 25 47 69		g g g g

MECHANICAL DRAWING (BOARD MOUNT)

units: mm[inch]
tolerance: ±0.50[±0.020]
pin diameter tolerance: ±0.10[±0.004]

PIN CONNECTIONS	
PIN	Function
1	AC (L)
3	AC (N)
13	NC
14	-Vo
16	+Vo

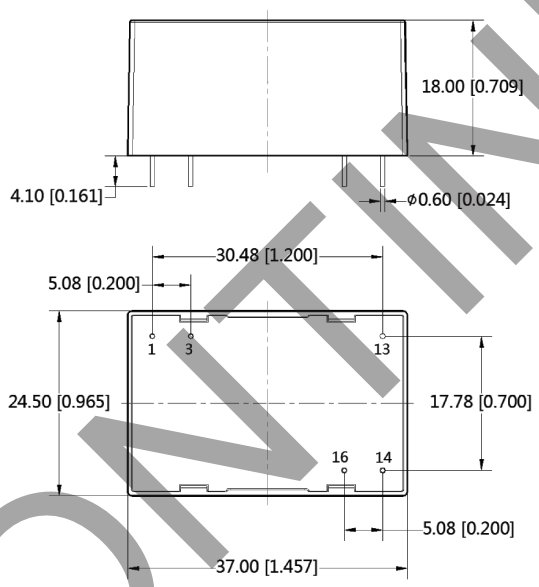

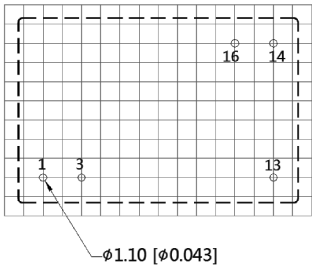

Note:Grid 2.54*2.54mm
Recommended PCB Layout
Top View

MECHANICAL DRAWING (LEAD WIRES)

units: mm [inch]
tolerance: ±0.50[±0.020]
wire diameter tolerance: ±0.30[±0.012]

WIRE CONNECTIONS			
PIN	COLOR	WIRE TYPE	Function
1	brown	UL-1015 22 AWG	AC (L)
3	blue	UL-1015 22 AWG	AC (N)
14	black	UL-1430 22 AWG	-Vo
16	red	UL-1430 22 AWG	+Vo

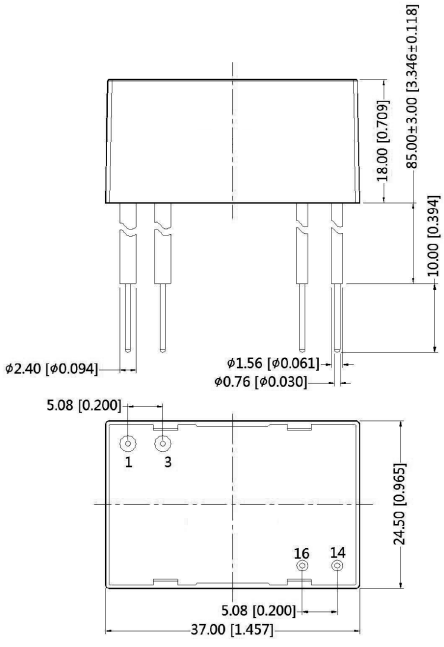

DISCONTINUED

MECHANICAL DRAWING (CHASSIS MOUNT)

units: mm[inch]
tolerance: ±0.50[±0.020]

wire range: 24~12 AWG
tightening torque: max 0.4 N*m

PIN CONNECTIONS	
PIN	Function
1	AC (N)
2	AC (L)
3	-Vo
4	+Vo

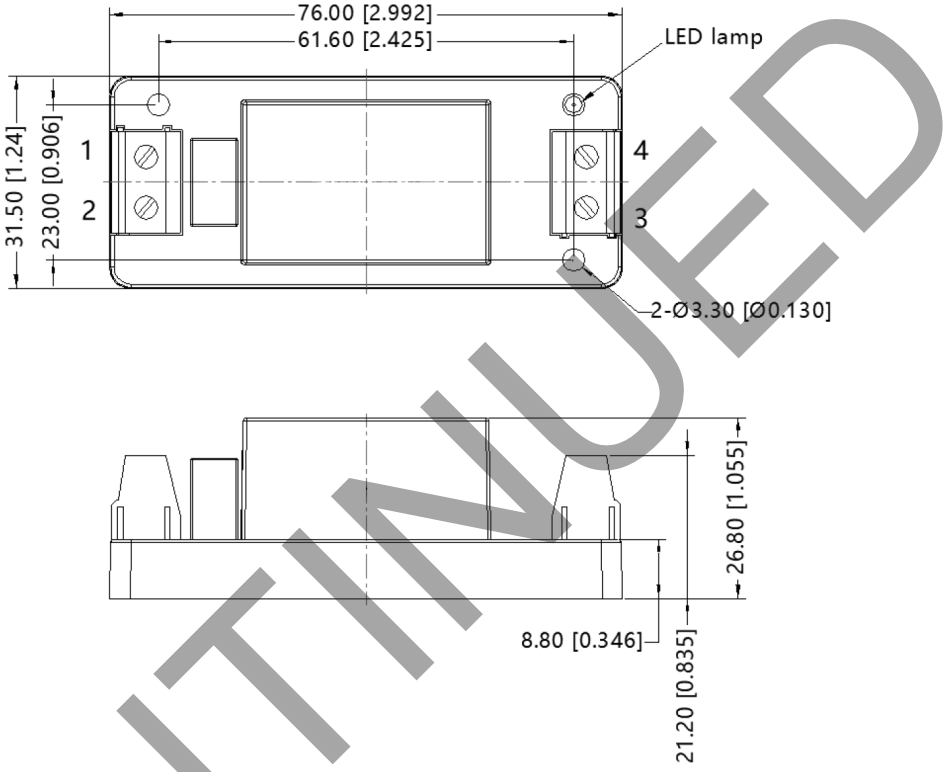

MECHANICAL DRAWING (DIN-RAIL MOUNT)

units: mm [inch]
tolerance: ±1.00[±0.039]

installed on DIN Rail TS35
wire range: 24~12 AWG
tightening torque: max 0.4 N*m

PIN CONNECTIONS	
PIN	Function
1	AC (N)
2	AC (L)
3	-Vo
4	+Vo

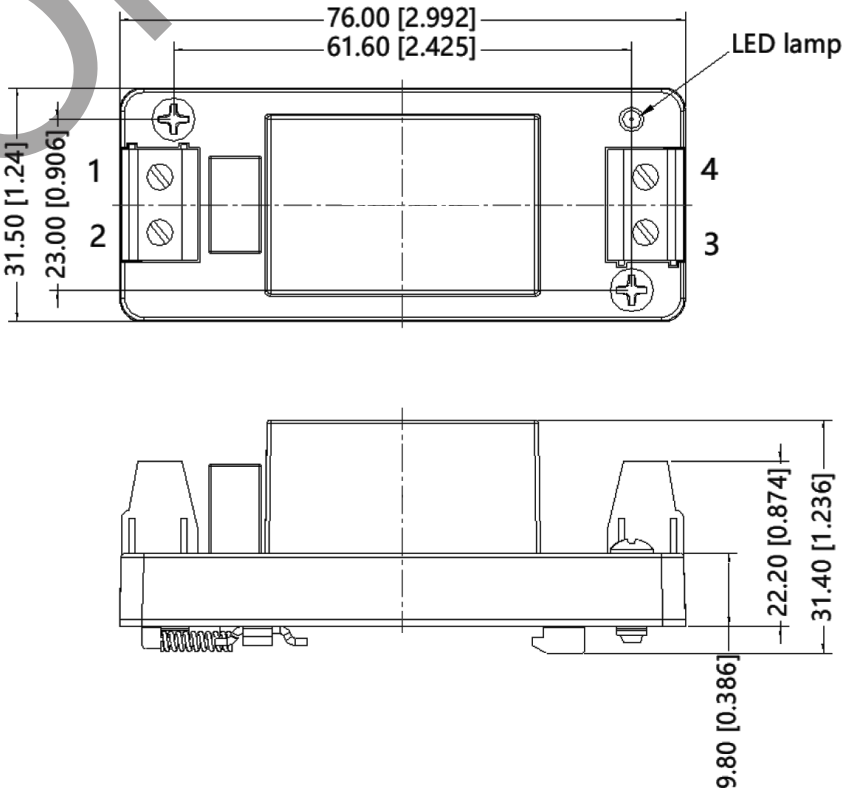

DISCONTINUED

APPLICATION CIRCUIT

Figure 1

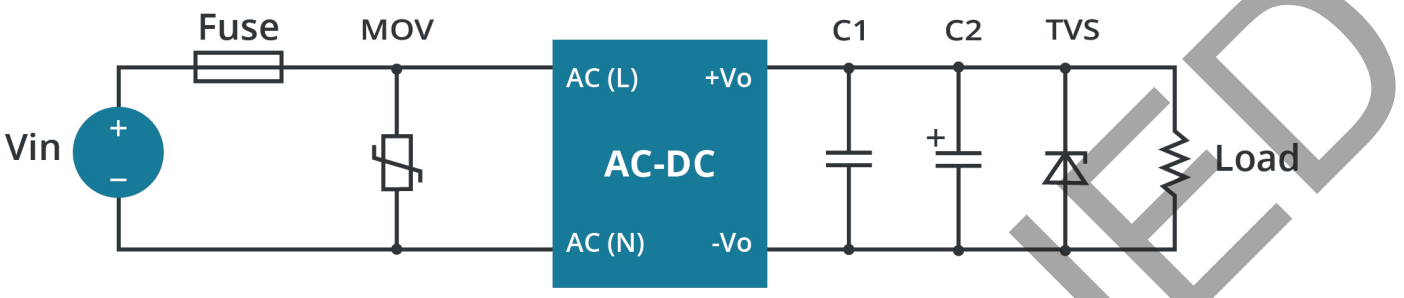

Table 1

Recommended External Circuit Components					
Vo (Vdc)	FUSE[6]	MOV[6]	C1	C2	TVS
3.3	1A/250V	S14K350	1 µF	150 µF	SMBJ7.0A
5	1A/250V	S14K350	1 µF	150 µF	SMBJ7.0A
9	1A/250V	S14K350	1 µF	120 µF	SMBJ12A
12	1A/250V	S14K350	1 µF	120 µF	SMBJ20A
15	1A/250V	S14K350	1 µF	120 µF	SMBJ20A
24	1A/250V	S14K350	1 µF	68 µF	SMBJ30A

Notes: 6. Chassis Mount and DIN-Rail Mount versions include the fuse and MOV components.

EMC RECOMMENDED CIRCUIT

Figure 2

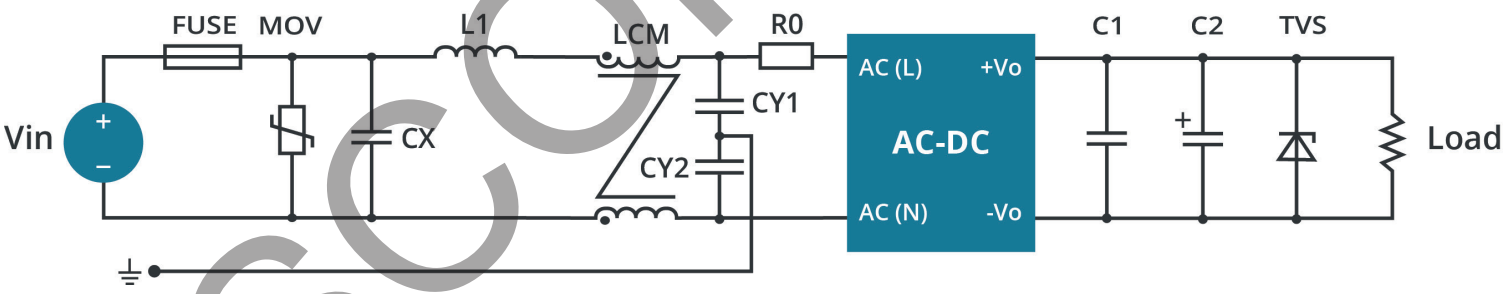

Table 2

Recommended External Circuit Components	
FUSE	2 A/250 V, slow fusing
MOV	S14K350
LCM	10~30 mH
CX	0.1 µF/275 Vac
L1	330 µH/ 2 A
CY1/CY2	1 nF/400 Vac
R0	33 Ω/3 W

Note: Also refer to Table 1.

Notes: 7. C1 is a ceramic capacitor used to filter high frequency noise.
8. C2 is an electrolytic capacitor and it is recommended to be high frequency and low impedance. For capacitance and current of capacitor, refer to the datasheet provided by the manufacturer. Voltage derating of capacitor should be at least 80%.
9. TVS is a recommended component to protect post-circuits (if converter fails).

DISCONTINUED

REVISION HISTORY

rev.	description	date
1.0	initial release	11/12/2018
1.01	company logo updated	02/05/2021
1.02	figures and circuit drawings updated	02/23/2021
1.03	UKCA mark added	05/27/2022
1.04	discontinued models PSK-S5B-3-DIN, PSK-S5B-5-DIN, PSK-S5B-9-DIN, PSK-S5B-12-DIN, PSK-S5B-15-DIN, PSK-S5B-24-DIN, PSK-S5B-5-L, PSK-S5B-3-T, PSK-S5B-9-T, PSK-S5B-15-T	06/29/2022
1.05	discontinued models PSK-S5B-3, PSK-S5B-3-L, PSK-S5B-5, PSK-S5B-5-L, PSK-S5B-9, PSK-S5B-9-L, PSK-S5B-12, PSK-S5B-12-L, PSK-S5B-12-T, PSK-S5B-15, PSK-S5B-15-L, PSK-S5B-24, PSK-S5B-24-L, PSK-S5B-24-T	09/13/2022

The revision history provided is for informational purposes only and is believed to be accurate.

DISCONTINUED

CUI INC
a bel group

Headquarters
20050 SW 112th Ave.
Tualatin, OR 97062
800.275.4899

Fax 503.612.2383
cui.com
techsupport@cui.com

CUI offers a two (2) year limited warranty. Complete warranty information is listed on our website.

CUI reserves the right to make changes to the product at any time without notice. Information provided by CUI is believed to be accurate and reliable. However, no responsibility is assumed by CUI for its use, nor for any infringements of patents or other rights of third parties which may result from its use.

CUI products are not authorized or warranted for use as critical components in equipment that requires an extremely high level of reliability. A critical component is any component of a life support device or system whose failure to perform can be reasonably expected to cause the failure of the life support device or system, or to affect its safety or effectiveness.