SERIES: PDRB-18 | **DESCRIPTION:** AC-DC DIN RAIL POWER SUPPLY

FEATURES

- universal input (90~264 Vac)
- integrated fuse and surge protection
- 3,000 Vac input/output isolation voltage
- DC ON/LOW LED indicators
- over voltage/current protection
- spring and screw terminal options
- adjustable output via trim POT
- UL/cUL, TUV, CE certified



DISCONTINUED

MODEL

MODEL	output voltage (Vdc)	output current max (A)	output power max (W)	ripple and noise[1] max (mVp-p)	efficiency[2] typ (%)
PDRB-18-5	5	3.0	15	50	75
PDRB-18-12	12	1.5	18	50	77
PDRB-18-15	15	1.2	18	50	77
PDRB-18-24	24	0.75	18	50	77

Notes: 1. At full load, nominal input, 20 MHz bandwidth oscilloscope.
2. At nominal input.
3. All specifications are measured at Ta=25°C, nominal input voltage, and rated output load unless otherwise specified.

PART NUMBER KEY

PDRB-18 - XX X

- PDRB-18 — Base Number
- XX — Output Voltage
- X — Terminal Type: "blank" = spring terminal; A = screw terminal

Please read our datasheet & drawing disclaimer here.

INPUT

parameter	conditions/description	min	typ	max	units
voltage		90 120		264 375	Vac Vdc
frequency		47		63	Hz
current	at 90 Vac, full load			500	mA
inrush current	at 115 Vac, full load at 230 Vac, full load			15 30	A A
leakage current	input to output input to FG			0.25 3.5	mA mA

OUTPUT

parameter	conditions/description	min	typ	max	units
capacitive load				7,000	µF
initial set point accuracy				±1	%
line regulation	at full load, V in min to V in max			±1	%
load regulation	at Vi nom, 0~100% load			±2	%
adjustability	via built in trim pot, 80% load 5, 12, 15 Vdc output models 24 Vdc output models	 90 90		 115 120	 % %
rated continuous loading at max trim voltage	5 Vdc output models (5.75 Vdc) 12 Vdc output models (13.8 Vdc) 15 Vdc output models (17.25 Vdc) 24 Vdc output models (28.8 Vdc)			2.6 1.3 1.0 0.6	A A A A
start-up time	at Vi nom, full load at Vi nom, full load with max capacitive load			1.0 1.5	s s
rise time	at Vi nom, full load at Vi nom, full load with max capacitive load			150 500	ms ms
hold-up time	at 115 Vac, full load at 230 Vac, full load	20 75			ms ms
fall time	at Vi nom, full load			150	ms
transient recovery time	at Vi nom, 100~50% load			2	ms
switching frequency	at Vi nom, full load		132		kHz
temperature coefficient				±0.03	%/°C
power back immunity	at Vi nom, full load, for 1 second 5 Vdc output models 12 Vdc output models 15 Vdc output models 24 Vdc output models	 7.5 18 22 35		 	 Vdc Vdc Vdc Vdc
DC ON indicator threshold at start-up (GREEN)	5 Vdc output models 12 Vdc output models 15 Vdc output models 24 Vdc output models	3.5 9.0 11.0 18		4.5 10.8 13.5 21.6	Vdc Vdc Vdc Vdc
DC LOW indicator threshold after start-up (RED)	5 Vdc output models 12 Vdc output models 15 Vdc output models 24 Vdc output models	3.5 9.0 11.0 18		4.5 10.8 13.5 21.6	Vdc Vdc Vdc Vdc

DISCONTINUED

PROTECTIONS

parameter	conditions/description	min	typ	max	units
over voltage protection	at Vi nom, 80% load, auto recovery 5 Vdc output models 12 Vdc output models 15 Vdc output models 24 Vdc output models	 6.25 15 18.75 30		 7.25 17.4 21.75 34.8	 Vdc Vdc Vdc Vdc
over current protection	hiccup, auto recovery (see curve)	110		165	%
short circuit protection	hiccup, auto recovery				

SAFETY & COMPLIANCE

parameter	conditions/description	min	typ	max	units
isolation voltage	input to output for 1 minute	3,000 4,242			Vac Vdc
	input to FG for 1 minute	1,500 2,121			Vac Vdc
	output to FG for 1 minute	500 710			Vac Vdc
isolation resistance	input to output at 500 Vdc	100			MΩ
safety approvals	UL 508, UL 1310, UL/EN 62368-1 ISA 12.12.01 (Class I, Div 2, Groups A~D)				
safety class	Class I				
EMI/EMC	EN 55032 Class B, EN 55024, ENV 50204, EN 61204-3, EN 61000-3-2, EN 61000-3-3, EN 61000-6-2, EN 61000-6-3, EN 61000-4-2, EN 61000-4-3, EN 61000-4-4, EN 61000-4-5, EN 61000-4-6, EN 61000-4-8, EN 61000-4-11				
pollution degree	2				
degree of protection	IP20				
MTBF	as per Bellcore Issue 6 at 40 °C, GB 5 Vdc output models 12 Vdc output models 15 Vdc output models 24 Vdc output models		 704,000 721,000 735,000 764,000		 hours hours hours hours
RoHS	yes				

Notes: 4. The power supply is considered a component which will be installed into final equipment. The final equipment still must be tested to meet the necessary EMC directives.

ENVIRONMENTAL

parameter	conditions/description	min	typ	max	units
operating temperature	see derating curves	-20		71	°C
storage temperature		-25		85	°C
humidity	non-condensing	20		95	%
altitude				5,000	m
vibration	meets IEC 60068-2-6 (Mounting on rail: 10~500 Hz, 2 G, along X,Y,Z axis, for 60 minutes on each axis)				
shock	meets IEC 60068-2-27 (15 G, 11 ms, 3 axis, 6 faces, 3 times for each face)				

DISCONTINUED

MECHANICAL

parameter	conditions/description	min	typ	max	units
dimensions	90.00 x 22.50 x 114.00 (3.60 x 0.89 x 4.49 inches)				mm
material	plastic				
weight			120		g
cooling	natural convection				
input/output connector	spring terminal: accepts 24~14 AWG wire screw terminal: accepts 26~12 AWG wire				

MECHANICAL DRAWING

units: mm [inch]
tolerance:
X≤30.00: ±0.30 [±0.01]
30.00<X≤120.00: ±0.50 [±0.02]
unless otherwise noted

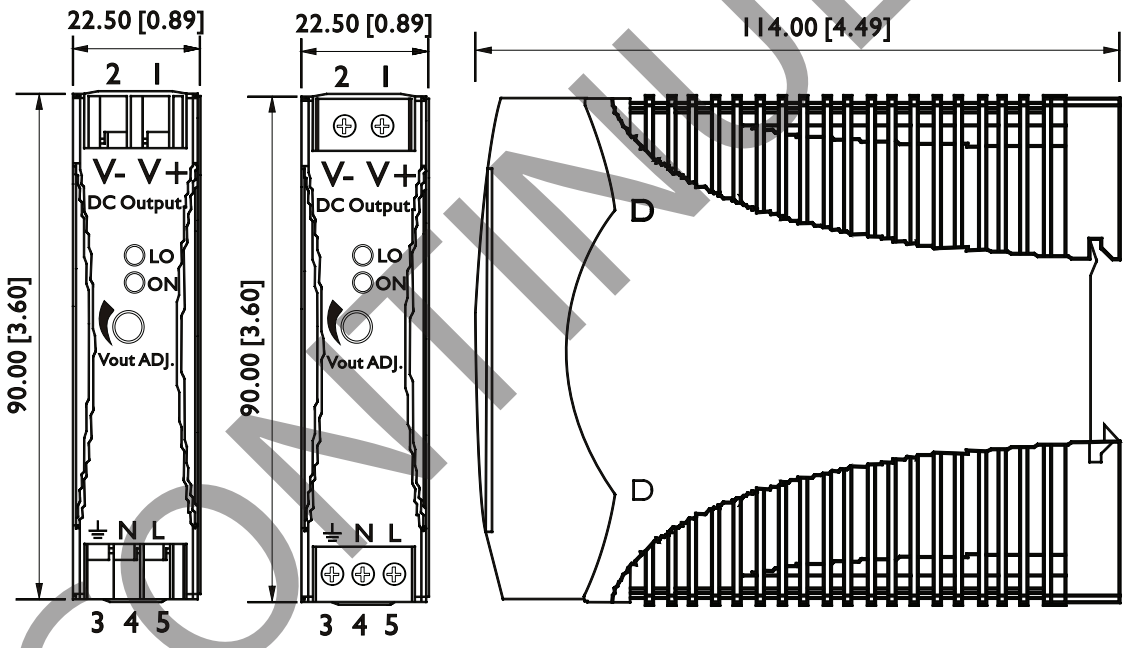

TERMINAL CONNECTIONS	
TERMINAL	Function
1	V+
2	V-
3	⏚
4	N
5	L

INSTALLATION		
	Spring	Screw
DIN RAIL	TS35/7.5 or TS35/15	
Cable	flexible/solid, copper conductors only, 60/75°C	
Wire Range	24~14 AWG (0.2~2 mm²)	26~12 AWG (0.2~2.5 mm²)
Strip Length	10 mm	4~5 mm
Screw Torque	--	5 lb·in
Position	Vertical	
Cooling	Natural convection, 25 mm clearance on all sides	

DISCONTINUED

DERATING CURVE

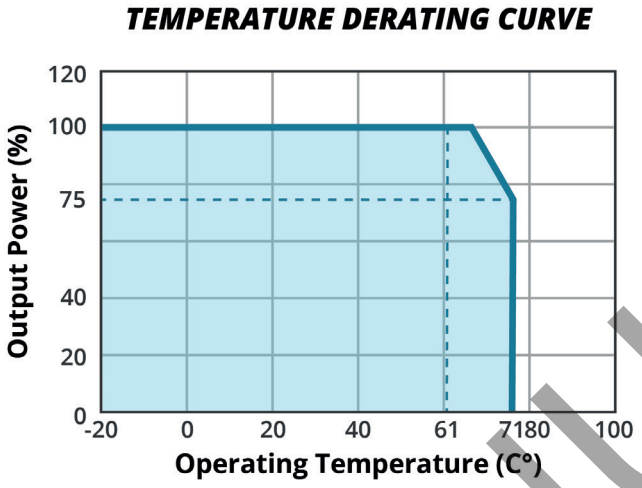

EFFICIENCY CURVES

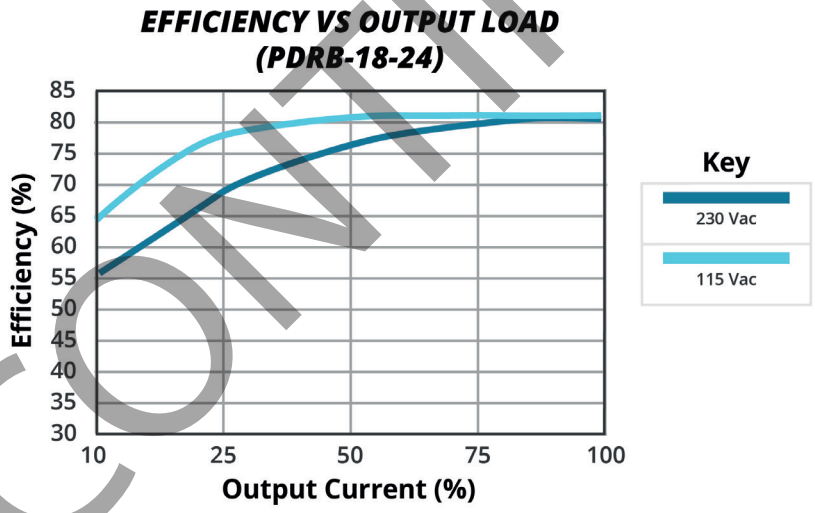

CURRENT LIMITED CURVE

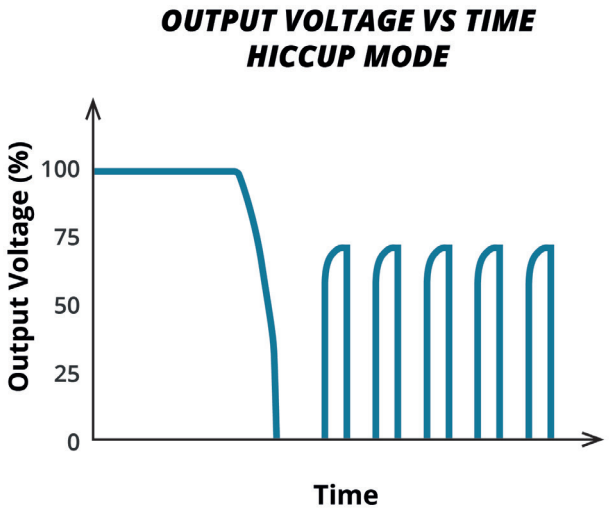

DISCONTINUED

REVISION HISTORY

rev.	description	date
1.0	initial release	06/13/2019
1.01	updated safety certifications	08/04/2020
1.02	derating and efficicency curves updated	02/28/2022

The revision history provided is for informational purposes only and is believed to be accurate.

DISCONTINUED

CUI INC
a bel group

Headquarters
20050 SW 112th Ave.
Tualatin, OR 97062
800.275.4899

Fax 503.612.2383
cui.com
techsupport@cui.com

CUI offers a two (2) year limited warranty. Complete warranty information is listed on our website.

CUI reserves the right to make changes to the product at any time without notice. Information provided by CUI is believed to be accurate and reliable. However, no responsibility is assumed by CUI for its use, nor for any infringements of patents or other rights of third parties which may result from its use.

CUI products are not authorized or warranted for use as critical components in equipment that requires an extremely high level of reliability. A critical component is any component of a life support device or system whose failure to perform can be reasonably expected to cause the failure of the life support device or system, or to affect its safety or effectiveness.