SERIES: PDQE10 | DESCRIPTION: DC-DC CONVERTER

FEATURES

- industry standard footprint
- board, chassis and Din rail versions available
- industrial operating temp -40~+85°C
- 1500 Vdc isolation voltage
- industry standard footprint compatible with CUI legacy PDQ10 series
- high efficiency up to 88%
- 4:1 input rating
- single & dual output models available
- output short circuit, over current & overvoltage protection
- EN/BS EN 62368-1

MODEL	input voltage		output voltage	output current		output power	ripple & noise[1]	efficiency[2]
	typ (Vdc)	range (Vdc)	(Vdc)	min (mA)	max (mA)	max (W)	max (mVp-p)	typ (%)
PDQE10-Q24-S3[4]	24	9~36	3.3	0	2400	7.92	80	79
PDQE10-Q24-S5[4]	24	9~36	5	0	2000	10	80	83
PDQE10-Q24-S9[4]	24	9~36	9	0	1111	10	80	86
PDQE10-Q24-S12[4]	24	9~36	12	0	833	10	80	87
PDQE10-Q24-S15[4]	24	9~36	15	0	667	10	80	87
PDQE10-Q24-S24[4]	24	9~36	24	0	416	10	80	88
PDQE10-Q24-D5[4]	24	9~36	±5	0	±1000	10	80	83
PDQE10-Q24-D9[4]	24	9~36	±9	0	±555	10	80	86
PDQE10-Q24-D12[4]	24	9~36	±12	0	±416	10	80	87
PDQE10-Q24-D15[4]	24	9~36	±15	0	±333	10	80	87
PDQE10-Q24-D24[4]	24	9~36	±24	0	±208	10	80	87
PDQE10-Q48-S3	48	18~75	3.3	0	2400	7.92	80	79
PDQE10-Q48-S5	48	18~75	5	0	2000	10	80	83
PDQE10-Q48-S12	48	18~75	12	0	833	10	80	87
PDQE10-Q48-S15	48	18~75	15	0	667	10	80	87
PDQE10-Q48-S24	48	18~75	24	0	416	10	80	88
PDQE10-Q48-D5	48	18~75	±5	0	±1000	10	80	83
PDQE10-Q48-D12	48	18~75	±12	0	±416	10	80	87
PDQE10-Q48-D15	48	18~75	±15	0	±333	10	80	87
PDQE10-Q48-D24	48	18~75	±24	0	±208	10	80	87

Notes:
1. From 5~100% load, nominal input, 20 MHz bandwidth oscilloscope, with 10 μF tantalum and 1 μF ceramic capacitors on the output. From 0~5% load, ripple and noise is <5% Vo.
2. Measured at nominal input voltage, full load. The typical efficiencies for the chassis mount and DIN-rail mount versions are ~2% less than the DIP versions due to the input reverse polarity protection.
3. All specifications are measured at Ta=25°C, humidity < 75%, nominal input voltage, and rated output load unless otherwise specified.
4. Model is not CE certified.
5. All U-frame models of this series are not UL certified.
6. Only PDQE10-Q24-DXX parts are UL certified for chassis mount and DIN-rail versions.

Please read our datasheet & drawing disclaimer here.

PART NUMBER KEY

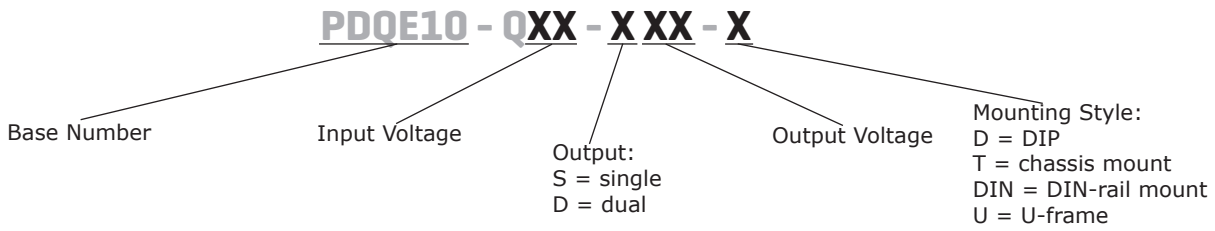

INPUT

parameter	conditions/description		min	typ	max	units
operating input voltage[7]	24 Vdc input models 48 Vdc input models		9 18	24 48	36 75	Vdc Vdc
start-up voltage[7]	24 Vdc input models 48 Vdc input models				9 18	Vdc Vdc
surge voltage	for maximum of 1 second 24 Vdc input models 48 Vdc input models		 -0.7 -0.7		 50 100	 Vdc Vdc
under voltage shutdown	24 Vdc input models 48 Vdc input models		5.5 12	6.5 15.5		Vdc Vdc
current (full load/no load)	24 Vdc input models	3.3 Vdc output models all other models		423/5 502/5	434/12 514/12	mA mA
	48 Vdc input models	3.3 Vdc output models all other models		190/4 251/4	215/8 258/8	mA mA
remote on/off (CTRL)[8]	module ON (3.5~12 Vdc or CTRL pin open circuit or pulled high) module OFF (0~1.2 Vdc CTRL pin pulled low to GND) converter input current when CTRL pin pulled low CTRL pin input current when CTRL pin pulled low			 6 1.5	 10	 mA mA
	start-up time			2		s
filter	Pi filter					
input reverse polarity protection	only present on chassis mount and DIN-rail mount models					
no load power consumption				0.12		W

Notes: 7. The minimum input voltage and start-up voltage for the chassis mount and DIN-rail mount versions are 1 Vdc higher than the DIP versions.
8. The voltage of the Ctrl pin is referenced to input GND pin.

OUTPUT

parameter	conditions/description	min	typ	max	units
maximum capacitive load[9]	3.3, 5 Vdc output models ±5 Vdc output models 9, ±9 Vdc output models ±12 Vdc output models ±15 Vdc output models all other models			2,200 1,000 680 470 330 100	µF µF µF µF µF µF
voltage accuracy[10]	0% to full load		±1	±3	%
line regulation	from low line to high line, full load positive outputs negative outputs		 ±0.2 ±0.5	 ±0.5 ±1	 % %
load regulation[11]	from 5% to full load positive outputs negative outputs		 ±0.5 ±0.5	 ±1 ±1.5	 % %
voltage balance[12]	dual output models			±5	%

Note: 9. Tested at input voltage range and full load.
10. At 0~5% load, the max output voltage accuracy for the ±5 & ±9 Vdc output models is ±5%.
11. At 0~100% load, the max load regulation is ±5%.
12. Unbalanced loads should not exceed ±5%. If ±5% is exceeded, the product performance cannot be guaranteed.

OUTPUT (CONTINUED)

parameter	conditions/description		min	typ	max	units
cross regulation	dual output models: main output 50% load secondary output from 10~100% load				±5	%
switching frequency[13]	PWM mode			350		kHz
transient recovery time	25% load step change, nominal input voltage			300	500	µs
transient response deviation	PDQE10-Q48-S3	25% load step change, nominal input voltage		±5	±8	%
	all other models	25% load step change, nominal input voltage		±3	±5	%
temperature coefficient	at full load				±0.03	%/°C

Note: 13. Value is based on full load. At loads <10%, the switching frequency decreases with decreasing load

PROTECTIONS

parameter	conditions/description	min	typ	max	units
over voltage protection		110		160	%
over current protection		110	140	190	%
short circuit protection	continuous, self recovery				

SAFETY AND COMPLIANCE

parameter	conditions/description	min	typ	max	units
isolation voltage	input to output for 1 minute at 1 mA	1,500			Vdc
isolation resistance	input to output at 500 Vdc	1,000			MΩ
isolation capacitance	input to output, 100 kHz / 0.1 V		1,000		pF
safety approvals	certified to 60950-1: UL[14,15] certified to 62368: EN/BS EN				
conducted emissions	CISPR22/EN55022, class A (no external circuit); class B (external circuit required, see Figure 3-2)				
radiated emissions	CISPR22/EN55022, class A (no external circuit); class B (external circuit required, see Figure 3-2)				
ESD	IEC/EN61000-4-2, contact ± 4kV, class B				
radiated immunity	IEC/EN61000-4-3, 10V/m, class A				
EFT/burst	IEC/EN61000-4-4, ± 2kV, class B (external circuit required, see Figure 3-1)				
surge	IEC/EN61000-4-5, line-line ± 2kV, class B (external circuit required, see Figure 3-1)				
conducted immunity	IEC/EN61000-4-6, 3 Vr.m.s, class A				
voltage dips & interruptions	IEC/EN61000-4-29, 0%-70%, class B				
MTBF	as per MIL-HDBK-217F, 25°C	1,000,000			hours
RoHS	yes				

Note: 14. All U-frame models of this series are not UL certified.
15. Only PDQE10-Q24-DXX parts are UL certified for chassis mount and DIN-rail versions.

ENVIRONMENTAL

parameter	conditions/description	min	typ	max	units
operating temperature	see derating curves	-40		85	°C
storage temperature		-55		125	°C
storage humidity	non-condensing	5		95	%
vibration	10~55 Hz for 30 minutes on each axis		10		G

DERATING CURVES

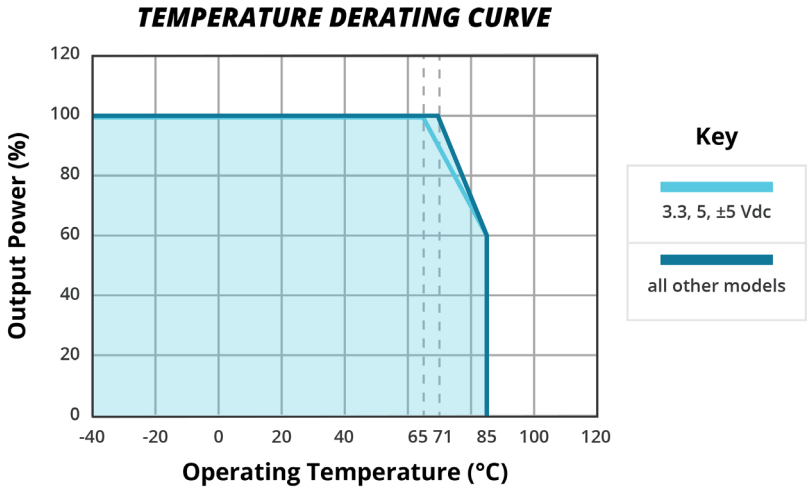

SOLDERABILITY[15]

parameter	conditions/description	min	typ	max	units
hand soldering	1.5 mm from case for 10 seconds			300	°C
wave soldering	see wave soldering profile			260	°C

Note: 15. For DIP models only.

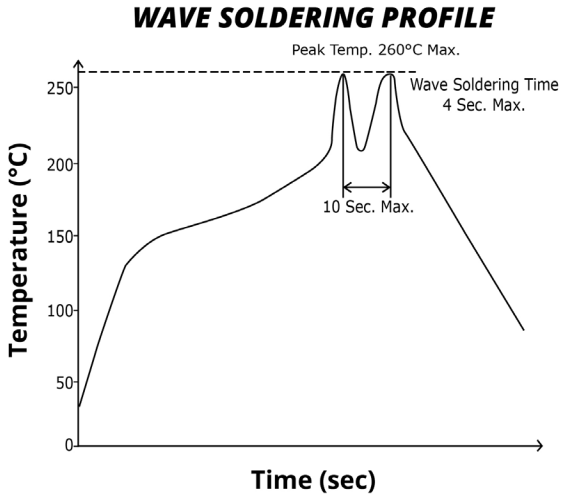

MECHANICAL

parameter		conditions/description	min	typ	max	units
dimensions	DIP	25.40 x 25.40 x 11.70 [1.000 x 1.000 x 0.461 inch]				mm
	Chassis	76.00 x 31.50 x 21.20 [2.992 x 1.240 x 0.834 inch]				mm
	DIN-Rail	76.00 x 31.50 x 25.80 [2.992 x 1.240 x 1.016 inch]				mm
	U-frame	55.00 x 52.30 x 19.00 [2.165 x 2.059 x 0.748 inch]				mm
case material		aluminum alloy				
weight		DIP		15		g
		Chassis mount		35		g
		DIN-rail mount		55		g
		U-frame		44		g

MECHANICAL DRAWING (DIP)

units: mm [inch]
tolerance: ±0.50[±0.020]
pin diameter tolerance: ±0.10[±0.004]

PIN CONNECTIONS		
PIN	Function	
	Single	Dual
1	GND	GND
2	Vin	Vin
3	+Vout	+Vout
4	No Pin	0V
5	0V	-Vout
6	CTRL	CTRL

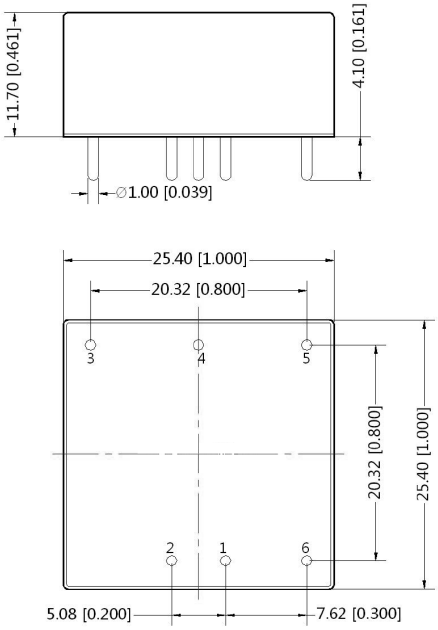

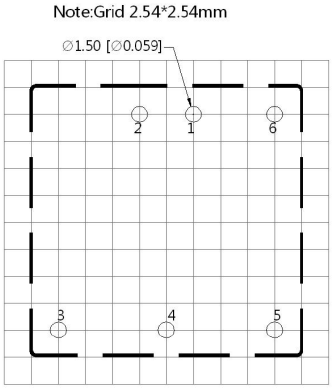

Recommended PCB Layout
Top View

MECHANICAL DRAWING (CHASSIS)

units: mm [inch]
tolerance: ±0.50[±0.020]

wire range: 24~12 AWG
tightening torque: max 0.4 N·m

PIN CONNECTIONS		
PIN	Function	
	Single	Dual
1	CTRL	CTRL
2	GND	GND
3	Vin	Vin
4	0V	-Vout
5	NC	0V
6	+Vout	+Vout

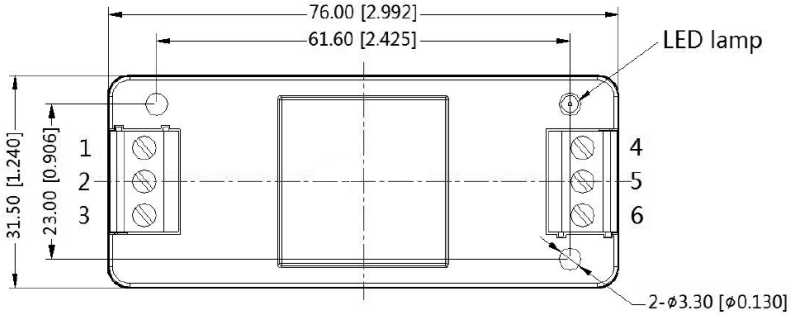

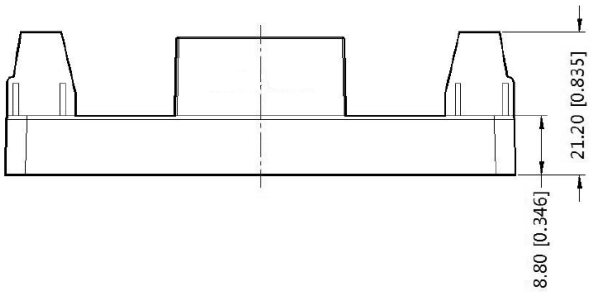

MECHANICAL DRAWING (DIN-RAIL)

units: mm [inch]
tolerance: ±0.50[±0.020]

installed on DIN rail TS35
wire range: 24~12 AWG
tightening torque: max 0.4 N·m

PIN CONNECTIONS		
PIN	Function	
	Single	Dual
1	CTRL	CTRL
2	GND	GND
3	Vin	Vin
4	0V	-Vout
5	NC	0V
6	+Vout	+Vout

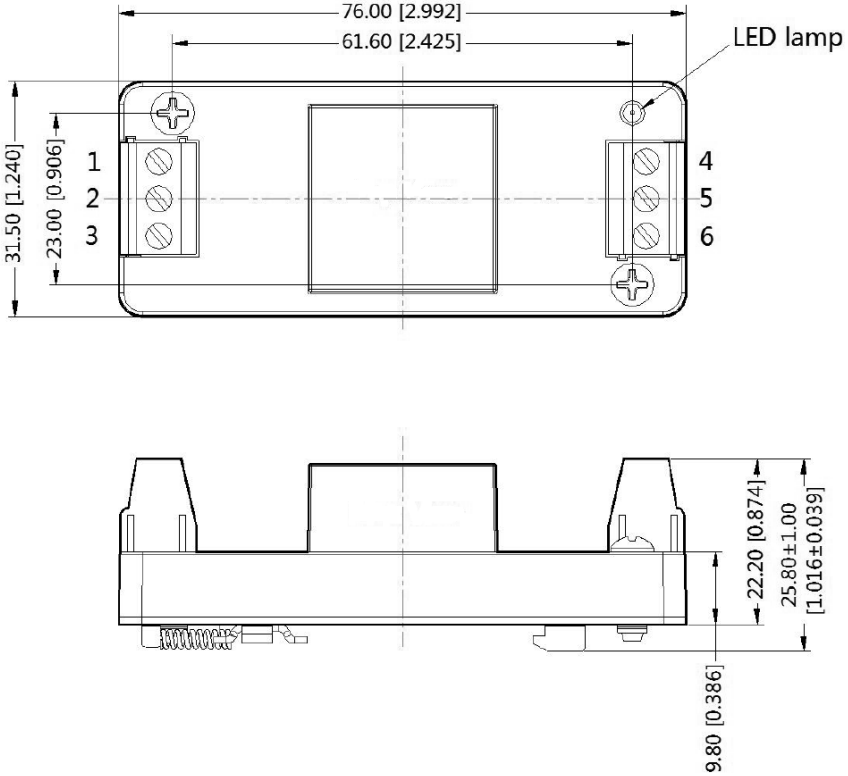

MECHANICAL DRAWING (U-FRAME)

units: mm [inch]
wire range: 24-12 AWG
tolerance: ±1.00[±0.039]
tightening torque: Max 0.4 N·m

PIN CONNECTIONS		
PIN	Function	
	Single	Dual
1	GND	GND
2	Vin	Vin
3	Ctrl	Ctrl
4	Case	Case
5	NC	NC
6	+Vo	+Vo
7	NC	0V
8	0V	-Vo

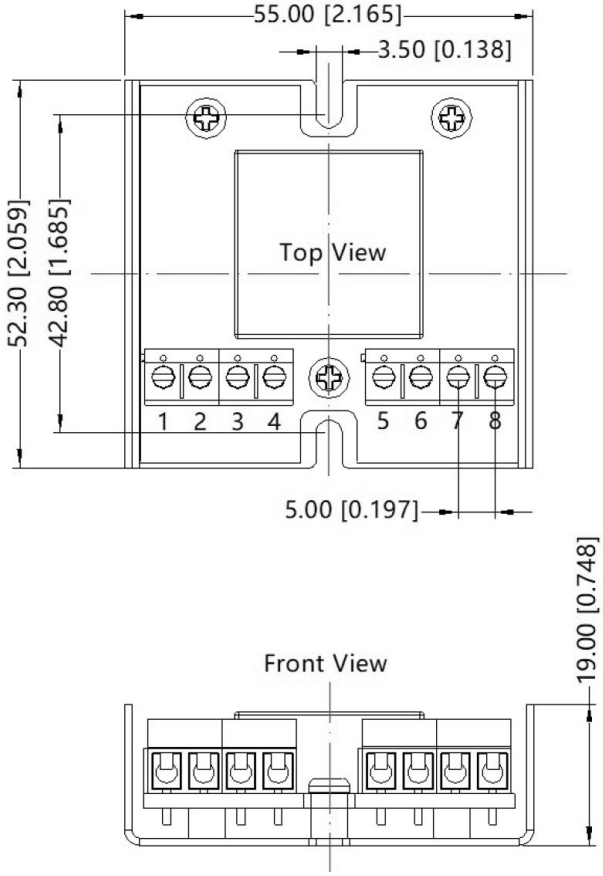

APPLICATION CIRCUIT (DIP, CHASSIS, DIN-RAIL)

This series has been tested according to the following recommended circuits (Figures 1 & 2) before leaving the factory. If you want to further reduce the input and output ripple, you can increase the input and output capacitors or select capacitors of low equivalent impedance provided that the capacitance is less than the maximum capacitive load of the model.

Figure 1
Single Output Models

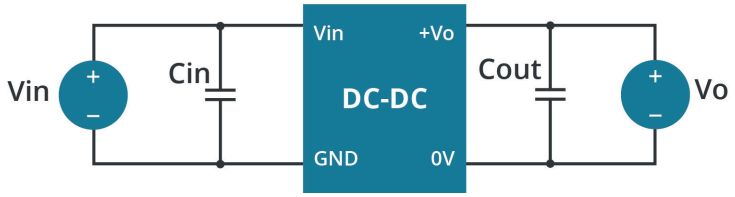

Figure 2
Dual Output Models

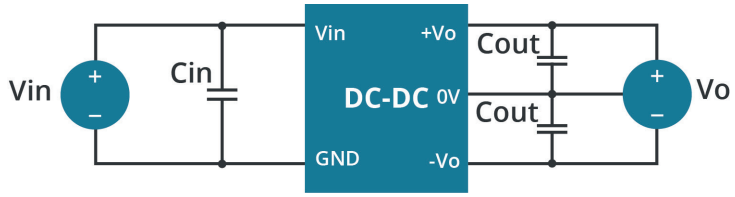

Table 1

Vin (Vdc)	Cin (μF)	Cout (μF)
24	100	10
48	10~47	10

APPLICATION CIRCUIT (U-FRAME)

Figure 1
Single Output Models

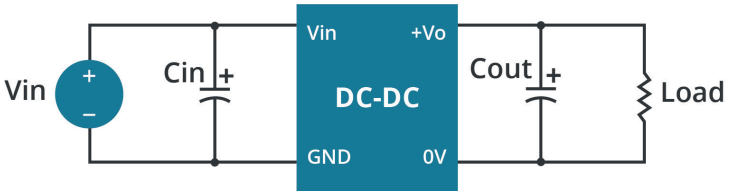

Figure 2
Dual Output Models

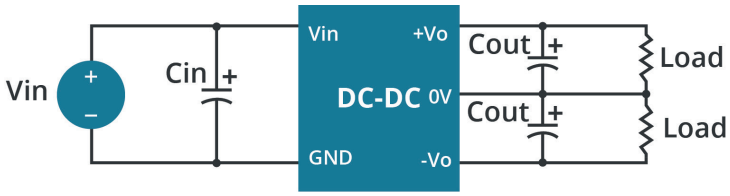

Table 1

Vin (Vdc)	Cin (μF/V)	Vout (Vdc)	Cout (μF/V)
24	100/50	±5/±9/3.3/5/9	10/16
		±12/±15/12/15	10/25
		±24/24	10/50
48	10~47/100	±5/3.3/5	10/16
		±12/±15/12/15	10/25
		±24/24	10/50

EMC RECOMMENDED CIRCUIT (DIP, CHASSIS, DIN-RAIL)

Figure 3

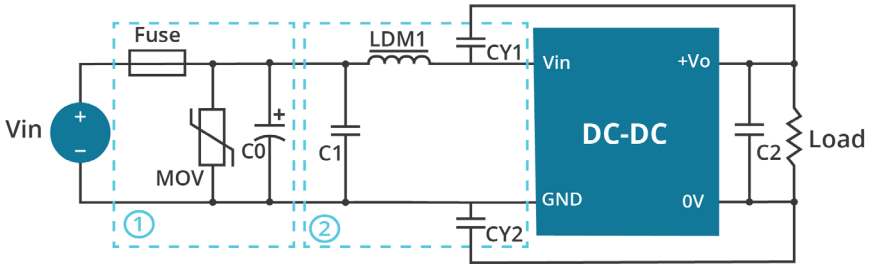

Table 2

Recommended External Circuit Components		
Vin (Vdc)	24	48
FUSE	choose according to actual input current	
MOV	S20K30	S14K60
C0	330 µF / 50 V	330 µF / 100 V
C1	1 µF / 50 V	1 µF / 100 V
C2	10 µF	
LDM1	4.7 µH	
CY1, CY2	1 nF / 2 kV	

EMC RECOMMENDED CIRCUIT (U-FRAME)

Figure 3

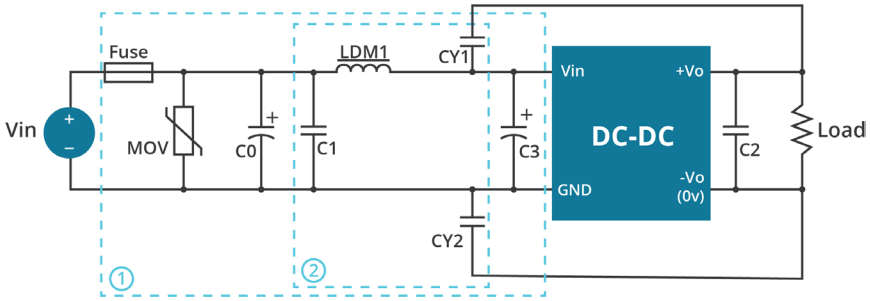

Table 2

Recommended External Circuit Components		
Vin (Vdc)	24	48
FUSE	choose according to actual input current	
MOV	S20K30	S14K60
C0/C3	330µF / 50V	330µF / 100V
C1	1µF / 50V	1µF / 100V
C2	refer to the Cout in Figure 1 & 2	
LDM1	4.7µH	
CY1, CY2	1nF / 2kV	

REVISION HISTORY

rev.	description	date
1.0	initial release	06/21/2018
1.01	features and safety line updated, packaging removed	01/19/2021
1.02	remote start-up time updated	03/15/2021
1.03	derating curve and circuit figure updated	07/27/2021
1.04	CE removed from 24V models, U-frame option added	11/07/2022
1.05	ctrl pin information updated	11/11/2022
1.06	transient response deviation updated for PDQE10-Q48-S3	09/07/2023
1.07	updated notes 3 & 13	01/10/2024
1.08	updated notes 5, 6, 14 & 15, UKCA mark added	04/05/2024

The revision history provided is for informational purposes only and is believed to be accurate.

CUI INC
a bel group

Headquarters
20050 SW 112th Ave.
Tualatin, OR 97062
800.275.4899

Fax 503.612.2383
cui.com
techsupport@cui.com

CUI offers a two (2) year limited warranty. Complete warranty information is listed on our website.

CUI reserves the right to make changes to the product at any time without notice. Information provided by CUI is believed to be accurate and reliable. However, no responsibility is assumed by CUI for its use, nor for any infringements of patents or other rights of third parties which may result from its use.

CUI products are not authorized or warranted for use as critical components in equipment that requires an extremely high level of reliability. A critical component is any component of a life support device or system whose failure to perform can be reasonably expected to cause the failure of the life support device or system, or to affect its safety or effectiveness.