SERIES: EMMA 15W | **DESCRIPTION:** MEDICAL AC-DC POWER SUPPLY

FEATURES

- up to 15 W power
- interchangeable AC blades
- universal input (90~264 Vac)
- single regulated output from 5~24 Vdc
- over voltage and short circuit protections
- UL/cUL, CE safety approvals
- medical 60601-1 4th edition safety approvals
- designed for 2 x MOPP applications
- level V efficiency



DISCONTINUED

MODEL	output voltage (Vdc)	output current max (A)	output power max (W)	ripple and noise[1] max (mVp-p)	efficiency level
EMMA050200	5	2	10	50	V
EMMA120110	12	1.1	13.2	120	V
EMMA150100	15	1.0	15	150	V
EMMA240063	24	0.625	15	240	V

1. at full load, 100 ~ 240 Vac input, 20 MHz bandwidth oscilloscope, each output terminated with a 10 µF aluminum electrolytic and 0.1 µF ceramic capacitors.

PART NUMBER KEY

EMMA120110 X - XX - IC - CXX

- Base Number (example of 12 Vdc, 1.1 A)
- DC Plug Type: See output plug options on page 3 for more details
- Factory Designation
- Reserved for Custom Configurations
- Blades:
  - "blank" = North American, European, United Kingdom, Australian
  - N = North American blade included
  - E = European blade included
  - B = United Kingdom blade included
  - A = Australian blade included
  - K = No blades included

Please read our datasheet & drawing disclaimer here.

INPUT

parameter	conditions/description	min	typ	max	units
voltage		90		264	Vac
frequency		47		63	Hz
inrush current	at 240 V ac			50	A
no load power consumption				0.3	W

OUTPUT

parameter	conditions/description	min	typ	max	units
line regulation[1]			±1		%
load regulation[2]	5 Vdc output all other outputs		±4 ±2		% %
voltage accuracy	5 Vdc output all other outputs		±3 ±2		% %
hold-up time	at 115 Vac		10		ms
switching frequency			95		kHz
temperature coefficient			±0.05		%/°C

Note: 1. measured from 100 ~ 240 Vac, full load
2. measured from 60% to full load and from 60 ~ 20% load (60% ±40% load)

PROTECTIONS

parameter	conditions/description
over voltage protection	TVS component to clamp
short circuit protection	continuous, auto restart

SAFETY & COMPLIANCE

parameter	conditions/description	min	typ	max	units
isolation voltage	input to output			5,656	Vdc
safety approvals	medical IEC 60601-1, EN 60601-1, UL 60601-1 4th edition				
EMI/EMC	EN5 5011 Class B, FCC Part 15 Class B, EN 60601-1-2, EN 61000-3-(2,3)				
leakage current				0.1	mA
MTBF	as per MIL-HDBK-217F, 115 Vac, 25 °C	200,000			hours
RoHS	2011/65/EU				

ENVIRONMENTAL

parameter	conditions/description	min	typ	max	units
operating temperature		0		50	°C
storage temperature		-20		85	°C
humidity	non-condensing			93	%

DISCONTINUED

MECHANICAL

parameter	conditions/description	min	typ	max	units
dimensions	80.60 x 47.90 x 43.30 (3.173 x 1.886 x 1.705 inch)				mm
input plug	interchangeable blades (US, Europe, UK, Australia)				
weight			130		g

MECHANICAL DRAWING

units: mm [inches]
tolerance: ±0.5[0.02]

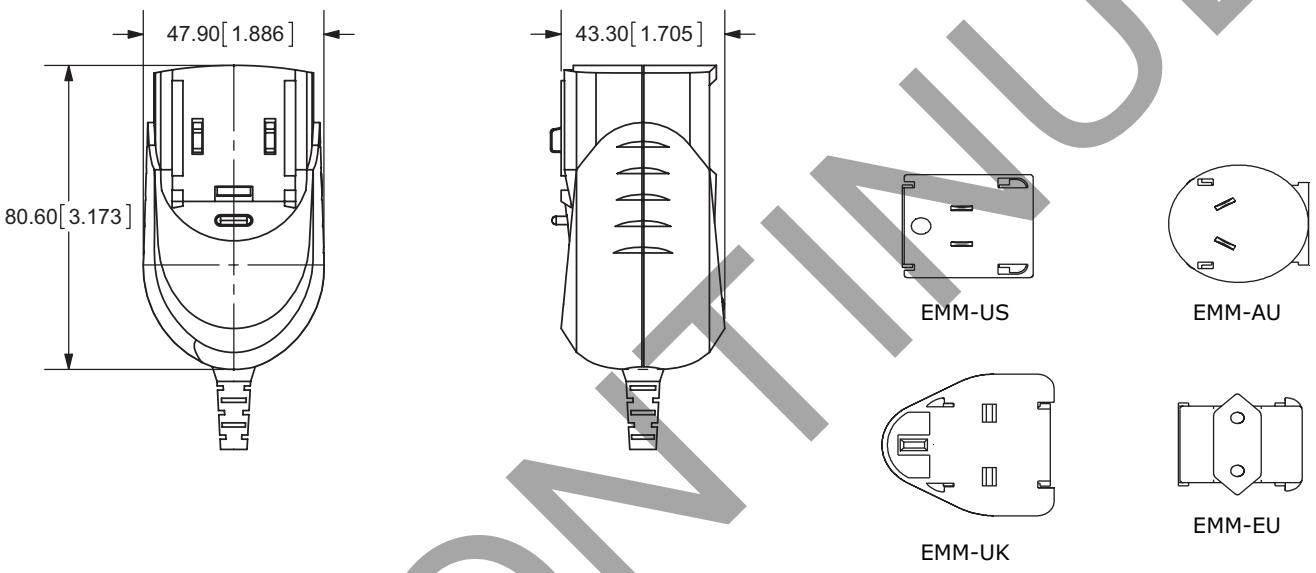

DC OUTPUT PLUG OPTIONS / DC CORD

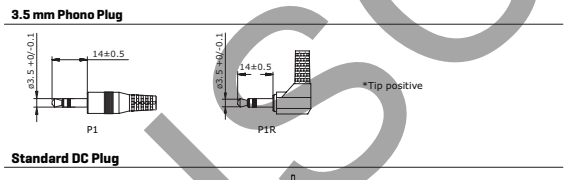

	A	B	C	Unit
P5/P5R	5.5	2.1	9.5	mm
P6/P6R	5.5	2.5	9.5	mm

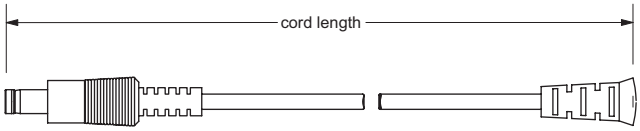

MODEL NO.	CABLE GAUGE	CORD LENGTH
EMMA050200	18 AWG	1,800 mm ±50
EMMA120110	18 AWG	1,800 mm ±50
EMMA150100	18 AWG	1,800 mm ±50
EMMA240063	18 AWG	1,800 mm ±50

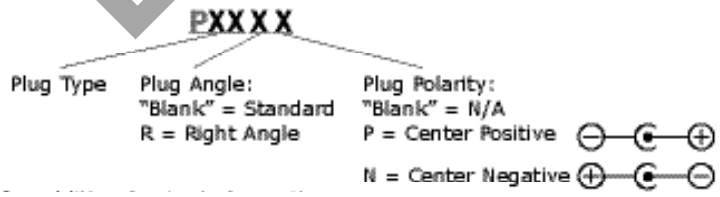

DISCONTINUED

REVISION HISTORY

rev.	description	date
1.0	initial release	12/16/2011
1.01	updated P7/P7R B dimension	03/23/2012
1.02	V-Infinity branding removed	08/21/2012
1.03	updated safety approvals	04/29/2013
1.04	updated datasheet	07/17/2015
1.05	updated to medical 60601-1 4th edition	06/20/2017
1.06	company logo updated	09/30/2020

The revision history provided is for informational purposes only and is believed to be accurate.

DISCONTINUED

CUI INC
a bel group

Headquarters
20050 SW 112th Ave.
Tualatin, OR 97062
800.275.4899

Fax 503.612.2383
cui.com
techsupport@cui.com

This device complies with part 15 of the FCC Rules. Operation is subject to the following two conditions:
(1) This device may not cause harmful interference, and
(2) this device must accept any interference received, including interference that may cause undesired operation.

CUI offers a one (1) year limited warranty. Complete warranty information is listed on our website.

CUI reserves the right to make changes to the product at any time without notice. Information provided by CUI is believed to be accurate and reliable. However, no responsibility is assumed by CUI for its use, nor for any infringements of patents or other rights of third parties which may result from its use.

CUI products are not authorized or warranted for use as critical components in equipment that requires an extremely high level of reliability. A critical component is any component of a life support device or system whose failure to perform can be reasonably expected to cause the failure of the life support device or system, or to affect its safety or effectiveness.