SERIES: DQD20-U | DESCRIPTION: DC-DC CONVERTER

FEATURES

- up to 20 W isolated output
- single and dual regulated outputs
- over voltage, input under voltage, short circuit, and over current protections
- remote on/off control
- 1,600 Vdc isolation
- -40 ~ 105°C temperature range, with derating
- efficiency up to 91%
- certified to IEC/EN 62368-1

MODEL	input voltage		output voltage	output current	output power	ripple & noise[1]	efficiency[2]
	typ (Vdc)	range (Vdc)	typ (Vdc)	max (mA)	max (W)	max (mVp-p)	typ (%)
DQD20-24-S3-U	24	9~36	3.3	5,000	16.5	120	88
DQD20-24-S5-U	24	9~36	5	4,000	20	120	89
DQD20-24-S6-U	24	9~36	6	3,333	20	120	90
DQD20-24-S9-U	24	9~36	9	2,222	20	120	88
DQD20-24-S12-U	24	9~36	12	1,667	20	120	90
DQD20-24-S15-U	24	9~36	15	1,333	20	120	91
DQD20-24-S18-U	24	9~36	18	1,111	20	120	88
DQD20-24-S24-U	24	9~36	24	833	20	120	91
DQD20-24-D3-U	24	9~36	±3.3	±2,500	20	200	83
DQD20-24-D5-U	24	9~36	±5	±2,000	20	200	86
DQD20-24-D6-U	24	9~36	±6	±1,667	20	200	85
DQD20-24-D9-U	24	9~36	±9	±1,111	20	200	88
DQD20-24-D12-U	24	9~36	±12	±833	20	200	89
DQD20-24-D15-U	24	9~36	±15	±667	20	200	90
DQD20-24-D18-U	24	9~36	±18	±556	20	200	88
DQD20-24-D24-U	24	9~36	±24	±417	20	200	89
DQD20-48-S3-U	48	9~36	3.3	5,000	16.5	120	89
DQD20-48-S5-U	48	18~75	5	4,000	20	120	90
DQD20-48-S6-U	48	18~75	6	3,333	20	120	90
DQD20-48-S9-U	48	18~75	9	2,222	20	120	88
DQD20-48-S12-U	48	18~75	12	1,667	20	120	90
DQD20-48-S15-U	48	18~75	15	1,333	20	120	91
DQD20-48-S18-U	48	18~75	18	1,111	20	120	88
DQD20-48-S24-U	48	18~75	24	833	20	120	91
DQD20-48-D3-U	48	18~75	±3.3	±2,500	20	200	81
DQD20-48-D5-U	48	18~75	±5	±2,000	20	200	85
DQD20-48-D6-U	48	18~75	±6	±1,667	20	200	84

Please read our datasheet & drawing disclaimer here.

MODEL (CONTINUED)

	input voltage		output voltage	output current	output power	ripple & noise[1]	efficiency[2]
	typ (Vdc)	range (Vdc)	typ (Vdc)	max (mA)	max (W)	max (mVp-p)	typ (%)
DQD20-48-D9-U	48	18~75	±9	±1,111	20	200	88
DQD20-48-D12-U	48	18~75	±12	±833	20	200	89
DQD20-48-D15-U	48	18~75	±15	±667	20	200	88
DQD20-48-D18-U	48	18~75	±18	±556	20	200	88
DQD20-48-D24-U	48	18~75	±24	±417	20	200	89

Notes:
1. The ripple & noise is measured at 20 MHz bandwidth, full load, parallel cable method
   It is recommended to use at a load of over 5%. If the load is below 5%, the ripple index of the product may exceed the specifications, but itdoes not affect the reliability of the product.
2. The efficiency is measured at nominal input voltage and rated output load.
3. Unless otherwise specified, all values or indicators in this manual are tested at Ta=25°C, humidity<75%RH, rated input voltage and rated load (pure resistance load).
4. Ensure the input voltage remains within the specified range to prevent permanent and irreparable damage to the product.
5. Operate with a load above 5%. Loads below 5% may result in ripple levels exceeding specifications, though this does not compromise product reliability.
6. Maintain dual output module load imbalance within ±5%. Imbalances beyond this threshold may result in performance deviations from the specifications outlined in this manual.

PART NUMBER KEY

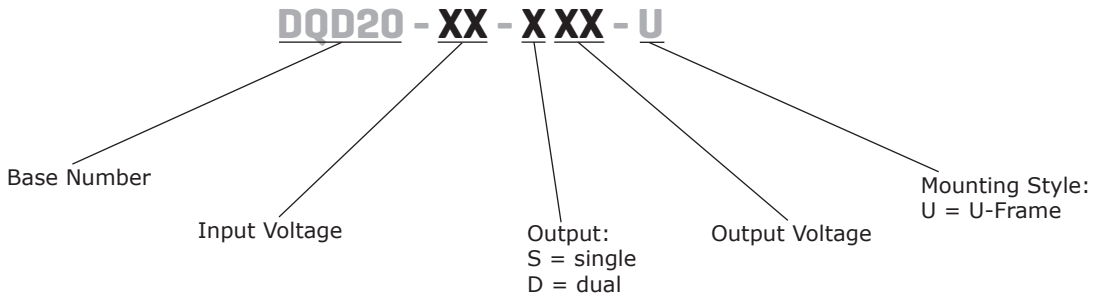

INPUT

parameter	conditions/description			min	typ	max	units
input voltage range	24 Vdc input models			9	24	40	Vdc
	48 Vdc input models			18	48	80	Vdc
input current (full load/no load)	single output	24 Vdc input models	3.3 V output		781/30	800/50	mA
			5, 6 V output		936/35	958/55	mA
			all other outputs		947/6	969/15	mA
		48 Vdc input models	3.3 V output		386/15	395/30	mA
			5, 6 V output		463/20	473/30	mA
			all other outputs		473/3	484/15	mA
	dual output	24 Vdc input models	3.3 V output		828/8	-/18	mA
			5, 6 V output		981/10	-/20	mA
			all other outputs		947/20	-/30	mA
		48 Vdc input models	3.3 V output		424/6	-/16	mA
			5, 6 V output		496/8	-/18	mA
			all other outputs		473/15	-/25	mA
reflected ripple current	at rated input voltage				30		mA
surge voltage	1 second max						
	24 Vdc input models			-0.7		50	Vdc
	48 Vdc input models			-0.7		100	Vdc
turn-on voltage threshold	at full load						
	24 Vdc input models					9	Vdc
	48 Vdc input models					18	Vdc
turn-off voltage threshold	at full load						
	24 Vdc input models			5.5	6.5		Vdc
	48 Vdc input models			12	15.5		Vdc

INPUT (CONTINUED)

parameter	conditions/description		typ	max	units
filter	Pi filter				
remote on/off	module on module off	CTRL pin open or pulled high (TTL 2.7 ~ 12 Vdc) CTRL pin pulled low (0 ~ 1.2 Vdc)			
	cut off input current			2	7	mA

OUTPUT

parameter	conditions/description		min	typ	max	units
maximum capacitive load	3.3, 5 Vdc output models				10,000	µF
	6 Vdc output models				8,200	µF
	9 Vdc output models				6,800	µF
	±3.3, ±5 Vdc output models				2,000	µF
	12 Vdc output models				1,600	µF
	±6 Vdc output models				1,500	µF
	±9, 15 Vdc output models				1,000	µF
	18 Vdc output models				820	µF
	±12 Vdc output models				800	µF
	±15 Vdc output models				600	µF
	24 Vdc output models				500	µF
	±18 Vdc output models				470	µF
	±24 Vdc output models				300	µF
voltage accuracy	0% ~ 100% load	positive output		±1	±3	%
		negative output		±1	±5	%
line regulation	full voltage range, full load	positive output		±0.2	±0.5	%
		negative output		±0.4	±1.0	%
load regulation	5% ~ 100% load			±0.5	±1.0	%
	0% ~ 5% load	single output		±1.0	±3.0	%
		dual output		±3.0	±5.0	%
transient response deviation	25% rated load step change			±5	±8	%
transient response recovery	25% rated load step change			300	500	µs
start-up time	at rated input voltage and constant resistance load			10		ms
trim[7]			90		110	%
temperature coefficient	at full load				±0.03	%/°C
switching frequency	PWM mode			300		kHz

Notes: 7. Single output models only.

PROTECTIONS

parameter	conditions/description	min	typ	max	units
over current protection		110	140		%
over voltage protection		110		160	%
short circuit protection	continuous, auto recovery				

SAFETY AND COMPLIANCE

parameter	conditions/description	min	typ	max	units
isolation voltage	input to output for 1 minute, 1 mA max	1,600			Vdc
isolation capacitance	input to output, (100 kHz, 0.1V)		2,000		pF
safety approvals	certified to 62368-1: IEC, EN				
conducted emissions	CISPR32/EN55032 CLASS B (see recommended circuits)				
radiated emissions	CISPR32/EN55032 CLASS B (see recommended circuits)				
ESD	IEC/EN61000-4-2 Contact ±6 kV (single) ±4 kV (dual), Air ±8 kV, perf. Criteria B				
radiated immunity	IEC/EN61000-4-3 10 V/m, perf. Criteria A				
EFT/burst	IEC/EN61000-4-4 ±2 kV (see recommended circuits), perf. Criteria A (single) /B (dual)				

SAFETY AND COMPLIANCE (CONTINUED)

parameter	conditions/description	min	typ	max	units
surge	IEC/EN61000-4-5 line to line ±2 kV (see recommended circuits) perf. Criteria B				
conducted immunity	IEC/EN61000-4-6 3 Vrms , perf. Criteria A				
MTBF	as per MIL-HDBK-217F at 25 °C	1,000,000			hours
RoHS	yes				

ENVIRONMENTAL

parameter	conditions/description	min	typ	max	units
operating temperature		-40		105	°C
storage temperature		-55		125	°C
operating humidity	non condensing	5		95	%

MECHANICAL

parameter	conditions/description	min	typ	max	units
dimensions	55.0 x 52.30 x 19.0 [2.165 x 2.059 x 0.748 inch]				mm
case material	aluminum alloy				
weight			48.5		g
cooling	natural convection				

MECHANICAL DRAWING

units: mm [inch]
general tolerance: ±1.00 [±0.039]
wire range: 24~12 AWG
tightening torque: Max 0.4 N•m

PIN CONNECTIONS		
PIN	Single	Dual
1	-Vin	-Vin
2	+Vin	+Vin
3	CTRL	CTRL
4	CASE	CASE
5	NC	NC
6	+Vo	+Vo
7	Trim	COM
8	GND	GND

Note: NC = no connection

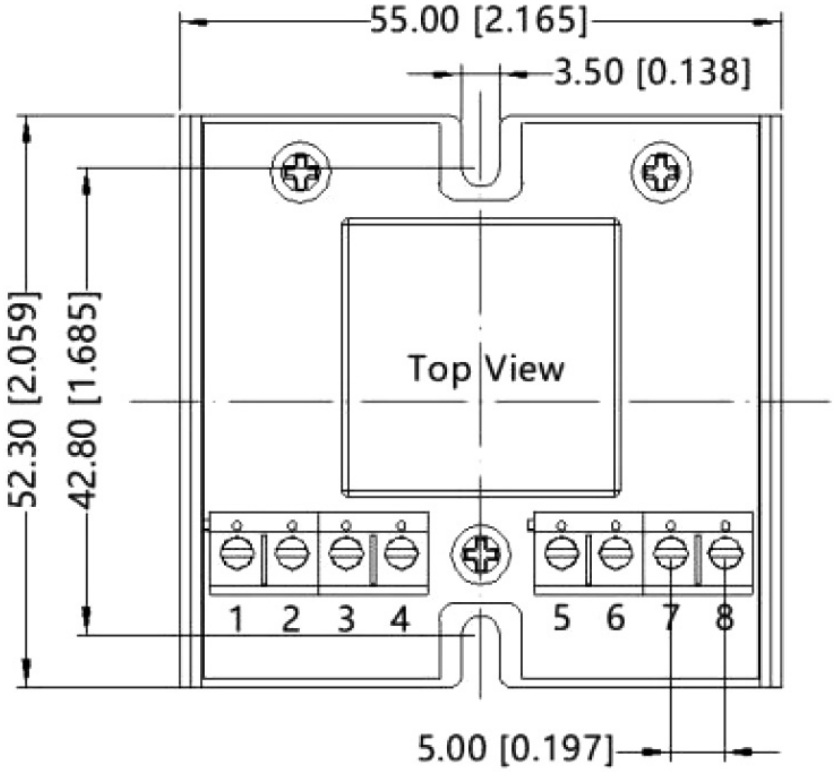

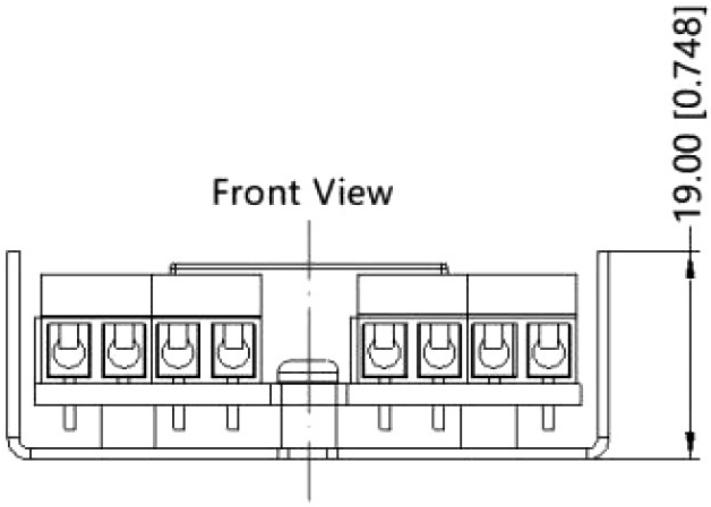

DERATING CURVES

TEMPERATURE DERATING CURVE (single output models)

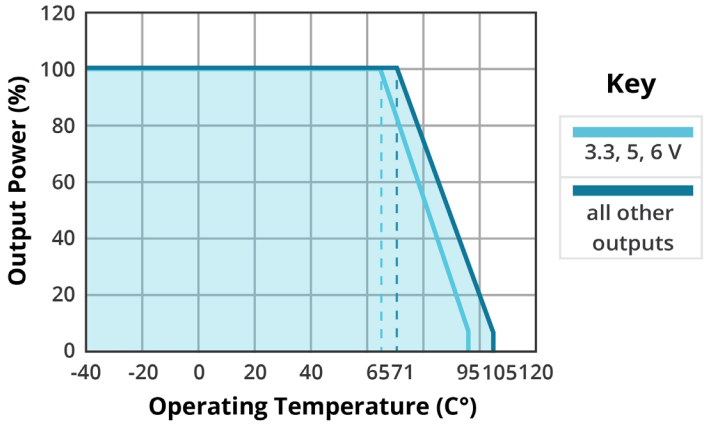

TEMPERATURE DERATING CURVE (dual output models)

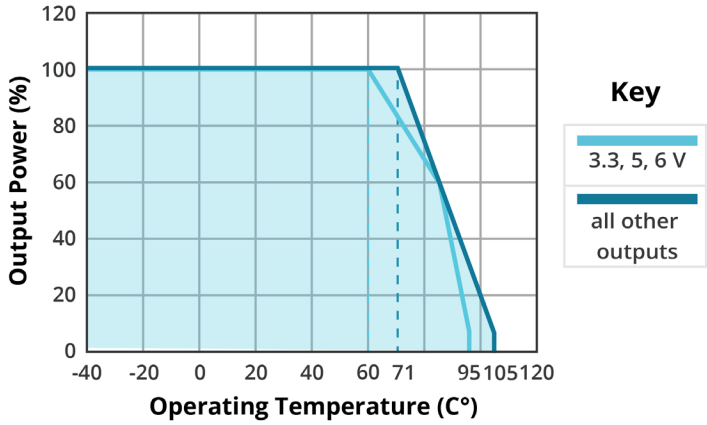

EFFICIENCY CURVES

EFFICIENCY VS INPUT VOLTAGE DQD20-24-S5-U

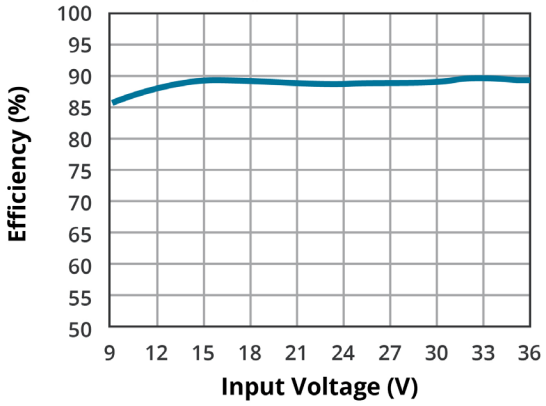

EFFICIENCY VS OUTPUT CURRENT DQD20-24-S5-U

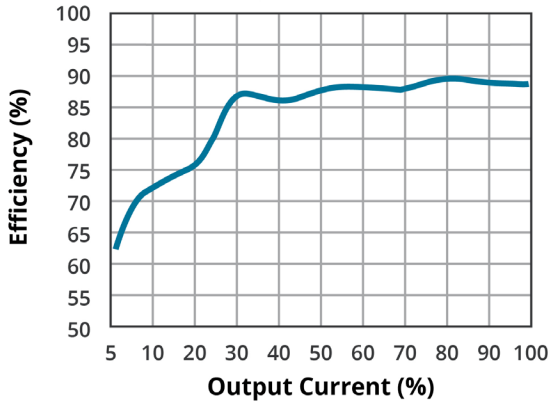

EFFICIENCY VS INPUT VOLTAGE DQD20-48-S5U

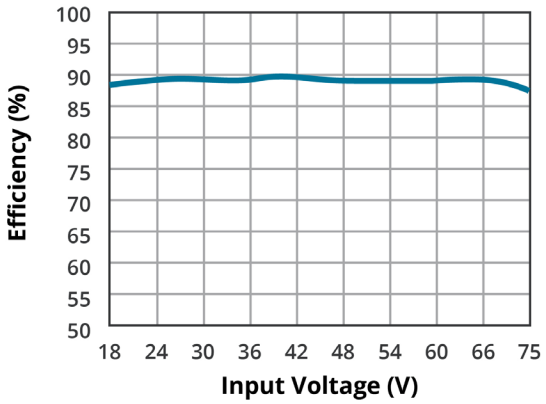

EFFICIENCY VS OUTPUT CURRENT DQD20-48-S5-U

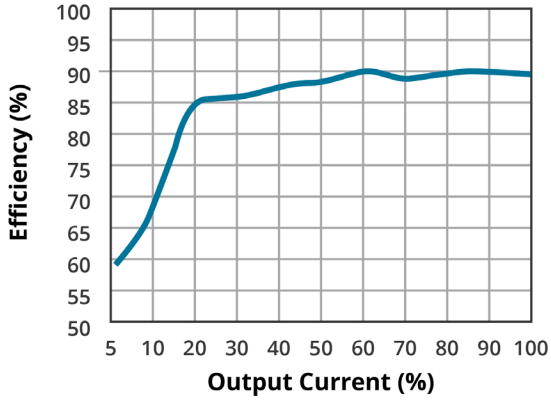

EFFICIENCY CURVES (CONTINUED)

EFFICIENCY VS INPUT VOLTAGE
DQD20-24-D5-U

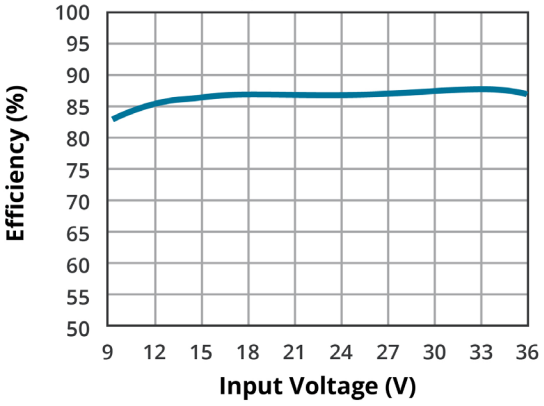

EFFICIENCY VS OUTPUT CURRENT
DQD20-24-D5-U

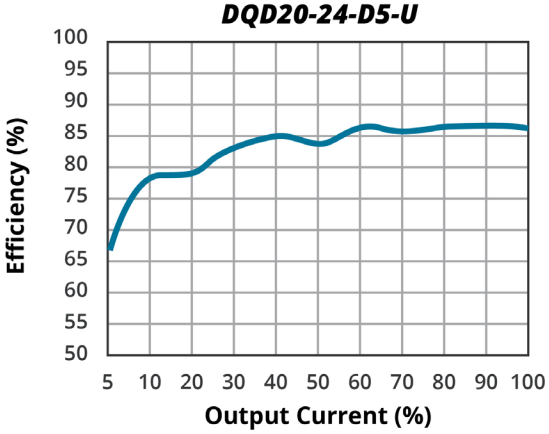

EFFICIENCY VS INPUT VOLTAGE
DQD20-48-D5-U

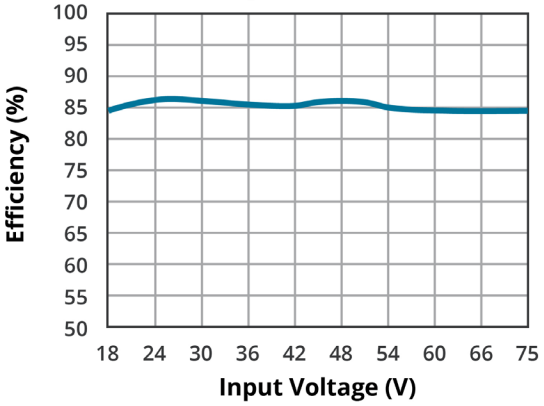

EFFICIENCY VS OUTPUT CURRENT
DQD20-48-D5-U

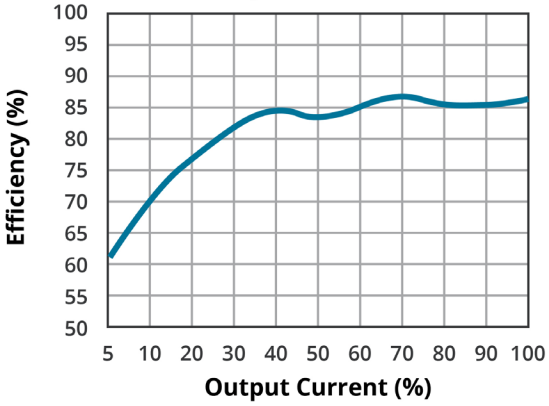

APPLICATION NOTES

Figure 1
Single output

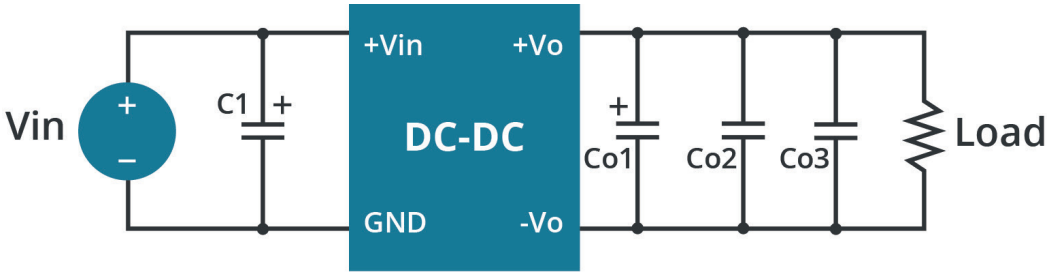

Table 1

Vout (Vdc)	C1 (µF)	Co1 (µF)	Co2 (µF)	Co3 (µF)
3.3, 5, 6	100 µF/ 100 V	100 µF/ 16 V	10 µF/ 50 V	0.1 µF/ 16 V
9, 12, 15	100 µF/ 100 V	100 µF/ 25 V	10 µF/ 50 V	0.1 µF/ 25 V
18, 24	100 µF/ 100 V	47 µF/ 50 V	10 µF/ 50 V	0.1 µF/ 50 V

Figure 2
Dual output

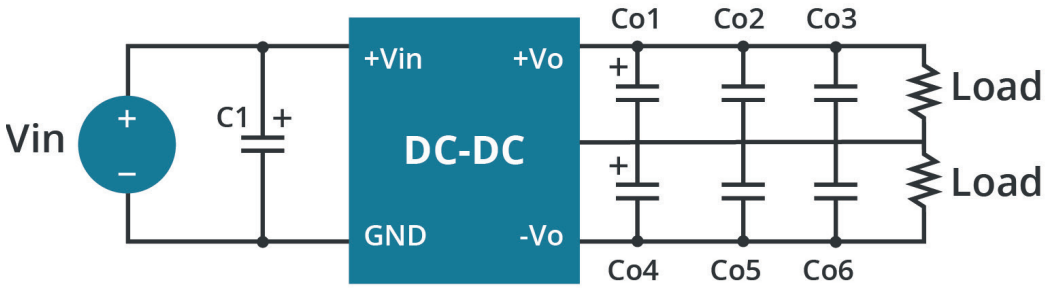

Table 2

Vout (Vdc)	C1 (µF)	Co1/Co4 (µF)	Co2/Co5 (µF)	Co3/Co6 (µF)
3.3, 5, 6	100 µF/ 100 V	100 µF/ 16 V	10 µF/ 50 V	0.1 µF/ 16 V
9, 12, 15	100 µF/ 100 V	100 µF/ 25 V	10 µF/ 50 V	0.1 µF/ 25 V
18, 24	100 µF/ 100 V	47 µF/ 50 V	10 µF/ 50 V	0.1 µF/ 50 V

Note: All DC-DC converters in this series are tested prior to delivery using the recommended circuits shown in Figures 1 and 2.
To further minimize input and output ripple, consider increasing the values of input and output capacitors (C1, Co1, Co2, Co3, Co4, Co5, Co6) or selecting capacitors with low equivalent series resistance (ESR).
Ensure that the total capacitance does not exceed the product's specified maximum capacitive load.

EMC RECOMMENDED CIRCUIT

Figure 3
Single output

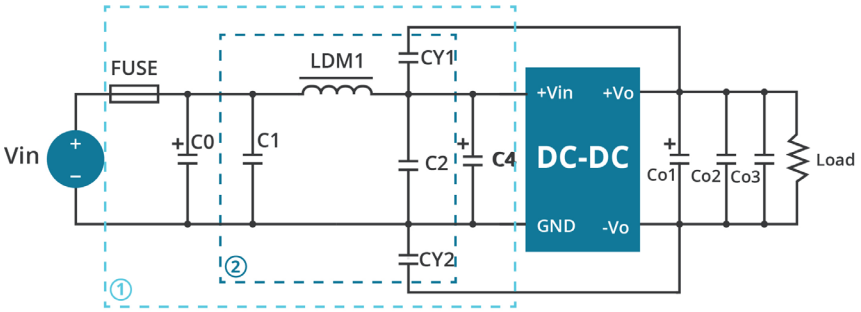

Table 3

COMPONENT	24 Vdc	48 Vdc
Fuse	TBD by customer	
C0, C4	330 µF/50 V	330 µF/100 V
C1, C2	4.7 µF/50 V	4.7 µF/100 V
LDM1	10 µH/4 A	10 µH / 2 A
Co1, Co2, Co3	refer to Table 1	
CY1, CY2	2.2 nF/2 kV	

Note: Section 1 of the circuit diagram provides EMI filtering, while Section 2 is dedicated to EMS. Both sections can be customized to meet specific requirements or application needs.

Figure 4
Dual output

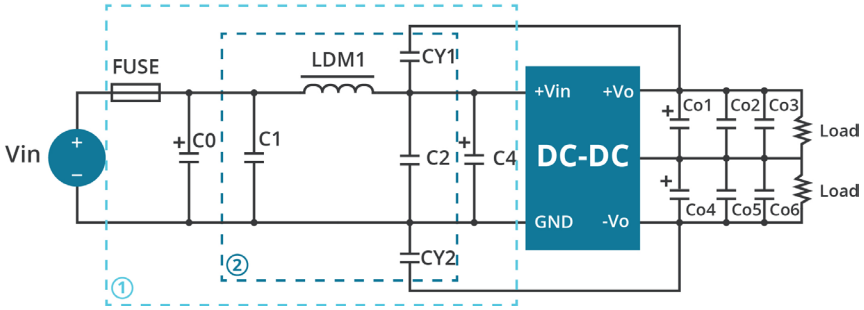

Table 4

COMPONENT	24 Vdc	48 Vdc
Fuse	TBD by customer	
C0, C4	330 µF/50 V	330 µF/100 V
C1, C2	4.7 µF/50 V	4.7 µF/100 V
LDM1	10 µH	
Co1, Co2, Co3 Co4, Co5, Co6	refer to Table 2	
CY1, CY2	2.2 nF/2 kV	

Note: Section 1 of the circuit diagram provides EMI filtering, while Section 2 is dedicated to EMS. Both sections can be customized to meet specific requirements or application needs.

APPLICATION NOTES

Figure 5

Trim up

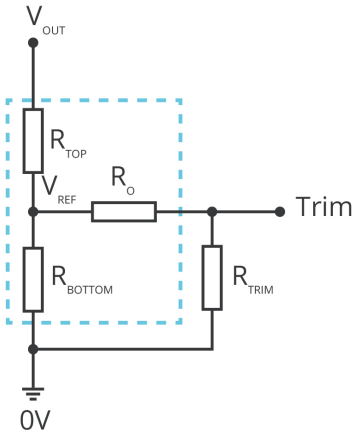

Trim down

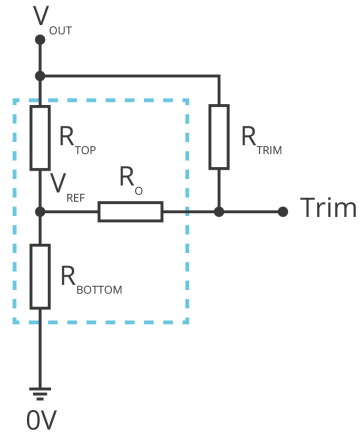

$$R_{TRIM} = \frac{a \cdot R_{BOTTOM}}{R_{BOTTOM} - a} - R_O \qquad a = \frac{V_{REF}}{V_{OUT} - V_{REF}} \cdot R_{TOP}$$

Formula for Trim up

$$R_{TRIM} = \frac{a \cdot R_{TOP}}{R_{TOP} - a} - R_O \qquad a = \frac{V_{OUT} - V_{REF}}{V_{REF}} \cdot R_{BOTTOM}$$

Formula for Trim down

Table 5

V_{NOM}	R_{TOP}	R_{BOTTOM}	R_O	V_{REF}
(Vdc)	(kΩ)	(kΩ)	(kΩ)	(V)
3.3	10	6.064	13.622	1.24
5	2.4	2.344	13.622	2.5
6	10	6.982	13.622	2.5
9	12	4.602	17.346	2.5
12	8.2	2.153	17.346	2.5
15	12	2.388	21.016	2.5
18	24	3.868	33.275	2.5
24	22	2.525	10.714	2.5

Note: Value for R_{TOP}, R_{BOTTOM}, R_O, and V_{REF} refer to Table 5 (fixed internal values).
R_{TRIM}: Trim resistance
a: User-defined parameter, no actual meanings
V_{NOM}: Nominal output voltage
V_{OUT}: Target output voltage

REVISION HISTORY

rev.	description	date
1.0	initial release	09/08/2026

The revision history provided is for informational purposes only and is believed to be accurate.

CUI INC
a bel group

15575 SW Sequoia Pkwy #100
Portland, OR 97224
800.275.4899

Fax 503.612.2383
Belfuse.com
powersupport@belf.com

CUI offers a two (2) year limited warranty. Complete warranty information is listed on our website.

CUI reserves the right to make changes to the product at any time without notice. Information provided by CUI is believed to be accurate and reliable. However, no responsibility is assumed by CUI for its use, nor for any infringements of patents or other rights of third parties which may result from its use.

CUI products are not authorized or warranted for use as critical components in equipment that requires an extremely high level of reliability. A critical component is any component of a life support device or system whose failure to perform can be reasonably expected to cause the failure of the life support device or system, or to affect its safety or effectiveness.