SERIES: AE40B-UW | **DESCRIPTION:** DC-DC CONVERTER

FEATURES

- up to 40 W isolated output
- ultra-wide 6:1 input voltage range, 250~1,500 V
- 5,600 Vdc isolation
- input reverse polarity and under voltage protection
- output over-voltage, over current, and short circuit protection
- reinforced insulation
- PCB, chassis and DIN-rail mounting styles available
- EN/BS EN 62109 certified
- meets UL 1741, CSA C22.2 No. 107.1



MODEL

MODEL	input voltage range (Vdc)	output voltage nom (Vdc)	output current max (A)	output power max (W)	ripple & noise[1] max (mVp-p)	efficiency[2] typ (%)
AE40B-UW-S12	250~1500	12	3.34	40	200	86
AE40B-UW-S24	250~1500	24	1.67	40	200	89
AE40B-UW-S28	250~1500	28	1.43	40	200	89

Notes: 1. Measured at nominal input, 20 MHz bandwidth oscilloscope, the "tip and barrel method" is used for ripple and noise test.
2. Measured at 800 Vdc input voltage, full load.
3. All specifications are measured at Ta=25°C, humidity < 75%, nominal input voltage, and rated output load unless otherwise specified.

PART NUMBER KEY

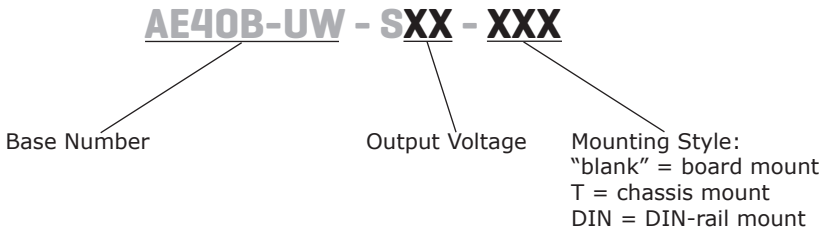

Please read our datasheet & drawing disclaimer here.

INPUT

parameter	conditions/description	min	typ	max	units
operating input voltage	 transient (30s)	250		1,500 1,700	Vdc Vdc
under voltage shutdown[4]	shut-down range turn-on range	140 180		240 250	Vdc Vdc
current	at 300 Vdc at 800 Vdc			0.20 0.08	A A
inrush current	at 800 Vdc at 1,500 Vdc		60 90		A A
reverse input voltage protection	yes				
input fuse	4 A / 1,500 Vdc (external), required				

Note: 4. Hysteresis voltage typical value: 50V

OUTPUT

parameter	conditions/description	min	typ	max	units
maximum capacitive load	12 Vdc output model 24 Vdc output model 28 Vdc output model			3,000 820 820	µF µF µF
total accuracy			±1	±2	%
line regulation	rated load		±0.5		%
load regulation	at 800 Vdc		±0.5		%
start-up time[5]	250 ~ 1,500 Vdc		0.5	1.0	s
hold-up time	at full load, 25°C, 800 Vdc input		10		ms
switching frequency			65		kHz
temperature coefficient			±0.02		%/°C

Note: 5. Full input voltage / output load range (The cooling-time between input power-off and power-on again is greater than 15s).

PROTECTIONS

parameter	conditions/description	min	typ	max	units
over voltage protection	clamp or hiccup 12 Vdc output model 24 Vdc output model 28 Vdc ouput model			 20 30 35	 Vdc Vdc Vdc
over current protection	auto recovery	110			%
short circuit protection	continuous, auto recovery, hiccup				

SAFETY AND COMPLIANCE

parameter	conditions/description	min	typ	max	units
isolation voltage	input to output for 1 minute, 3 mA max	4,000			Vac
safety approvals	certified to 62109: EN, BS EN designed to meet 1741: UL				
conducted emissions	EN IEC 61000-6-4 (See Fig. 2 for recommended circuit)				
radiated emissions	EN IEC 61000-6-4 (See Fig. 2 for recommended circuit)				
ESD	IEC/EN61000-4-2 Contact ±6KV/Air ±8KV, perf. Criteria B				
radiated immunity	EC/EN61000-4-3 10V/m, perf. Criteria A				
EFT/burst	IEC/EN61000-4-4 ±2KV, ±4KV (See Fig 2 for recommended circuit), perf. Criteria B				
surge	IEC/EN61000-4-5 line to line ±1KV, line to line ±2KV (See Fig 2 for recommended circuit), perf. Criteria B				
conducted immunity	IEC/EN61000-4-6 10Vrms, perf. Criteria A				
MTBF	as per MIL-HDBK-217F, 25°C	300,000			hours
RoHS	yes				

ENVIRONMENTAL

parameter	conditions/description	min	typ	max	units
operating temperature	see derating curves	-40		85	°C
storage temperature		-40		85	°C
storage humidity				95	%
altitude				5,000	m

SOLDERABILITY

parameter	conditions/description	min	typ	max	units
hand soldering	for 3~5 seconds	350	360	370	°C
wave soldering	for 5~10 seconds	255	260	265	°C

MECHANICAL

parameter	conditions/description	min	typ	max	units
dimensions	board mount: 109.00 x 58.50 x 30.00 [4.291 x 2.303 x 1.181 inch] chassis mount: 135.00 x 70.00 x 38.50 [5.315 x 2.756 x 1.516 inch] din-rail mount: 137.00 x 70.00 x 44.00 [5.394 x 2.756 x 1.732 inch]				mm mm mm
case material	black flame-retardant heat-resistant plastic (UL94V-0)				
weight	board mount chassis mount din-rail mount		270 350 420		g g g
cooling	natural convection				

MECHANICAL DRAWING

Board mount

units: mm [inch]
tolerance: ±0.50[±0.020]
pin diameter tolerance: ±0.10[±0.004]
pin tolerance (H): ±1.50[±0.059]

PIN CONNECTIONS	
PIN	Function
1	-Vin
2	+Vin
3	+Vout
4	-Vout

NC=no connection

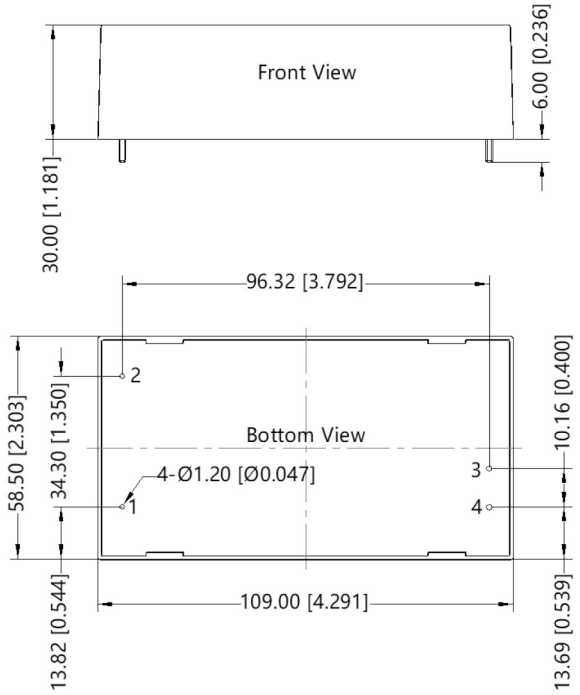

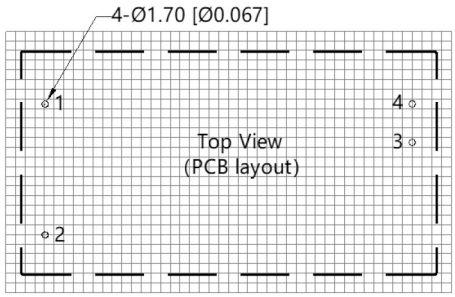

Note: Grid 2.54*2.54mm

MECHANICAL DRAWING (CONTINUED)

Chassis mount

units: mm [inch]
wire range: 24~12 AWG
general tolerance: ±1.00[±0.040]
tightening torque: Max 0.4 N·m

PIN CONNECTIONS	
PIN	Function
1	-Vin
2	NC
3	NC
4	NC
5	+Vin
6	NC
7	-Vout
8	+Vout

NC=no connection

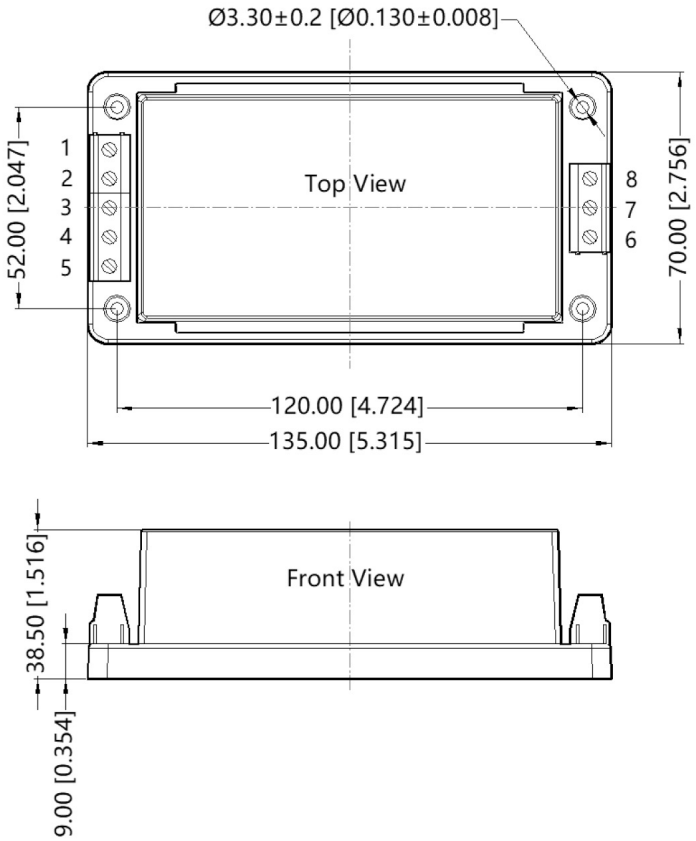

Din-rail mount

units: mm [inch]
wire range: 24~12 AWG
tightening torque: Max 0.4 N·m
mounting rail: TS35, rail needs to connect safety ground
tolerance: ±1.00[±0.040]

PIN CONNECTIONS	
PIN	Function
1	-Vin
2	NC
3	NC
4	NC
5	+Vin
6	NC
7	-Vout
8	+Vout

NC=no connection

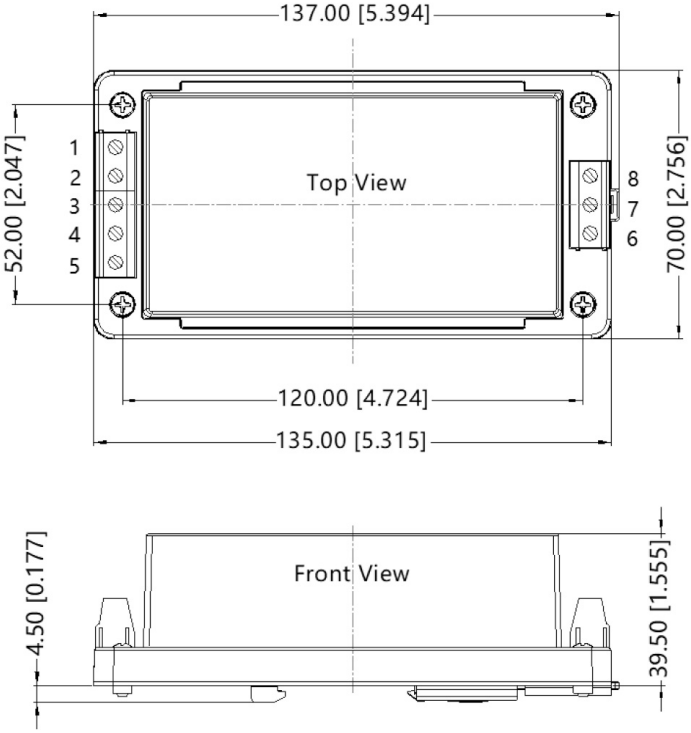

DERATING CURVES

TEMPERATURE DERATING CURVE (250~300 Vdc Input voltage)

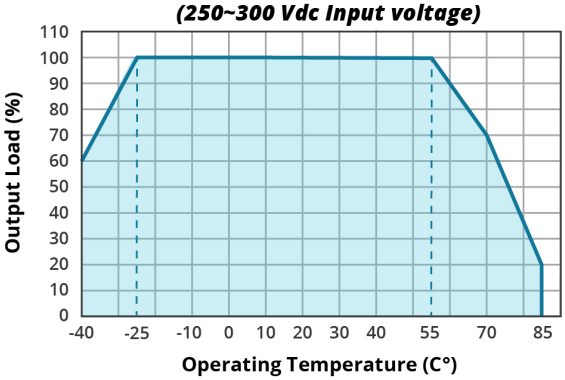

TEMPERATURE DERATING CURVE (300~1500 Vdc Input voltage)

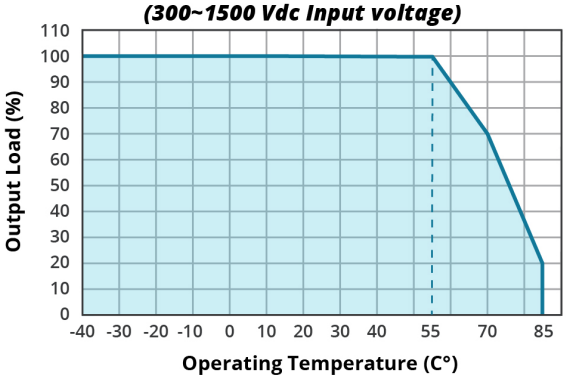

INPUT VOLTAGE DERATING CURVE (25°C)

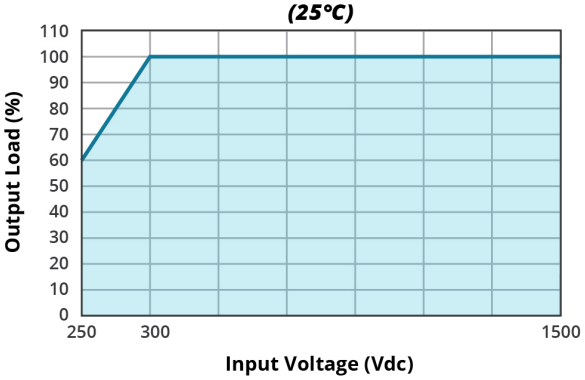

ALTITUDE DERATING CURVE

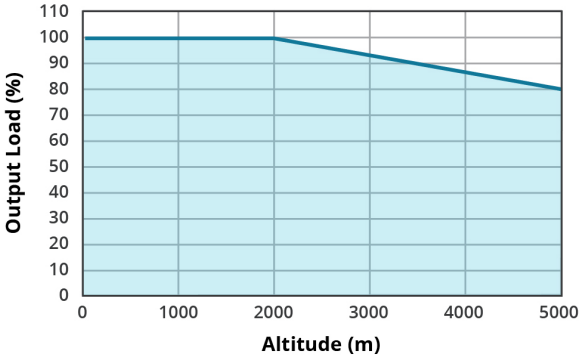

Note: 6. With an input between 250-300VDC, the output power must be derated as per temperature derating curves.
7. This product is suitable for applications using natural convection; for applications in closed environment please consult CUI.

EFFICIENCY CURVES

EFFICIENCY VS INPUT VOLTAGE (full load)

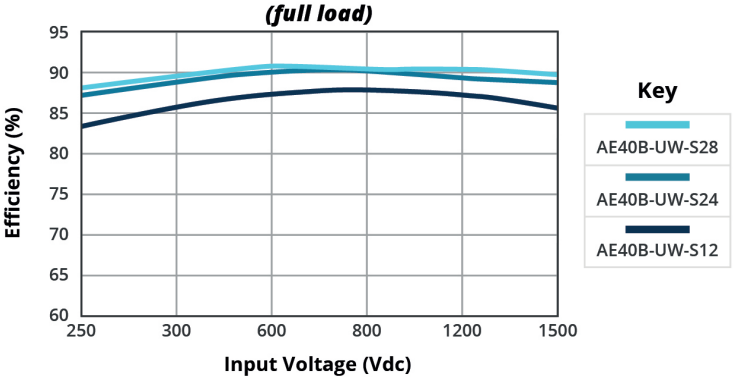

EFFICIENCY VS OUTPUT LOAD (Vin = 800 Vdc)

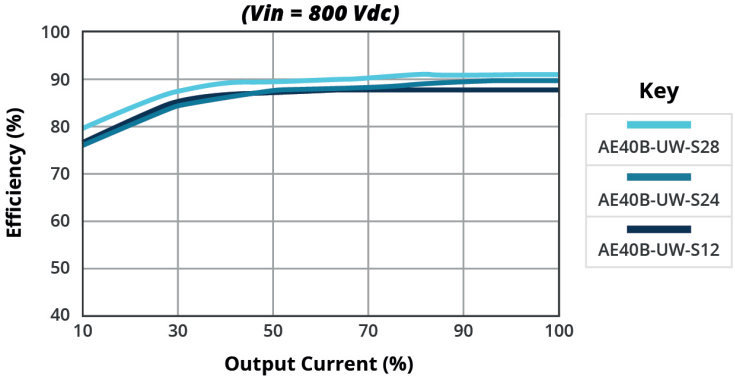

APPLICATION CIRCUIT

Figure 1

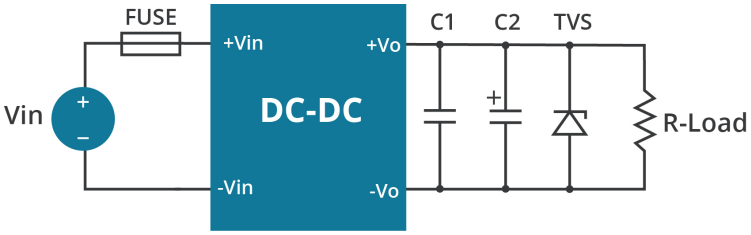

Table 1

Vout (Vdc)	Fuse	C1 (μF/V)	C2 (μF/V)	TVS
12	4A / 1500Vdc, required	1 μF/35V	120μF/25V	SMBJ20A
24			68μF/35V	SMBJ30A
28			68μF/50V	SMBJ36A

We recommend using an electrolytic capacitor with high frequency and low ESR rating for C2 (refer to manufacture's datasheet). Choose a capacitor voltage rating with at least 20% margin, in other words not exceeding 80%. C1 is a ceramic capacitor, used to filter high-frequency noise. TVS is a recommended suppressor diode to protect the application in case of a converter failure.

EMC RECOMMENDED CIRCUIT

Figure 2
EMC application for higher compliance requirements
(output parameters are shown in Figure 1)

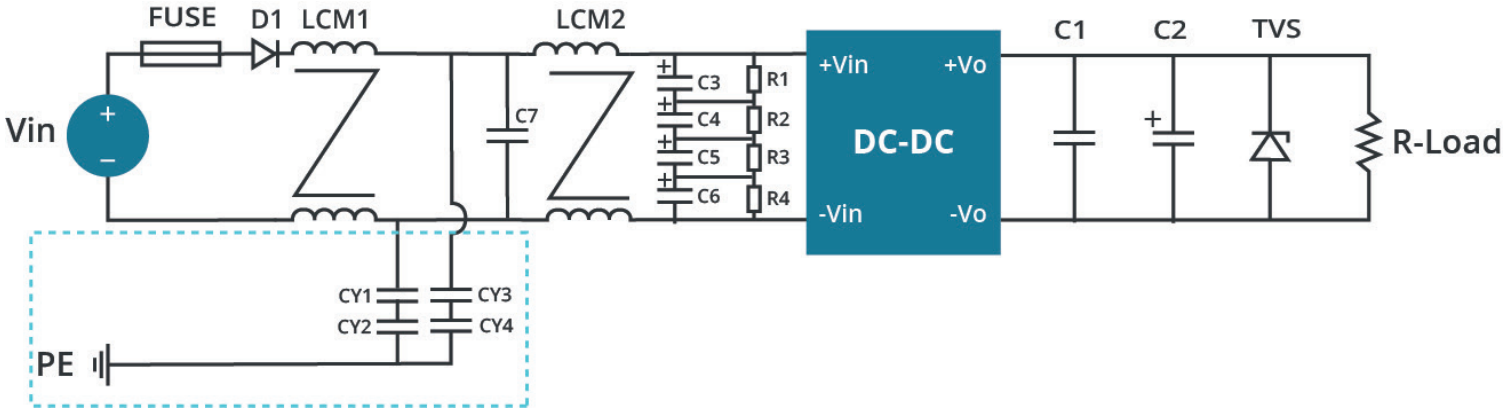

Table 2

Recommended External Circuit Components	
C7	safety capacitor 474K/>1500 Vac
C3, C4, C5, C6	10 μF/450 Vdc
R1, R2, R3, R4	1 MΩ/2 W
LCM1, LCM2	20 mH/1 A
CY1, CY2, CY3, CY4	102 M/1500 Vdc
FUSE	4 A/1500 Vdc, required
D1	4 A/3000 V

Note: 8. Adding D1 if there is a requirement of input reverse polarity protection for C3-C6.
9. Remove CY1, CY2, CY3, CY4 if no conducted emissions requirements.

REVISION HISTORY

rev.	description	date
1.0	initial release	10/02/2023
1.01	features updated	11/21/2023

The revision history provided is for informational purposes only and is believed to be accurate.

CUI INC
a bel group

Headquarters
20050 SW 112th Ave.
Tualatin, OR 97062
800.275.4899

Fax 503.612.2383
cui.com
techsupport@cui.com

CUI offers a two (2) year limited warranty. Complete warranty information is listed on our website.

CUI reserves the right to make changes to the product at any time without notice. Information provided by CUI is believed to be accurate and reliable. However, no responsibility is assumed by CUI for its use, nor for any infringements of patents or other rights of third parties which may result from its use.

CUI products are not authorized or warranted for use as critical components in equipment that requires an extremely high level of reliability. A critical component is any component of a life support device or system whose failure to perform can be reasonably expected to cause the failure of the life support device or system, or to affect its safety or effectiveness.