SERIES: 6 W MULTI-BLADE **DESCRIPTION: SWITCHING POWER SUPPLY**

FEATURES

- universal AC input
- regulated output voltage
- interchangeable input blades
- short circuit, over load protection
- meets EISA / efficiency level IV regulations
- custom designs available



RoHS

Discontinued

MODEL	output voltage	output current		output wattage	ripple*	efficiency level	cord length
	nominal (V dc)	min (A)	max (A)	max (W)	max. (mVp-p)		(mm)
EMS050120	5	0	1.2	6	100	IV	1830 +150/-0
EMS060100	6	0	1	6	100	IV	1830 +150/-0
EMS090066	9	0	0.66	6	100	IV	1830 +150/-0
EMS120050	12	0	0.5	6	100	IV	1830 +150/-0
EMS150040	15	0	0.4	6	150	IV	1830 +150/-0
EMS180033	18	0	0.33	6	180	IV	1830 +150/-0
EMS240025	24	0	0.25	6	240	IV	1830 +150/-0

*at full load, 100 ~ 240 V ac input, measured at 20MHz bandwidth with a 10 uF electrolytic cap and a 0.1 uF ceramic cap on the output

PART NUMBER KEY

EMS050120 - PXXXX - SZ - CXX

- EMS050120: Base Number, example of 5 V dc, 1.2 A
- PXXXX: DC Plug type: see output plug options on page 5
- SZ: Factory Designation
- CXX: Reserved for custom configurations

Please read our datasheet & drawing disclaimer here.

SERIES: 6 W MULTI-BLADE **DESCRIPTION: SWITCHING POWER SUPPLY**

INPUT

parameter	conditions/description	min	nom	max	units
rated input voltage		100		240	V ac
input voltage range		90		264	V ac
rated frequency		50		60	Hz
frequency range		47		63	Hz
rated input current				0.3	A
inrush current	115 V ac, full load, cold start, 25˚C 230 V ac, full load, cold start, 25˚C			15 30	A A
no load power consumption	100 ~ 240 V ac input			0.3	W

OUTPUT

parameter	conditions/description	min	nom	max	units
line regulation			±1		%
load regulation			±5		%
over voltage protection	output shut down	140%		200%	V dc
short circuit protection	output shut down and auto-restart				

SAFETY & EMI

parameter	conditions/description	min	nom	max	units
HI-POT	input to output at 10 mA for 1 second			3000 4242	V ac V ac
insulation resistance	input to output at 500 V dc	100			MΩ
safety approvals	UL/cUL, CB (IEC60950-1), CE (GS/TUV EN60950-1)				
EMI standard	FCC part 15 class B, CE (EN55022, EN55024)				
leakage current				0.25	mA
RoHS compliant	yes				

Discontinued

ENVIRONMENTAL

parameter	conditions/description	min	nom	max	units
operating temperature		0		40	˚C
operating humidity		20		80	%
storage temperature		-10		70	˚C
storage humidity		10		90	%

SERIES: 6 W MULTI-BLADE **DESCRIPTION: SWITCHING POWER SUPPLY**

MECHANICAL DRAWING

input plug	interchangeable pin (UL, UK, VDE, SAA)
case size	64 L x 40.5 W x 30 H mm tolerance: ±1 mm

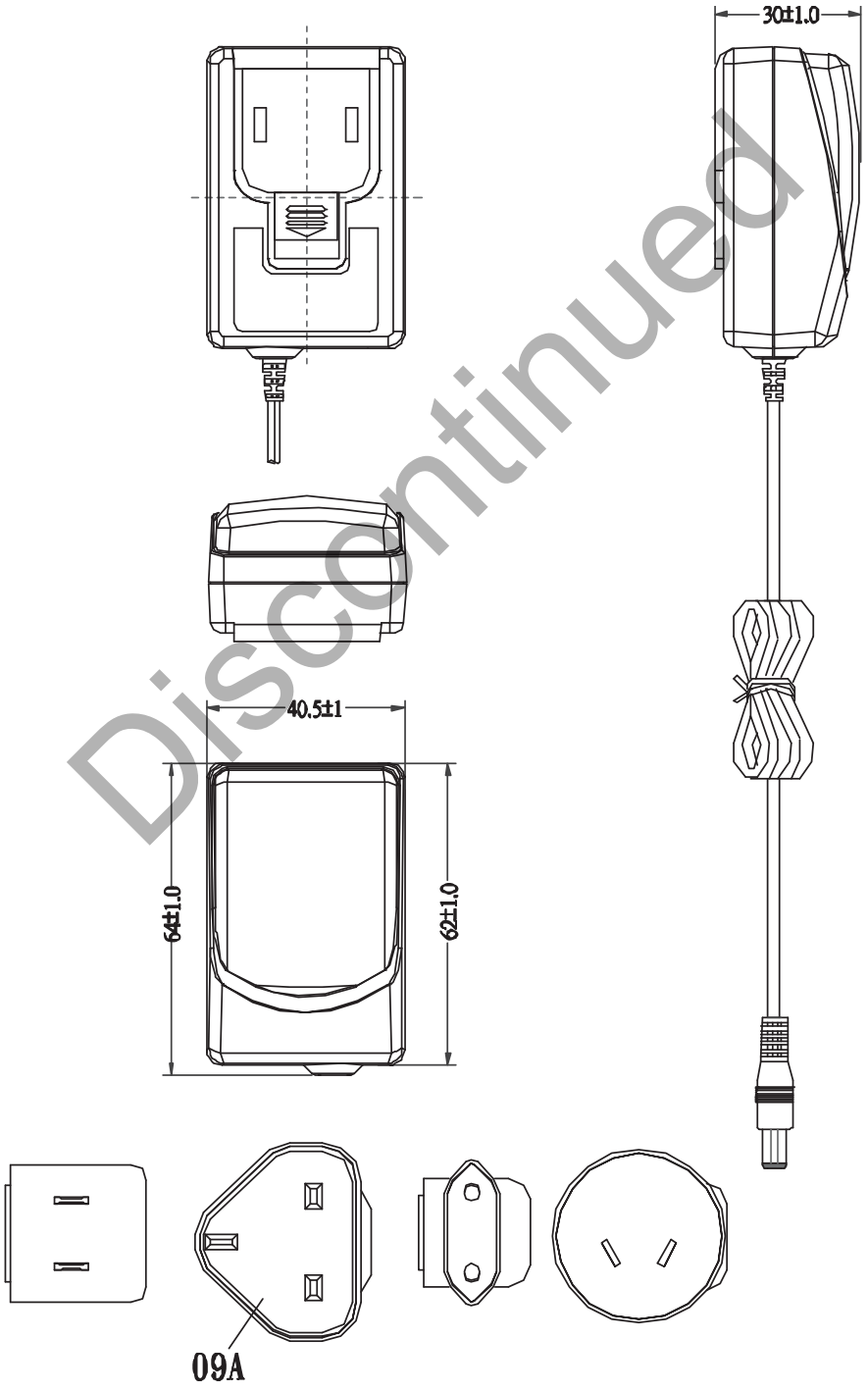

Discontinued

SERIES: 6 W MULTI-BLADE **DESCRIPTION: SWITCHING POWER SUPPLY**

DC CORD

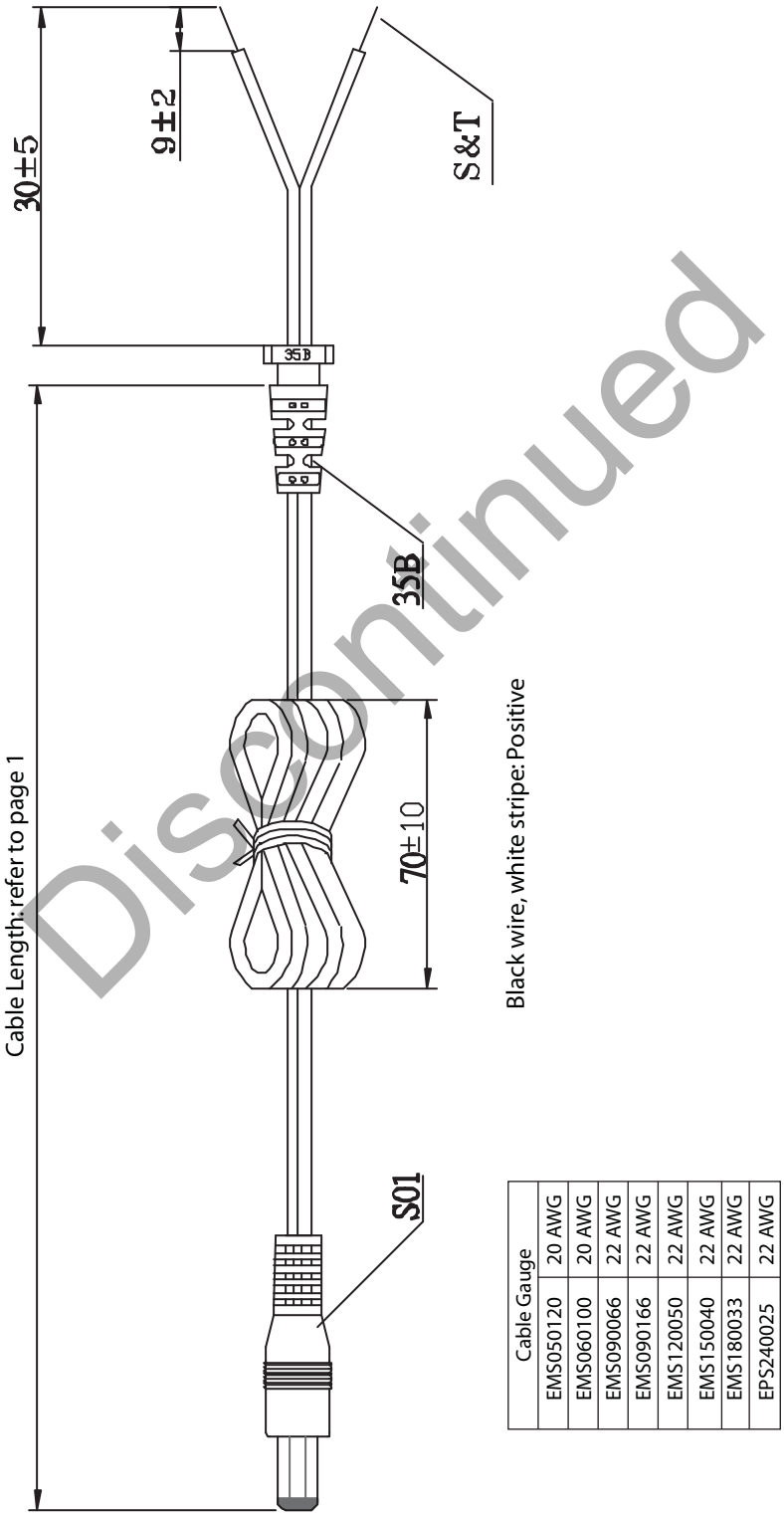

Cable Gauge	
EMS050120	20 AWG
EMS060100	20 AWG
EMS090066	22 AWG
EMS090166	22 AWG
EMS120050	22 AWG
EMS150040	22 AWG
EMS180033	22 AWG
EPS240025	22 AWG

Discontinued

SERIES: 6 W MULTI-BLADE **DESCRIPTION: SWITCHING POWER SUPPLY**

OUTPUT PLUG OPTIONS

3.5 mm Phono Plug

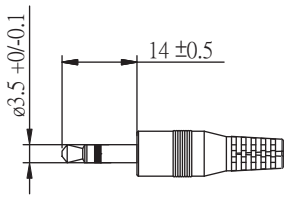

P1

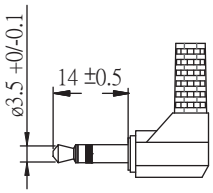

P1R

*Tip positive

Standard DC Plug

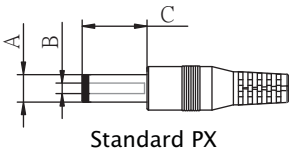

Standard PX

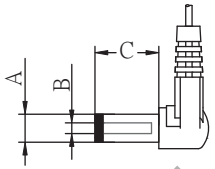

Right Angle PXR

	A	B	C	Unit
P5/P5R	5.5	2.1	9.5	mm
P6/P6R	5.5	2.5	9.5	mm
P7/P7R	3.5	1.3	9.5	mm
P8/P8R	3.8	1.35	9.5	mm
P9/P9R	3.8	1.05	9.5	mm

Locking DC Plug

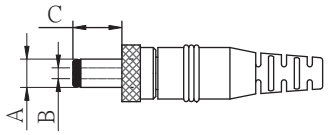

	A	B	C	Unit
P10	5.5	2.1	9.5	mm
P11	5.5	2.5	9.5	mm

EIAJ Plugs

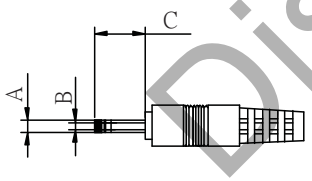

Standard PXX

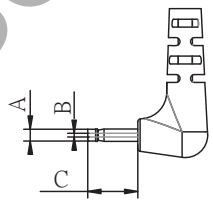

Right Angle PXXR

	EIAJ	A	B	C	D	Unit
P12/P12R	EIAJ-1	2.35	0.7	9.5	NA	mm
P13/P13R	EIAJ-2	4.0	1.7	9.5	5.0	mm
P14/P14R	EIAJ-3	4.75	1.7	9.5	5.0	mm

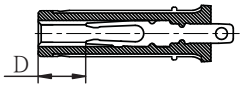

Stripped and Tinned

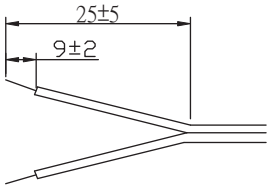

DC PLUG TYPE

ST

stripped and tinned

PXX X X

Plug type

Plug angle:
"blank" = standard
R = right angle

Plug polarity:
"blank" = N/A
P = center positive
N = center negative

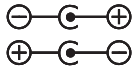

*Contact CUI for additional output plug options.

Discontinued

SERIES: 6 W MULTI-BLADE **DESCRIPTION: SWITCHING POWER SUPPLY**

INDIVIDUAL PACKAGING

tolerance	± 1 mm

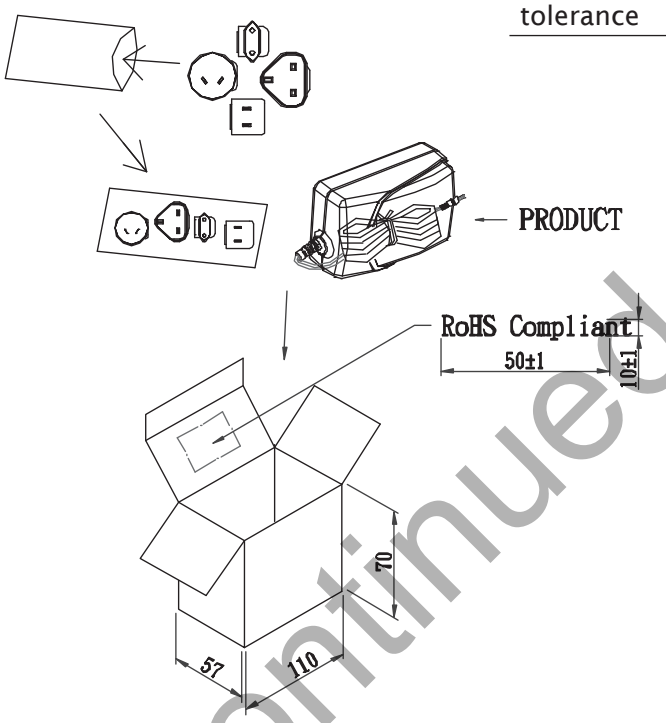

Discontinued

PACKAGING

tolerance	+7 / -0 mm

CARTON INTERNAL SIZE:450*308*300mm
Q'TY: 80PCS(20*4)
"RoHS Compliant"

