EOL-Last Buy Date is September 30, 2024
The replacement series is the 0651C(0651Cxxxx-xx)/0651P(0650Pxxxx-xx)

Type 5SF / 5SFP

Quick-acting Fuse Series (Low Breaking Capacity)

5SF/5SFP Series, 5x20mm Glass Tube Quick-acting Fuse — RoHS Compliant

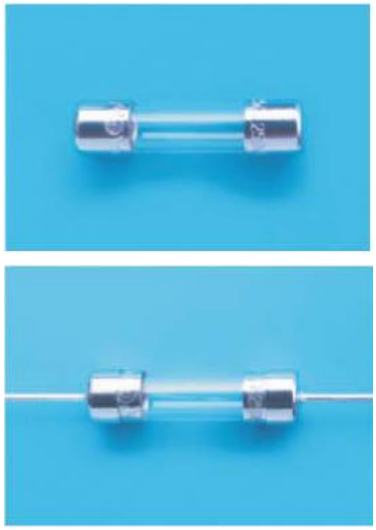

Description

5x20mm quick-acting, low breaking capacity, glass tube body cartridge fuse designed, approved and complied with IEC 60127-2,standard sheet 2.

Features

- Meet IEC standard 60127-2, sheet 2
- Wide operating temperature range
- Bulk and Tape & Reel packing available
- Full compliance with EU Directive 2011/65/EU and amending directive 2015/863
- Halogen Free
- Lead Free

Applications

Provide individual protection for components or internal circuits.

- Power supplies
- Battery charger
- Monitor
- Adapter

LEAD FREE =
HALOGEN FREE =

Physical Specifications

Materials	Body : Glass
	Cap : Nickel Plated Brass Caps
	Leads : Matte Tin Plated Copper
Marking	On Fuse :
	"bel", "F", "Current Rating", "L","250V",
	"Appropriate Safety Logos", " ✓ "（ RoHS compliant）
	On Label :
	"bel","5SF"or"5SFP","F","Current Rating","L","Voltage Rating","Interrupting Rating","Appropriate Safety Logos" and " ","(China RoHS compliant).

Electrical Characteristics (IEC-127-2 STANDARD SHEET 2)

Rated Current	1.5 In	2.1 In	2.75 In		4 In		10 In
	MIN	MAX	MIN	MAX	MIN	MAX	MAX
500mA to 6.3A	1	30	50	2	10	300	20
8A to 10A	1	30	50	2	10	400	40
	hr.	min.	ms	sec	ms	ms	ms

In clause 9.2, the test voltage for 5SFP ratings from 1A to 6.3A is 63VDC.

Safety Agency Approvals

Safety Agency	Safety Agency Certificate	Ampere Rating/ Voltage Rating	Ampere Range / Volt @ I.R. ability*
	SE-S-2002382	500mA-10A /250V AC	500mA-6.3A/250V AC@35A or 10 In whichever is greater
	40000509		
	E20624		500mA-10A/250V AC@35A or 10 In whichever is greater
	LR39772		
	Self-declaration No: 2020970207000128		500mA-6.3A/250V AC@35A or 10 In whichever is greater
*I.R.= Interrupting Rating = Short Circuit Rating(Amps)			

Type 5SF / 5SFP

Environmental Specifications

Shock Resistance	MIL-STD-202G, Method 213B, Test Condition 1 (100 G's peak for 6 milliseconds; Sawtooth waveform)
Vibration Resistance	MIL-STD-202G, Method 201A (10-55 Hz, 0.06 inch, total excursion).
Salt Spray Resistance	MIL-STD-202G, Method 101E, Test Condition B (48 hrs).
Insulation Resistance	MIL-STD-202G, Method 302, Test Condition B (After Opening) 100,000 ohms minimum.
Solderability	MIL-STD-202G, Method 208H
Resistance to solder Heat	MIL-STD-202G, Method 210F, Test Condition B (260+/-5℃,10+/-1 sec)
Thermal Shock	MIL-STD-202G, Method 107G, Test Condition B (-65℃ to +125℃).
Operating Temperature	-55℃ to +125℃
Terminal Strength	IEC-68-2-21

Electrical Specifications

Catalog Number	Ampere Rating	Typical Cold Resistance (ohms)	Volt-drop @100%In (Volt) max.	Voltage and Interrupting Ratings	Melting I²T <10 mSec (A² Sec)	Melting I²T @10 In (A² Sec)	Maximum Power Dissipation (W)	Agency Approvals				
								c UL us				
5SF(P) 500-R	500mA	0.31	0.27	See Table of Safety Approvals on Page 1 for Voltage and associated Interrupting Ratings	0.40	0.40	0.80	Y	Y	Y	Y	Y
5SF(P) 630-R	630mA	0.152	0.13		0.64	0.65	0.28	Y	Y	Y	Y	Y
5SF(P) 800-R	800mA	0.112	0.13		1.0	1.0	0.32	Y	Y	Y	Y	Y
5SF(P) 1-R	1A	0.088	0.13		1.6	1.7	0.40	Y	Y	Y	Y	Y
5SF(P) 1.25-R	1.25A	0.065	0.12		2.5	2.7	0.45	Y	Y	Y	Y	Y
5SF(P) 1.6-R	1.6A	0.050	0.11		4.0	4.4	0.75	Y	Y	Y	Y	Y
5SF(P) 2-R	2A	0.034	0.10		6	7	0.65	Y	Y	Y	Y	Y
5SF(P) 2.5-R	2.5A	0.026	0.10		10	11	0.85	Y	Y	Y	Y	Y
5SF(P) 3.15-R	3.15A	0.022	0.10		16	18	1.20	Y	Y	Y	Y	Y
5SF(P) 4-R	4A	0.017	0.10		26	30	1.43	Y	Y	Y	Y	Y
5SF(P) 5-R	5A	0.013	0.10		41	48	1.89	Y	Y	Y	Y	Y
5SF(P) 6.3-R	6.3A	0.010	0.10		65	74	2.50	Y	Y	Y	Y	Y
5SF(P) 8-R	8A	0.007	0.08		103	119	3.30	Y	Y			
5SF(P) 10-R	10A	0.006	0.08		163	192	4.00	Y	Y			

Consult manufacturer for other ratings

Bel Fuse Inc.
300 Executive Drive, Suite 300,
West Orange, NJ 07052 USA

+1 201.432.0463
Bel.US.CS@belf.com
belfuse.com/circuit-protection

© 2023 Bel Fuse, Inc.

Type 5SF / 5SFP

Temperature Derating Curve

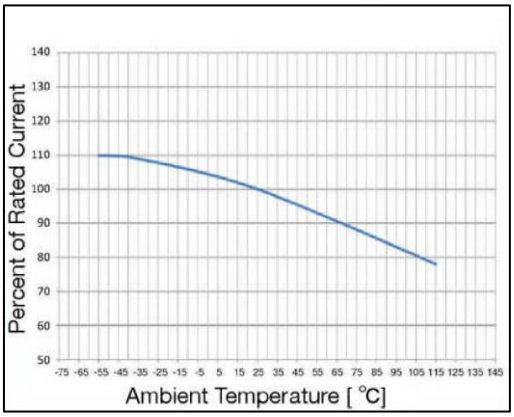

Average Time Current Curve

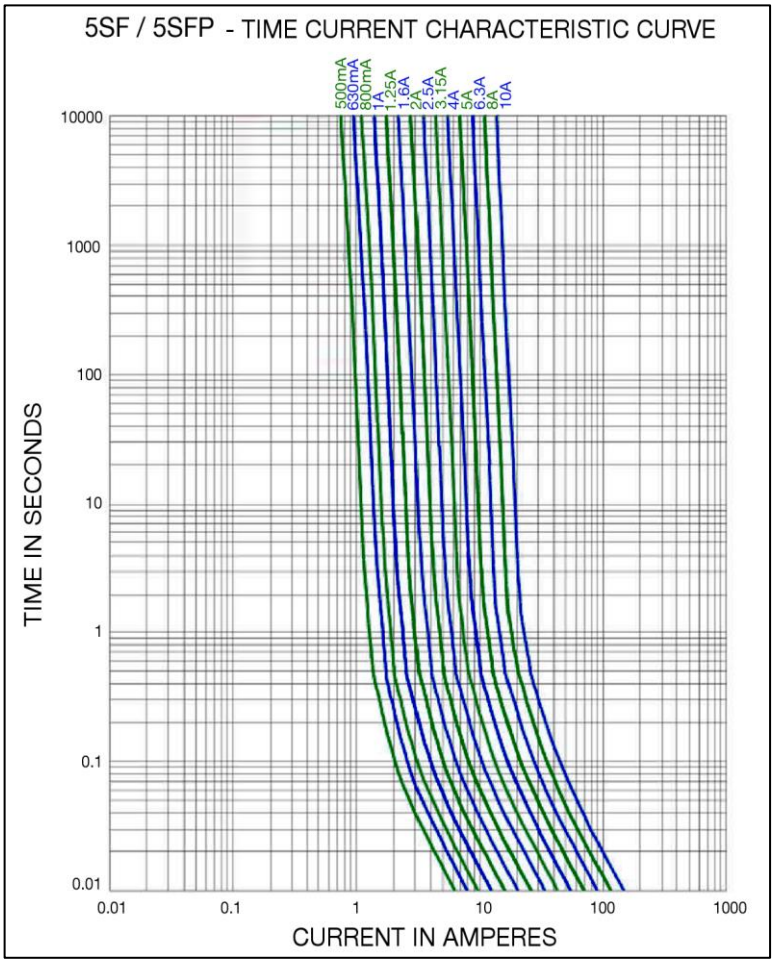

Soldering Parameters

Lead-free Wave Soldering Profile	
Wave Soldering Parameter	
Average ramp-up rate	200℃ / second
Heating rate during preheat	typical 1 - 2℃ / second Max 4℃ / second
Final preheat temperature	within 125℃ of soldering temperature
Peak temperature Tp	260℃
Time within +0℃ / -5℃ of actual peak temperature	10 seconds
Ramp-down rate	5℃ / second max.

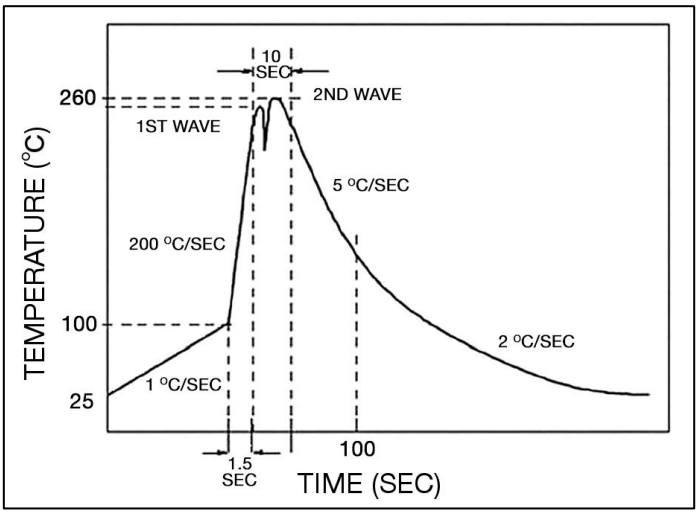

Bel Fuse Inc.
300 Executive Drive, Suite 300,
West Orange, NJ 07052 USA

+1 201.432.0463
Bel.US.CS@belf.com
belfuse.com/circuit-protection

© 2023 Bel Fuse, Inc.

Type 5SF / 5SFP

Fuse FGNO Explanation
0651 R [XXXX] -XX
[XXXX]=Ampere Rating; XX=See Ordering Information as below

Fraction	Decimal	Milliamps	Bel FGNO[XXXX]
1/2	.500	500	0500
	.630	630	0630
8/10	.800	800	0800

Fraction	Decimal	Amps	Bel FGNO[XXXX]
	1.0	1	1000
1-1/4	1.25	1.25	1250
	1.60	1.6	1600
	2.0	2	2000
2-1/2	2.5	2.5	2500
	3.15	3.15	3150
	4.0	4	4000
	5.0	5	5000
	6.3	6.3	6300
	8.0	8	8000
		10	9100

Mechanical Dimensions

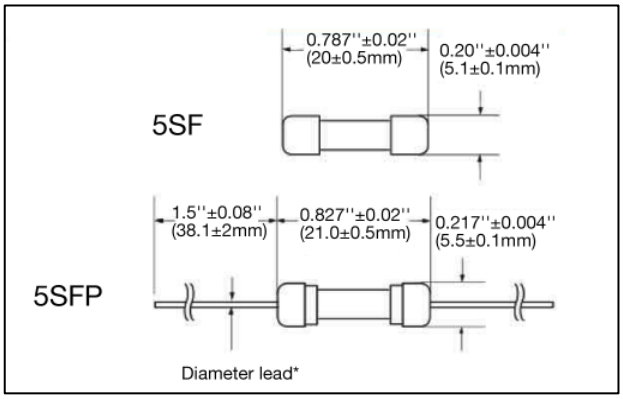

*Ratings 6.3A and less have 0.032"±0.002″ diameter lead;
*Ratings 8A and above have 0.039"±0.002″ diameter lead.

Ordering Information

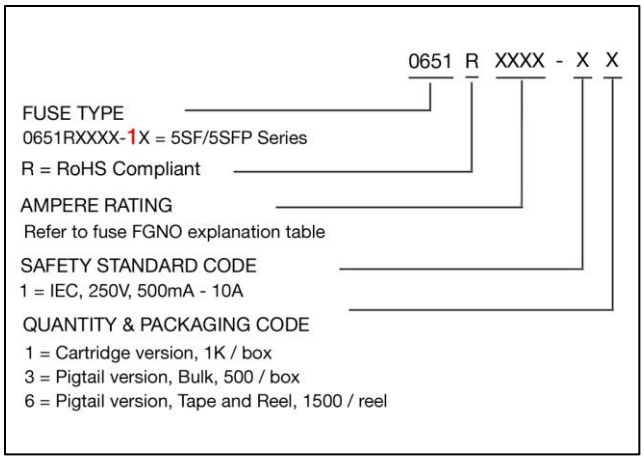

Packaging

Packaging Option	Packaging Specification	Quantity	Packaging Code	Inside Tape Spacing
Bulk	N/A	1000	11	N/A
Bulk (Pigtail Type)	N/A	500	13	N/A
Tape & Reel	EIA-296-F	1500	16	10mm Pitch and 63mm

Bel Fuse Inc.
300 Executive Drive, Suite 300,
West Orange, NJ 07052 USA

+1 201.432.0463
Bel.US.CS@belf.com
belfuse.com/circuit-protection

© 2023 Bel Fuse, Inc.