Type 3AG
Fast Blow Fuse Series

3AG Series, 6x32mm Glass Tube Fast Blow Fuse — RoHS Compliant

Description
6x32mm Fast Blow, glass tube body cartridge fuse designed, approved and complied with UL standard 248-14.

Features
- Meet UL standard 248-14
- Wide operating temperature range
- Bulk packing available
- Full compliance with EU Directive 2011/65/EU and amending directive 2015/863
- Halogen Free
- Lead Free

Applications
Provide individual protection for components or internal circuits.
- Power supplies
- Battery charger
- Monitor
- Adapter

LEAD FREE =
HALOGEN FREE =



Physical Specifications

Materials	Body : Glass
	Cap : Nickel Plated Brass Caps
	Leads : Matte Tin Plated Copper
Marking	On Fuse :
	“bel”, "3AG”, "Current Rating”, “Voltage Rating”,
	”Appropriate Safety Logos”, ” ✓ ”（ RoHS compliant）
	On Label :
	"bel", "3AG", "Current Rating", "Voltage Rating", "Interrupting Rating", "Appropriate Safety Logos" and " ", " "(China RoHS compliant).

Electrical Characteristics

Testing Current	Blow Time	
	Minimum	Maximum
100%	4 hrs.	N/A
135%	N/A	1 hr.
200%	N/A	5 sec

Safety Agency Approvals

Safety Agency	Safety Agency Certificate	Ampere Rating/ Voltage Rating	Ampere Range / Volt @ I.R. ability*
c UL us	E506667	500mA–10A/ 250V AC 12A-15A/ 125V AC	500mA-10A/250V AC@200A 500mA-15A/125V AC@10,000A
*I.R.= Interrupting Rating = Short Circuit Rating(Amps)			

Specifications subject to change without notice

bel

belfuse.com/circuit-protection

Please read our datasheet & drawing disclaimer here.

Environmental Specifications

Shock Resistance	MIL-STD-202G, Method 213B, Test Condition 1 (100 G's peak for 6 milliseconds; Sawtooth waveform)
Vibration Resistance	MIL-STD-202G, Method 201A (10-55 Hz, 0.06 inch, total excursion).
Salt Spray Resistance	MIL-STD-202G, Method 101E, Test Condition B (48 hrs).
Insulation Resistance	MIL-STD-202G, Method 302, Test Condition A (After Opening) 10,000 ohms minimum.
Solderability	MIL-STD-202G, Method 208H
Resistance to solder Heat	MIL-STD-202G, Method 210F, Test Condition B (260+/-5℃,10+/-1 sec)
Thermal Shock	MIL-STD-202G, Method 107G, Test Condition B (-65℃ to +125℃).
Operating Temperature	-55℃ to +125℃
Terminal Strength	IEC-68-2-21

Electrical Specifications

Catalog Number	Ampere Rating	Typical Cold Resistance (ohms)	Volt-drop @100%In (Volt) max.	Voltage and Interrupting Ratings	Melting I²T <10 mSec (A² Sec)	Melting I²T @10 In (A² Sec)	Maximum Power Dissipation (W)	Agency Approvals
3AG 500-R	500mA	1.19	3.17	See Table of Safety Approvals on Page 1 for Voltage and associated Interrupting Ratings	0.14	0.11	1.88	Y
3AG 750-R	750mA	0.66	2.54		0.19	0.17	2.15	Y
3AG 1-R	1A	0.155	0.28		1.4	1.4	0.37	Y
3AG 1.25-R	1.25A	0.114	0.27		2.4	2.5	0.44	Y
3AG 1.6-R	1.6A	0.085	0.27		4.2	4.4	0.51	Y
3AG 2-R	2A	0.057	0.22		7.2	7.6	0.59	Y
3AG 2.5-R	2.5A	0.043	0.21		12	13	0.70	Y
3AG 3-R	3A	0.033	0.17		21	23	0.83	Y
3AG 3.5-R	3.5A	0.027	0.18		28	31	0.91	Y
3AG 4-R	4A	0.024	0.17		36	40	1.00	Y
3AG 5-R	5A	0.018	0.16		63	70	1.20	Y
3AG 6-R	6A	0.014	0.15		107	123	1.40	Y
3AG 7-R	7A	0.012	0.16		141	162	1.60	Y
3AG 8-R	8A	0.010	0.15		184	214	1.70	Y
3AG 10-R	10A	0.008	0.13		316	372	2.00	Y
3AG 12-R	12A	0.006	0.13		501	597	2.40	Y
3AG 15-R	15A	0.005	0.13		1400	1500	1.80	Y

Consult manufacturer for other ratings

Bel Fuse Inc.
300 Executive Drive, Suite 300,
West Orange, NJ 07052 USA

+1 201.432.0463
Bel.US.CS@belf.com
belfuse.com/circuit-protection

© 2026 Bel Fuse, Inc.

Temperature Derating Curve

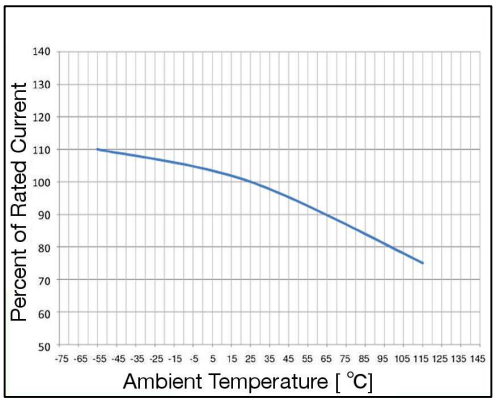

Average Time Current Curve

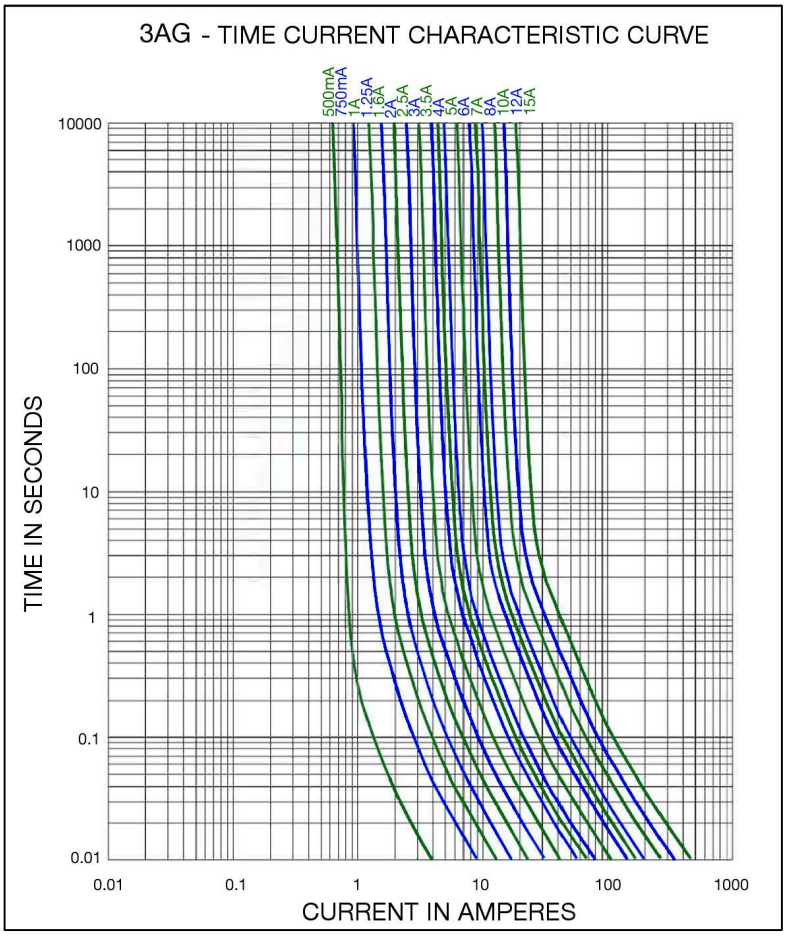

Soldering Parameters

Lead-free Wave Soldering Profile	
Wave Soldering Parameter	
Average ramp-up rate	200℃ / second
Heating rate during preheat	typical 1 - 2℃ / second Max 4℃ / second
Final preheat temperature	within 125℃ of soldering temperature
Peak temperature Tp	260℃
Time within +0℃ / -5℃ of actual peak temperature	10 seconds
Ramp-down rate	5℃ / second max.

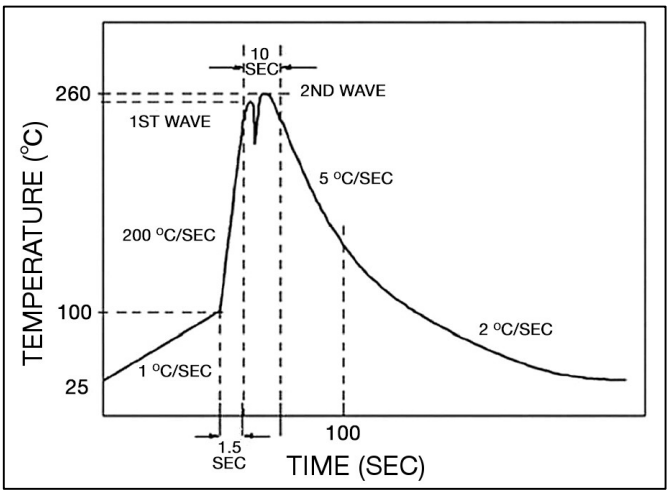

Bel Fuse Inc.
300 Executive Drive, Suite 300,
West Orange, NJ 07052 USA

+1 201.432.0463
Bel.US.CS@belf.com
belfuse.com/circuit-protection

© 2026 Bel Fuse, Inc.

Fuse FGNO Explanation
06X1 R [XXXX] -XX
0601R=3AG; [XXXX]=Ampere Rating; XX=See Ordering Information as below

Fraction	Decimal	Milliamps	Bel FGNO[XXXX]
1/2	.500	500	0500
3/4	.750	750	0750

Fraction	Decimal	Amps	Bel FGNO[XXXX]
	1.0	1	1000
1-1/4	1.25	1.25	1250
	1.60	1.6	1600
	2.0	2	2000
2-1/2	2.5	2.5	2500
	3.0	3	3000
3-1/2	3.5	3.5	3500
	4.0	4	4000
	5.0	5	5000
	6.0	6	6000
	7.0	7	7000
	8.0	8	8000
		10	9100
		12	9120
		15	9150

Mechanical Dimensions

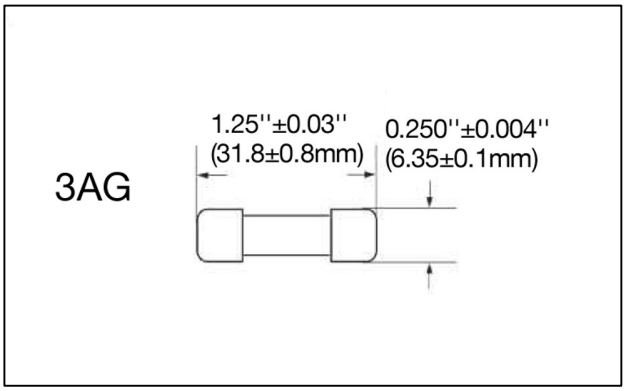

Ordering Information

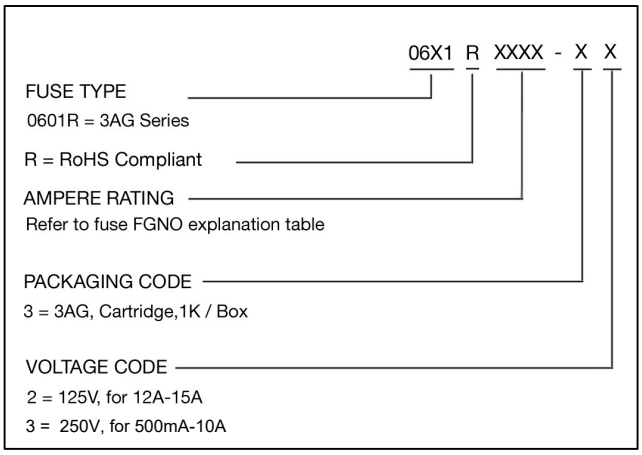

Packaging

Packaging Option	Packaging Specification	Quantity	Packaging Code	Inside Tape Spacing
Bulk	N/A	1000	33 / 32	N/A

Specifications subject to change without notice

Bel Fuse Inc.
300 Executive Drive, Suite 300,
West Orange, NJ 07052 USA

+1 201.432.0463
Bel.US.CS@belf.com
belfuse.com/circuit-protection

© 2026 Bel Fuse, Inc.